This is a digital copy of a book that was preserved for generations on library shelves before it was carefully scanned by Google as part of a project to make the world's books discoverable online.

It has survived long enough for the copyright to expire and the book to enter the public domain. A public domain book is one that was never subject to copyright or whose legal copyright term has expired. Whether a book is in the public domain may vary country to country. Public domain books are our gateways to the past, representing a wealth of history, culture and knowledge that's often difficult to discover.

Marks, notations and other marginalia present in the original volume will appear in this file - a reminder of this book's long journey from the publisher to a library and finally to you.

Usage guidelines

Google is proud to partner with libraries to digitize public domain materials and make them widely accessible. Public domain books belong to the public and we are merely their custodians. Nevertheless, this work is expensive, so in order to keep providing this resource, we have taken steps to prevent abuse by commercial parties, including placing technical restrictions on automated querying.

We also ask that you:

+ *Make non-commercial use of the files* We designed Google Book Search for use by individuals, and we request that you use these files for personal, non-commercial purposes.
+ *Refrain from automated querying* Do not send automated queries of any sort to Google's system: If you are conducting research on machine translation, optical character recognition or other areas where access to a large amount of text is helpful, please contact us. We encourage the use of public domain materials for these purposes and may be able to help.
+ *Maintain attribution* The Google "watermark" you see on each file is essential for informing people about this project and helping them find additional materials through Google Book Search. Please do not remove it.
+ *Keep it legal* Whatever your use, remember that you are responsible for ensuring that what you are doing is legal. Do not assume that just because we believe a book is in the public domain for users in the United States, that the work is also in the public domain for users in other countries. Whether a book is still in copyright varies from country to country, and we can't offer guidance on whether any specific use of any specific book is allowed. Please do not assume that a book's appearance in Google Book Search means it can be used in any manner anywhere in the world. Copyright infringement liability can be quite severe.

About Google Book Search

Google's mission is to organize the world's information and to make it universally accessible and useful. Google Book Search helps readers discover the world's books while helping authors and publishers reach new audiences. You can search through the full text of this book on the web at `http://books.google.com/`

VE RI TAS

HARVARD LAW SCHOOL
LIBRARY

81

UNITED STATES CIRCUIT COURTS OF APPEALS REPORTS

June 21

WITH ANNOTATIONS

WITH TABLE OF CASES IN THE UNITED STATES CIRCUIT COURTS OF APPEALS WHICH HAVE BEEN PASSED UPON BY THE SUPREME COURT OF THE UNITED STATES, AND TABLE OF CASES IN THE UNITED STATES CIRCUIT COURTS OF APPEALS IN WHICH REHEARINGS HAVE BEEN GRANTED OR DENIED.

172-173 F.d

VOLUME 97

LAWYERS' CO-OPERATIVE PUBLISHING CO.
ROCHESTER
1910

COPYRIGHT, 1910
BY
LAWYERS' CO-OPERATIVE PUBLISHING CO.

(97 C.C.A.)

MAY 5 1910

JUDGES

OF THE

UNITED STATES CIRCUIT COURTS OF APPEALS AND THE CIRCUIT AND DISTRICT COURTS.

FIRST CIRCUIT.

Hon. OLIVER WENDELL HOLMES, Circuit Justice.....Washington, D. C.
Hon. LE BARON B. COLT, Circuit Judge.....Providence, R. I.
Hon. WILLIAM L. PUTNAM, Circuit Judge.....Portland, Me.
Hon. FRANCIS C. LOWELL, Circuit Judge.....Boston, Mass.
Hon. CLARENCE HALE, District Judge, Maine.....Portland, Me.
Hon. FREDERIC DODGE, District Judge, Massachusetts.....Boston, Mass.
Hon. EDGAR ALDRICH, District Judge, New Hampshire.....Littleton, N. H.
Hon. ARTHUR L. BROWN, District Judge, Rhode Island.....Providence, R. I.

SECOND CIRCUIT.

Hon. RUFUS W. PECKHAM, Circuit Justice [1].....Washington, D. C.
Hon. HORACE H. LURTON, Circuit Justice [2].....Washington, D. C.
Hon. E. HENRY LACOMBE, Circuit Judge.....New York, N. Y.
Hon. ALFRED C. COXE, Circuit Judge.....Utica, N. Y.
Hon. HENRY G. WARD, Circuit Judge.....New York, N. Y.
Hon. WALTER C. NOYES, Circuit Judge.....New London, Conn.
Hon. JAMES P. PLATT, District Judge, Connecticut.....Hartford, Conn.
Hon. THOMAS I. CHATFIELD, District Judge, E. D. New York.....Brooklyn, N. Y.
Hon. GEORGE W. RAY, District Judge, N. D. New York.....Norwich, N. Y.
Hon. GEORGE B. ADAMS, District Judge, S. D. New York.....New York, N. Y.
Hon. GEORGE C. HOLT, District Judge, S. D. New York.....New York, N. Y.
Hon. CHARLES M. HOUGH, District Judge, S. D. New York.....New York, N. Y.
Hon. LEARNED HAND, District Judge, S. D. New York.....New York, N. Y.
Hon. JOHN R. HAZEL, District Judge, W. D. New York.....Buffalo, N. Y.
Hon. JAMES L. MARTIN, District Judge, Vermont.....Brattleboro, Vt.

THIRD CIRCUIT.

Hon. WILLIAM H. MOODY, Circuit Justice.....Washington, D. C.
Hon. WILLIAM M. LANNING, Circuit Judge, New Jersey.....Trenton, N. J.
Hon. GEORGE GRAY, Circuit Judge.....Wilmington, Del.
Hon. JOSEPH BUFFINGTON, Circuit Judge.....Pittsburg, Pa.
Hon. EDWARD G. BRADFORD, District Judge, Delaware.....Wilmington, Del.
Hon. JOHN RELLSTAB, District Judge, New Jersey.....Trenton, N. J.
Hon. JOSEPH CROSS, District Judge, New Jersey.....Elizabeth, N. J.

[1] Died October 24, 1909.

[2] Appointed to succeed Rufus W. Peckham, deceased.

Hon. JOHN B. McPHERSON, District Judge, E. D. Pennsylvania.....Philadelphia, Pa.
Hon. JAMES B. HOLLAND, District Judge, E. D. Pennsylvania.....Philadelphia, Pa.
Hon. ROBERT WODROW ARCHBALD, District Judge, M. D. Pennsylvania..Scranton, Pa.
Hon. JAMES S. YOUNG, District Judge, W. D. Pennsylvania.....Pittsburg, Pa.
Hon. CHARLES P. ORR, District Judge, W. D. Pensylvania.....Pittsburg, Pa.

FOURTH CIRCUIT.

Hon. MELVILLE W. FULLER, Circuit Justice.....Washington, D. C.
Hon. NATHAN GOFF, Circuit Judge.....Clarksburg, W. Va.
Hon. JETER C. PRITCHARD, Circuit Judge.....Asheville, N. C.
Hon. THOMAS J. MORRIS, District Judge, Maryland.....Baltimore, Md.
Hon. HENRY G. CONNOR, District Judge, E. D. North Carolina.....Wilson, N. C.
Hon. JAMES E. BOYD, District Judge, W. D. North Carolina.....Greensboro, N. C.
Hon. WILLIAM H. BRAWLEY, District Judge, E. and W. D. South Car...Charleston, S. C.
Hon. EDMUND WADDILL, Jr., District Judge, E. D. Virginia.....Richmond, Va.
Hon. HENRY CLAY McDOWELL, District Judge, W. D. Virginia.....Lynchburg, Va.
Hon. ALSTON G. DAYTON, District Judge, N. D. West Virginia.....Philippi, W. Va.
Hon. BENJAMIN F. KELLER, District Judge, S. D. West Virginia.....Charleston, W. Va.

FIFTH CIRCUIT.

Hon. EDWARD D. WHITE, Circuit Justice.....Washington, D. C.
Hon. DON A. PARDEE, Circuit Judge.....Atlanta, Ga.
Hon. A. P. McCORMICK, Circuit Judge.....Dallas, Tex.
Hon. DAVID D. SHELBY, Circuit Judge.....Huntsville, Ala.
Hon. THOMAS G. JONES, District Judge, N. and M. D. Alabama.....Montgomery, Ala.
Hon. WM. I. GRUBB, District Judge, N. D. Alabama.....Birmingham, Ala.
Hon. HARRY T. TOULMIN, District Judge, S. D. Alabama.....Mobile, Ala.
Hon. WM. B. SHEPPARD, District Judge, N. D. Florida.....Pensacola, Fla.
Hon. JAMES W. LOCKE, District Judge, S. D. Florida.....Jacksonville, Fla.
Hon. WILLIAM T. NEWMAN, District Judge, N. D. Georgia.....Atlanta, Ga.
Hon. EMORY SPEER, District Judge, S. D. Georgia.....Macon, Ga.
Hon. RUFUS E. FOSTER, District Judge, E. D. Louisiana.....New Orleans, La.
Hon. ALECK BOARMAN, District Judge, W. D. Louisiana.....Shreveport, La.
Hon. HENRY C. NILES, District Judge, N. and S. D. Mississippi.....Kosciusko, Miss.
Hon. DAVID E. BRYANT, District Judge, E. D. Texas.....Sherman, Tex.
Hon. EDWARD R. MEEK, District Judge, N. D. Texas.....Dallas, Tex.
Hon. WALLER T. BURNS, District Judge, S. D. Texas.....Houston, Tex.
Hon. THOMAS S. MAXEY, District Judge, W. D. Texas.....Austin, Tex.

SIXTH CIRCUIT.

Hon. JOHN M. HARLAN, Circuit Justice.....Washington, D. C.
Hon. HORACE H. LURTON, Circuit Judge.....Nashville, Tenn.
Hon. HENRY F. SEVERENS, Circuit Judge.....Kalamazoo, Mich.
Hon. JOHN K. RICHARDS, Circuit Judge.....Cincinnati, Ohio.
Hon. JOHN W. WARRINGTON, Circuit Judge.....Cincinnati, Ohio.
Hon. ANDREW M. J. COCHRAN, District Judge, E. D. Kentucky.....Maysville, Ky.
Hon. WALTER EVANS, District Judge, W. D. Kentucky.....Louisville, Ky.
Hon. HENRY H. SWAN, District Judge, E. D. Michigan.....Detroit, Mich.
Hon. LOYAL E. KNAPPEN, District Judge, W. D. Michigan.....Grand Rapids, Mich.
Hon. ROBERT W. TAYLER, District Judge, N. D. Ohio.....Cleveland, Ohio.
Hon. ALBERT C. THOMPSON, District Judge, S. D. Ohio.....Cincinnati, Ohio.
Hon. JOHN E. SATER, District Judge, S. D. Ohio.....Columbus, Ohio.
Hon. EDWARD T. SANFORD, District Judge, E. and M. D. Tennessee....Knoxville, Tenn.
Hon. JOHN E. McCALL, District Judge, W. D. Tennessee.....Memphis, Tenn.

SEVENTH CIRCUIT.

Hon. WILLIAM R. DAY, Circuit Justice.....Washington, D. C.
Hon. PETER S. GROSSCUP, Circuit Judge.....Chicago, Ill.
Hon. FRANCIS E. BAKER, Circuit Judge.....Indianapolis, Ind.
Hon. WILLIAM H. SEAMAN, Circuit Judge.....Sheboygan, Wis.
Hon. CHRISTIAN C. KOHLSAAT, Circuit Judge.....Chicago, Ill.
Hon. KENESAW M. LANDIS, District Judge, N. D. Illinois.....Chicago, Ill.
Hon. GEORGE A. CARPENTER, District Judge, N. D. Illinois[8].....Chicago, Ill.
Hon. FRANCIS M. WRIGHT, District Judge, E. D. Illinois.....Urbana, Ill.
Hon. J. OTIS HUMPRHEY, District Judge, S. D. Illinois.....Springfield, Ill.
Hon. ALBERT B. ANDERSON, District Judge, Indiana.....Indianapolis, Ind.
Hon. JOSEPH V. QUARLES, District Judge, E. D. Wisconsin.....Milwaukee, Wis.
Hon. ARTHUR L. SANBORN, District Judge, W. D. Wisconsin.....Madison, Wis.

EIGHTH CIRCUIT.

Hon. DAVID J. BREWER, Circuit Justice.....Washington, D. C.
Hon. WALTER H. SANBORN, Circuit Judge.....St. Paul, Minn.
Hon. WILLIS VAN DEVANTER, Circuit Judge.....Cheyenne, Wyo.
Hon. WILLIAM C. HOOK, Circuit Judge.....Leavenworth, Kan.
Hon. ELMER B. ADAMS, Circuit Judge.....St. Louis, Mo.
Hon. JACOB TRIEBER, District Judge, E. D. Arkansas.....Little Rock, Ark.
Hon. JOHN H. ROGERS, District Judge, W. D. Arkansas.....Ft. Smith, Ark.
Hon. ROBERT E. LEWIS, District Judge, Colorado.....Denver, Colo.
Hon. HENRY THOMAS REED, District Judge, N. D. Iowa.....Cresco, Iowa.
Hon. SMITH McPHERSON, District Judge, S. D. Iowa.....Red Oak, Iowa.
Hon. JOHN C. POLLOCK, District Judge, Kansas.....Topeka, Kan.
Hon. CHAS. A. WILLARD, District Judge, Minnesota.....Minneapolis, Minn.
Hon. PAGE MORRIS, District Judge, Minnesota.....Duluth, Minn.
Hon. DAVID P. DYER, District Judge, E. D. Missouri.....St. Louis, Mo.
Hon. JOHN F. PHILIPS, District Judge, W. D. Missouri.....Kansas City, Mo.
Hon. W. H. MUNGER, District Judge, Nebraska.....Omaha, Neb.
Hon. THOMAS C. MUNGER, District Judge, Nebraska.....Lincoln, Neb.
Hon. CHARLES F. AMIDON, District Judge, North Dakota.....Fargo, N. D.
Hon. RALPH E. CAMPBELL, District Judge, E. Oklahoma.....Muskogee, Okl.
Hon. JOHN H. COTTERAL, District Judge, W. Oklahoma.....Guthrie, Okl.
Hon. JOHN E. CARLAND, District Judge, South Dakota.....Sioux Falls, S. D.
Hon. JOHN A. MARSHALL, District Judge, Utah.....Salt Lake City, Utah.
Hon. JOHN A. RINER, District Judge, Wyoming.....Cheyenne, Wyo.

NINTH CIRCUIT.

Hon. JOSEPH McKENNA, Circuit Justice.....Washington, D. C.
Hon. WILLIAM B. GILBERT, Circuit Judge.....Portland, Or.
Hon. WM. W. MORROW, Circuit Judge.....San Francisco, Cal.
Hon. ERSKINE M. ROSS, Circuit Judge.....Los Angeles, Cal.
Hon. WM. C. VAN FLEET, District Judge, N. D. California.....San Francisco, Cal.
Hon. JOHN J. DE HAVEN, District Judge, N. D. California.....San Francisco, Cal.
Hon. OLIN WELLBORN, District Judge, S. D. California.....Los Angeles, Cal.
Hon. FRANK S. DIETRICH, District Judge, Idaho.....Boise, Idaho.
Hon. WILLIAM H. HUNT, District Judge, Montana.....Helena, Mont.
Hon. EDWARD S. FARRINGTON, District Judge, Nevada.....Carson City, Nev.
Hon. CHARLES E. WOLVERTON, District Judge, Oregon.....Portland, Or.
Hon. ROBERT S. BEAN, District Judge, Oregon.....Portland, Or.
Hon. EDWARD WHITSON, District Judge, E. D. Washington.....Spokane, Wash.
Hon. CORNELIUS H. HANFORD, District Judge, W. D. Washington.....Seattle, Wash.
Hon. GEORGE DONWORTH, District Judge, W. D. Washington.....Seattle, Wash.

[8] Appointed Jan. 11, 1910, to succeed Solomon H. Bethea, deceased.

CASES REPORTED.

Page

A. Leschen & Sons Rope Co. v. Mayflower Gold Mining & Reduction Co. 465
Allen, Freeding v. 429
American Knit Goods Mfg. Co., In re 486
American Smelting & Refining Co. v. Karapa 517
American Trust Co. v. W. & A. Fletcher Co. 477
Angle v. United States 184
Arkansas Brokerage Co. v. Dunn & Powell 454
Arkansas Valley Sugar Beet & Irrigated Land Co. v. Ft. Lyon Canal Co. 551
Armour & Co., Continental Oil & Cotton Co. v. 667
Atchison, T. & S. F. R. Co. v. Sullivan 1
Aubin, Carter Rice & Co. v. 274

Bacon v. Conroy 158
Baglin v. Cusenier Co. 666
Baldi v. Cedar Hill Coal & Coke Co. 505
Baralong, The 24
Baruch v. United States 40
Bass v. Forest Products & Mfg. Co. 666
Bates Mach. Co., William A. Force & Co. v. 671
Berwind-White Coal Min. Co. v. W. & A. Fletcher Co. 477
Best Mfg. Co., Holt Mfg. Co. v. 107
Bodek, Skubinsky v. 38
Bodek, Skubinsky v. 116
Bothe, In re 547
Brod v. J. K. Orr Shoe Co. 667
Brookfield, Novelty Glass Mfg. Co. v. 25
Brosnan, Eastern Oregon Land Co. v. 382
Bull v. United States Shipping Co. 364

Page

C. A. Hoover Distilling Co., Mechanics' Ins. Co. of Philadelphia v. 400
California Development Co., New Liverpool Salt Co. v. (two cases) 242
California Development Co. v. New Liverpool Salt Co. 214
Canadian Northern R. Co. v. Walker 44
Capewell Horse Nail Co. v. Mooney 248
Carroll, Los Alamitos Sugar Co. v. 446
Carter Rice & Co. v. Aubin 274
Cartwright, Lilienthal v. 530
Castle, Missouri Pac. R. Co. v. 124
Cate v. Connell 647
Cedar Hill Coal & Coke Co., Baldi v. 505
Central Coal & Coke Co. v. Penny 600
Central Coal & Coke Co. v. Williams 597
Chaddock & Co., United States Consol. Seeded Raisin Co. v. 527
Charles E. Matthews, The 667
Chicago Grain Door Co. v. National Malleable Castings Co. 324
Chicago, I. & L. R. Co. v. Davis .. 281
Chicago, St. P., M. & O. R. Co., Latta v. 198
Cincinnati Traction Co., North American Ry. Const. Co. v. 32
City of Helena v. Helena Waterworks Co. 320
City of Pomona, Sunset Telephone & Telegraph Co. v. 251
Cleveland, C., C. & St. L. R. Co., George A. Shaw & Co. v. 520
Colonial Trust Co. v. Montello Brick Works 144
Colorado & S. R. Co. v. Tucker 555
Commercial Pacific Cable Co. v. Pacific Mail S. S. Co. 346
Commonwealth Nat. Bank v. Fidelity & Deposit Co. of Maryland 667

Page
Connell, Cate v. 647
Conroy, Bacon v. 158
Consumers' Lignite Co., Texas Cannel Coal Co. v. 669
Continental Oil & Cotton Co. v. Armour & Co. 667
Cucharas Min. Co., El Cambio Gold Min. Co. v. 64
Cusack, Knickerbocker Steamboat Co. v. 56
Cusenier Co., Baglin v. 666

Dale v. Denver City Tramway Co. 511
Davis, Chicago, I. & L. R. Co. v. 281
Delaware & H. Co. v. Flannelly.. 112
Dempster, In re. 51
Dempster v. Waters-Pierce Oil Co. 51
Denver City Tramway Co., Dale v. 511
Dickinson v. Matheson Motor Car Co. 29
Dunne, United States v. 420
Dunn & Powell, Arkansas Brokerage Co. v. 454

Eastern Oregon Land Co. v. Brosnan 382
Eastern Oregon Land Co. v. Simpson 382
East Riverside Water Co., Riverside Trust Co. v. 407
Edda, The 638
El Cambio Gold Min. Co. v. Cucharas Min. Co. 64
Erbaugh v. United States 663
Erie R. Co. v. Schultz 573
Eugene F. Moran, The 667

Faber Sulky Co., Philips v. 668
F. B. Vandegrift & Co. v. United States 469
Fidelity & Deposit Co. of Maryland, Commonwealth Nat. Bank v. 667
Flannelly, Delaware & H. Co. v. 112
Fletcher Co., American Trust Co. v. 477
Fletcher Co., Berwind-White Coal Min. Co. v. 477
Folmina, The 557
Foo Duck, United States v. 204
Force & Co. v. Bates Mach. Co... 671
Forest Products & Mfg. Co., Bass v. 666

Page
Ft. Lyon Canal Co., Arkansas Valley Sugar Beet & Irrigated Land Co. v. 551
Fowler & Wolfe Mfg. Co. v. National Radiator Co. 187
Freeding v. Allen 429

General Electric Co. v. Smith.... 514
George A. Shaw & Co. v. Cleveland, C., C. & St. L. R. Co.... 520
Ghazee, The 66
Globe Asphalt Co., Union Development & Construction Co. v.... 650
Graham v. Peale, Peacock & Kerr of New York 311
Griffin Wheel Co. v. Smith 411

Hachey, Maine & N. H. Granite Corp. v. 508
Hastorf v. O'Brien 606
Hauger v. United States 372
Havre Hotel Co., Kellogg-Mackey-Cameron Co. v. 415
Hawthorne, Mound Mines Co. v... 394
Helena v. Helena Waterworks Co. 320
Helena Waterworks Co., City of Helena v. 320
Hemple, Stamey v. 379
Hennebique Const. Co. v. Myers.. 289
Hicks Locomotive & Car Works, Womack v. 35
Hogue v. United States 668
Holeproof Hosiery Co. v. Wallach Bros. 263
Holt Mfg. Co. v. Best Mfg. Co... 107
Hoover Distilling Co., Mechanics' Ins. Co. of Philadelphia v.... 400
Houston Oil Co. of Texas v. Pollard 668
Howe v. Meriwether 288

Ibex Min. Co., Van Sice v. 587
Illinois Cent. R. Co. v. Nelson... 331
International Coal Min. Co. v. Pennsylvania R. Co. 383

James McWilliams, The 277
J. K. Orr Shoe Co., Brod v. 667
Johnson, Tremont Coal & Coke Co. v. 207
Johnson v. Willapa Lumber Co. 494

Karapa, American Smelting & Refining Co. v. 517

Page
Kellogg-Mackay-Cameron Co. v. Havre Hotel Co. 415
Kessler & Co., Sexton v. 161
Knickerbocker Steamboat Co. v. Cusack 56

Ladd, Metropolitan Securities Co. v. 435
Lancaster Electric Light, Heat & Power Co. v. Platt Iron Works Co. 148
Latta v. Chicago, St. P., M. & O. R. Co. 198
Law Co., T. W. & C. B. Sheridan Co. v. 27
Lechenger, United States v. 670
Lehigh Val. R. Co. v. Providence Washington Ins. Co. 62
Leschen & Sons Rope Co. v. Mayflower Gold Mining & Reduction Co. 465
Lilienthal v. Cartwright 530
Los Alamitos Sugar Co. v. Carroll 446
Louisville & N. R. Co. v. Womack 559
Lytle Logging & Mercantile Co., Saveljich v. 443

McGrew, Rice v. 669
McKinnon, Metropolitan Trust Co. of New York v. 194
McWilliams, The James 277
Maine & N. H. Granite Corp. v. Hachey 508
Marshall, Patton v. 610
Mason v. National Herkimer County Bank of Little Falls 155
Matheson Motor Car Co., Dickinson v. 29
Matthews, The Charles E. 667
Mayflower Gold Mining & Reduction Co., A. Leschen & Sons Rope Co. v. 465
Mechanics' Ins. Co. of Philadelphia v. C. A. Hoover Distilling Co. 400
Merchants'-Laclede Nat. Bank of St. Louis, Remmers v. 490
Merchant & Evans Co., Walker Roofing & Heating Co. v. 495
Meriwether, Howe v. 288
Metropolitan Securities Co. v. Ladd 435
Metropolitan Trust Co. of New York v. McKinnon 194

Page
Minneapolis, St. P. & S. S. M. R. Co. v. Stevenson 286
Minot v. Snavely 30
Missouri Pac. R. Co. v. Castle ... 124
Montello Brick Works, Colonial Trust Co. v. 144
Mooney, Capewell Horse Nail Co. v. 248
Moran, The Eugene F. 667
Morris, Texas & P. R. Co. v. 670
Mound Mines Co. v. Hawthorne .. 394
Myers, Hennebique Const. Co. v. 289

National Cash Register Co. v. Salling 334
National Dump Car Co. v. Ralston Steel Car Co. 91
National Herkimer County Bank of Little Falls, Mason v. 155
National Malleable Castings Co., Chicago Grain Door Co. v. 324
National Radiator Co., Fowler & Wolfe Mfg. Co. v. 187
Nelson, Illinois Cent. R. Co. v. ... 331
New Liverpool Salt Co., California Development Co. v. 214
New Liverpool Salt Co. v. California Development Co. (two cases) 242
New York City R. Co., Pennsylvania Steel Co. v. 185
North American Ry. Const. Co. v. Cincinnati Traction Co. 32
Northern Pac. R. Co., Winfree v. 392
Novelty Glass Mfg. Co. v. Brookfield 25

Oakes v. United States 139
O'Brien, Hastorf v. 606
Orr Shoe Co., Brod v. 667

Pacific Mail S. S. Co. v. Commercial Pacific Cable Co. 346
Patton v. Marshall 610
Peale, Peacock & Kerr of New York, Graham v. 311
Pelletier, Wellington v. 458
Pennebaker, Thompson Co. v. 591
Pennsylvania R. Co. v. International Coal Min. Co. 383
Pennsylvania Steel Co. v. New York City R. Co. 185
Penny, Central Coal & Coke Co. v. 600
Philips v. Faber Sulky Co. 668

Page
Platt Iron Works Co., Lancaster Electric Light, Heat & Power Co. v. 148
Pollard, Houston Oil Co. of Texas v. 668
Pomona, Sunset Telephone & Telegraph Co. v. 251
Providence Washington Ins. Co., Lehigh Val. R. Co. v. 62

Ralston Steel Car Co., National Dump Car Co. v. 91
Remmers v. Merchants'-Laclede Nat. Bank of St. Louis 490
Renigar v. United States 172
Rice v. McGrew 669
Rice & Co. v. Aubin 274
Riverside Trust Co. v. East Riverside Water Co. 407
Robert O. Law Co., T. W. & C. B. Sheridan Co. v. 27
Rountree, Weir v. 500
Rovello, Sanger v. 669
Rudd v. United States 462
Rumsey, Traders' Nat. Bank v. 670

St. Louis & S. F. R. Co., Simerson v. 618
St. Louis & S. F. R. Co. v. Summers 328
Salling, National Cash Register Co. v. 334
Salton Sea Cases, The 214
Salton Sea Cases, The 242
Sanger v. Rovello 669
Saveljich v. Lytle Logging & Mercantile Co. 443
Schultz, Erie R. Co. v. 573
Scows 15D and 18D, The 667
Seneca, The 68
Sexton v. Kessler & Co. 161
Shaw & Co. v. Cleveland, C., C. & St. L. R. Co. 520
Sheridan Co. v. Robert O. Law Co. 27
Simerson v. St. Louis & S. F. R. Co. 618
Simpson, Eastern Oregon Land Co. v. 382
Skubinský v. Bodek 38
Skubinsky v. Bodek 116
Smith, General Electric Co. v. 514
Smith, Griffin Wheel Co. v. 411
Snavely, Minot v. 30
Stamey v. Hemple 879

Page
Steinman, United States v. 271
Stevenson, Minneapolis, St. P. & S. S. R. Co. v. 286
Sullivan, Atchison, T. & S. F. R. Co. v. 1
Summers, St. Louis & S. F. R. Co. v. 328
Sunset Telephone & Telegraph Co. v. City of Pomona 251

Texas Cannel Coal Co. v. Consumers' Lignite Co. 669
Texas & P. R. Co. v. Morris 670
Thomas v. Woods 535
Thompson Co. v. Pennebaker 591
Thrasher, The 424
Toledo, P. C. & L. R. Co., Westinghouse Electric & Mfg. Co. v. 69
Tracy, The William 280
Traders' Nat. Bank v. Rumsey 670
Tremont Coal & Coke Co. v. Johnson 207
Tucker, Colorado & S. R. Co. v. 555
T. W. & C. B. Sheridan Co. v. Robert O. Law Co. 27

Union Development & Construction Co. v. Globe Asphalt Co. 650
Union Pac. Coal Co. v. United States 578
United States, Angle v. 184
United States, Baruch v. 40
United States v. Dunne 420
United States, Erbaugh v. 663
United States, F. B. Vandegrift & Co. v. 469
United States v. Foo Duck 204
United States, Hauger v. 372
United States, Hogue v. 668
United States v. Lechenger 670
United States, Oakes v. 139
United States, Renigar v. 172
United States, Rudd v. 462
United States v. Steinman 271
United States, Union Pac. Coal Co. v. 578
United States, Wabash R. Co. v. 284
United States Consol. Seeded Raisin Co. v. Chaddock & Co. 527
United States Shipping Co., Bull v. 364

Vandegrift & Co. v. United States 469
Van Sice v. Ibex Min. Co. 587

Page
Wabash R. Co. v. United States.. 284
Wagner Electric & Mfg. Co., Westinghouse Electric & Mfg. Co. v..... 621
Walker, Canadian Northern R. Co. v..... 44
Walker Roofing & Heating Co. v. Merchant & Evans Co..... 495
Wallach Bros., Holeproof Hosiery Co. v..... 263
Waters-Pierce Oil Co., Dempster v. 51
Weir v. Rountree..... 500
Wellington v. Pelletier..... 458
Westinghouse Electric & Mfg. Co. v. Toledo, P. C. & L. R. Co.... 69
Westinghouse Electric & Mfg. Co. v. Wagner Electric & Mfg. Co. 621
Willapa Lumber Co., Johnson v... 494
William A. Force & Co. v. Bates Mach. Co..... 671
Williams, Central Coal & Coke Co. v. 597
William Tracy, The..... 280
Winfree v. Northern Pac. R. Co... 392
Womack v. Hicks Locomotive & Car Works..... 35
Womack, Louisville & N. R. Co. v. 559
Woods, Thomas v..... 535
W. & A. Fletcher Co., American Trust Co. v..... 477
W. & A. Fletcher Co., Berwind-White Coal Min. Co. v..... 477

CASES REPORTED.

ARRANGED UNDER THEIR RESPECTIVE CIRCUITS.

FIRST CIRCUIT.

Page

American Trust Co. v. W. & A. Fletcher Co. 477

Berwind-White Coal Min. Co. v. W. & A. Fletcher Co. 477

Carter Rice & Co. v. Aubin 274
Cate v. Connell 647

Edda, The 638

General Electric Co. v. Smith 514
Graham v. Peale, Peacock & Kerr of New York 311

Maine & N. H. Granite Corp. v. Hachey 508

Rice & Co. v. Aubin 274

Wellington v. Pelletier 458

SECOND CIRCUIT.

American Knit Goods Mfg. Co., In re 486

Bacon v. Conroy 158
Baglin v. Cusenier Co. 666
Baralong, The 24
Baruch v. United States 40
Bull v. United States Shipping Co. 364

Capewell Horse Nail Co. v. Mooney 248
Charles E. Matthews, The 667

Eugene F. Moran, The 667

Folmina, The 557
Force & Co. v. Bates Mach. Co. 671

Page

Ghazee, The 66

Hastorf v. O'Brien 606
Holeproof Hosiery Co. v. Wallach Bros. 263

James McWilliams, The 277

Knickerbocker Steamboat Co. v. Cusack 56

Lehigh Val. R. Co. v. Providence Washington Ins. Co. 62

McWilliams, The James 277
Mason v. National Herkimer County Bank of Little Falls 155
Matthews, The Charles E. 667
Metropolitan Securities Co. v. Ladd 435
Metropolitan Trust Co. of New York v. McKinnon 194
Moran, The Eugene F. 667

Pennsylvania Steel Co. v. New York City R. Co. 185
Philips v. Faber Sulky Co. 668

Scows 15D and 18D, The 667
Seneca, The 68
Sexton v. Kessler & Co. 161

Tracy, The William 280

William A. Force & Co. v. Bates Mach. Co. 671
William Tracy, The 280

THIRD CIRCUIT.

Colonial Trust Co. v. Montello Brick Works 144

Page
Delaware & H. Co. v. Flannelly.. 112
Dickinson v. Matheson Motor Car Co. 29

F. B. Vandegrift & Co. v. United States 469
Fowler & Wolfe Mfg. Co. v. National Radiator Co..... 187

Hennebique Const. Co. v. Myers.. 289

International Coal Min. Co. v. Pennsylvania R. Co..... 383

Lancaster Electric Light, Heat & Power Co. v. Platt Iron Works Co. 148

Novelty Glass Mfg. Co. v. Brookfield 25

Pennsylvania R. Co. v. International Coal Min. Co..... 383

Skubinsky v. Bodek..... 38
Skubinsky v. Bodek..... 116

United States v. Steinman..... 271

Vandegrift & Co. v. United States 469

FOURTH CIRCUIT.

Angle v. United States..... 184

Hauger v. United States..... 372

Patton v. Marshall..... 610

Renigar v. United States..... 172

Walker Roofing & Heating Co. v. Merchant & Evans Co..... 495

FIFTH CIRCUIT.

Bass v. Forest Products & Mfg. Co. 666
Brod v. J. K. Orr Shoe Co..... 667

Commonwealth Nat. Bank v. Fidelity & Deposit Co. of Maryland 667

Page
Continental Oil & Cotton Co. v. Armour & Co..... 667

Hogue v. United States..... 668
Houston Oil Co. of Texas v. Pollard 668

Rice v. McGrew..... 669

Sanger v. Rovello..... 669

Texas Cannel Coal Co. v. Consumers' Lignite Co..... 669
Texas & P. R. Co. v. Morris..... 670
Traders' Nat. Bank v. Rumsey... 670

Union Development & Construction Co. v. Globe Asphalt Co... 650
United States v. Lechenger..... 670

SIXTH CIRCUIT.

Chicago Grain Door Co. v. National Malleable Castings Co..... 324

Erie R. Co. v. Schultz..... 573

George A. Shaw & Co. v. Cleveland, C., C. & St. L. R. Co..... 520

Louisville & N. R. Co. v. Womack 559

National Dump Car Co. v. Ralston Steel Car Co..... 91

Shaw & Co. v. Cleveland, C., C. & St. L. R. Co..... 520

Westinghouse Electric & Mfg. Co. v. Toledo, P. C. & L. R. Co.... 69

SEVENTH CIRCUIT.

Chicago, I. & L. R. Co. v. Davis.. 281

North American Ry. Const. Co. v. Cincinnati Traction Co..... 32

Sheridan Co. v. Robert O. Law Co. 27

T. W. & C. B. Sheridan Co. v. Robert O. Law Co..... 27

Page
Wabash R. Co. v. United States.. 284
Womack v. Hicks Locomotive & Car Works..... 35

EIGHTH CIRCUIT.

A. Leschen & Sons Rope Co. v. Mayflower Gold Mining & Reduction Co..... 465
American Smelting & Refining Co. v. Karapa..... 517
Arkansas Brokerage Co. v. Dunn & Powell..... 454
Arkansas Valley Sugar Beet & Irrigated Land Co. v. Ft. Lyon Canal Co..... 551
Atchison, T. & S. F. R. Co. v. Sullivan 1

Baldi v. Cedar Hill Coal & Coke Co. 505
Bothe, In re..... 547

Canadian Northern R. Co. v. Walker 44
Central Coal & Coke Co. v. Penny 600
Central Coal & Coke Co. v. Williams 597
Colorado & S. R. Co. v. Tucker... 555

Dale v. Denver City Tramway Co. 511
Dempster, In re..... 51
Dempster v. Waters-Pierce Oil Co. 51

Erbaugh v. United States..... 663

Howe v. Meriwether..... 288

Illinois Cent. R. Co. v. Nelson... 331

Latta v. Chicago, St. P., M. & O. R. Co..... 198
Leschen & Sons Rope Co. v. Mayflower Gold Mining & Reduction Co..... 465

Mechanics' Ins. Co. of Philadelphia v. C. A. Hoover Distilling Co. 400
Minneapolis, St. P. & S. S. M. R. Co. v. Stevenson..... 286
Minot v. Snavely..... 30
Missouri Pac. R. Co. v. Castle... 124

Page
Mound Mines Co. v. Hawthorne.. 394

Oakes v. United States..... 139

Remmers v. Merchants'-Laclede Nat. Bank of St. Louis..... 490
Rudd v. United States..... 462

St. Louis & S. F. R. Co. v. Summers 328
Simerson v. St. Louis & S. F. R. Co. 618

Thomas v. Woods..... 535

Union Pac. Coal Co. v. United States 578

Van Sice v. Ibex Min. Co..... 587

Weir v. Rountree..... 500
Westinghouse Electric & Mfg. Co. v. Wagner Electric & Mfg. Co. 621

NINTH CIRCUIT.

California Development Co. v. New Liverpool Salt Co..... 214
City of Helena v. Helena Waterworks Co. 320
Commercial Pacific Cable Co. v. Pacific Mail S. S. Co..... 346

Eastern Oregon Land Co. v. Brosnan 382
Eastern Oregon Land Co. v. Simpson 382
El Cambio Gold Min. Co. v. Cucharas Min. Co..... 64

Freeding v. Allen..... 429

Griffin Wheel Co. v. Smith..... 411

Helena v. Helena Waterworks Co. 320
Holt Mfg. Co. v. Best Mfg. Co... 107

Johnson v. Willapa Lumber Co. 494

Kellogg-Mackay-Cameron Co. v. Havre Hotel Co..... 415

Lilienthal v. Cartwright..... 530

Page

Los Alamitos Sugar Co. v. Carroll 446

National Cash Register Co. v. Salling 334

New Liverpool Salt Co. v. California Development Co. (two cases) 242

Pacific Mail S. S. Co. v. Commercial Pacific Cable Co..... 346

Riverside Trust Co. v. East Riverside Water Co..... 407

Salton Sea Cases, The..... 214

Salton Sea Cases, The..... 242

Page

Saveljich v. Lytle Logging & Mercantile Co..... 443

Stamey v. Hemple..... 379

Sunset Telephone & Telegraph Co. v. City of Pomona..... 251

Thompson Co. v. Pennebaker.... 591

Thrasher, The..... 424

Tremont Coal & Coke Co. v. Johnson 207

United States v. Dunne..... 420

United States v. Foo Duck..... 204

United States Consol. Seeded Raisin Co. v. Chaddock & Co..... 527

Winfree v. Northern Pac. R. Co... 392

CASES CITED.

Page

Abbott v. Duluth (C. C.) 104 Fed. 833.. 260
Accumulator Co. v. Dubuque St. R. Co., 64 Fed. 70, 74, 12 C. C. A. 37, 41, 42... 467
Adam v. British & Foreign S. S. Co. (1893) 2 Q. B. 430, 67 L. J. Q. B. 844, 79 L. T. 31..... 445
Adams v. Shirk, 104 Fed. 54, 43 C. C. A. 407..... 566
Adams Exp. Co. v. Ohio State Auditor, 165 U. S. 194, 195, 197, 220, 221, 223, 224, 226, 227, 229, 17 Sup. Ct. 305, 41 L. Ed. 683; 166 U. S. 185, 220, 221, 222, 223, 224, 17 Sup. Ct. 604, 41 L. Ed. 965..... 5, 7, 9, 10, 11
Adams Exp. Co. v. Stettaners, 61 Ill. 184, 14 Am. Rep. 57..... 202
Addyston Pipe & Steel Co. v. U. S., 175 U. S. 211, 234, 245, 20 Sup. Ct. 96, 44 L. Ed. 136.....456, 580, 581
Adler v. Fenton, 24 How. 407, 412, 16 L. Ed. 696 .....317, 318, 320
Aerkfetz v. Humphreys, 145 U. S. 420, 12 Sup. Ct. 835, 36 L. Ed. 758..... 561
Alaska, etc., Min. Co. v. Whelan, 168 U. S. 86, 18 Sup. Ct. 40, 42 L. Ed. 390..... 511
Albert Eckstein, In re, G. A. 5,822 (T. D. 25,710) 470
Albuquerque Bank v. Perea, 147 U. S. 87, 13 Sup. Ct. 194, 37 L. Ed. 91..... 14
Alfson v. Bush Co., 182 N. Y. 393, 75 N. E. 230, 108 Am. St. Rep. 815..... 446
Allen, In re, 13 Blatchf. 271, Fed. Cas. No. 208..... 59
Allen v. Pullman's Palace Car Co., 139 U. S. 658, 661, 11 Sup. Ct. 682, 35 L. Ed. 303 14
Allerton v. Allerton, 50 N. Y. 670..... 488
Allgeyer v. Louisiana, 165 U. S. 578, 589, 17 Sup. Ct. 427, 41 L. Ed. 832..... 580
Altschul v. Clark, 39 Or. 321, 65 Pac. 991 .....382, 383
Altschul v. O'Neill, 35 Or. 202, 58 Pac. 95 .....382, 383
American Bonding Co. v. Pueblo Inv. Co., 150 Fed. 17, 27, 28, 80 C. C. A. 97, 107, 108, 9 L. R. A. (N. S.) 557..... 467
American Bonding & Trust Co. v. Gibson County, 145 Fed. 871, 76 C. C. A. 155.. 620
American Bridge Co. v. Seeds, 144 Fed. 605, 611, 75 C. C. A. 407, 413, 11 L. R. A. (N. S.) 1041..... 49
American Caramel Co. v. Thomas Mills & Bros., 149 Fed. 743, 79 C. C. A. 449.. 105
American Soda Fountain Co. v. Sample, 130 Fed. 145, 64 C. C. A. 497..... 91
Anderson v. U. S., 171 U. S. 604, 616, 19 Sup. Ct. 50, 43 L. Ed. 300.....457, 581
Annie J. Pardee, The (D. C.) 25 Fed. 155 645
Anustasakas v. International Contract Co., 51 Wash. 119, 98 Pac. 93.....444, 446

Page

Apperson v. Bolton, 29 Ark. 418..... 543
Armour Packing Co. v. Lacy, 200 U. S. 226, 26 Sup. Ct. 232, 50 L. Ed. 451..... 258
Aron v. Manhattan R. Co., 132 U. S. 84, 10 Sup. Ct. 24, 33 L. Ed. 272..... 109
Asher v. Texas, 128 U. S. 129, 9 Sup. Ct. 1, 32 L. Ed. 368..... 456
Atchison, etc., Co. v. Fajardo, 74 Kan. 314, 86 Pac. 301, 6 L. R. A. (N. S.) 681 445
Atchison, T. & S. F. R. Co. v. Hurley, 153 Fed. 503, 82 C. C. A. 453; 213 U. S. 126, 29 Sup. Ct. 466, 53 L. Ed. 729..... 549
Atkinson v. Staigg, 13 R. I. 725..... 543
Atlanta, etc., R. Co. v. Lovelace, 121 Ga. 487, 49 S. E. 607..... 514
Atlas Glass Co. v. Simonds Mfg. Co., 102 Fed. 647, 42 C. C. A. 558..... 299
Atlas S. S. v. Columbian Land Co., 102 Fed. 358, 359, 42 C. C. A. 398, 399..... 468
Atrops v. Costello, 8 Wash. 149, 35 Pac. 620 394
Augusta R. Co. v. Glover, 92 Ga. 132, 18 S. E. 406..... 445
Ayers v. Chicago, 101 U. S. 184, 25 L. Ed. 838 615

Bacon v. Michigan Cent. R. Co., 66 Mich. 166, 33 N. W. 181.....339, 340
Bain, Ex parte, 121 U. S. 1, 7 Sup. Ct. 781, 30 L. Ed. 849..... 182
Baker v. Crane, 138 Fed. 60, 70 C. C. A. 486 628
Ball & Socket Fastener Co. v. Kraetzer, 150 U. S. 111, 14 Sup. Ct. 48, 37 L. Ed. 1019 104
Baltimore & O. R. Co. v. Anderson, 85 Fed. 413, 416, 29 C. C. A. 235..... 562
Barden v. Crocker, 10 Pick. (Mass.) 383 237
Bardes v. Bank, 178 U. S. 524, 20 Sup. Ct. 1000, 44 L. Ed. 1175..... 540
Barker v. Stetson, 7 Gray (Mass.) 53, 66 Am. Dec. 457..... 60
Barnard v. Randle, 110 Fed. 906, 907, 49 C. C. A. 177, 178..... 518
Barnes v. Beloit, 19 Wis. 93..... 404
Barry v. Railroad Co., 51 App. Div. 385, 64 N. Y. Supp. 615..... 58
Barton v. Barbour, 104 U. S. 126, 26 L. Ed. 672..... 404
Bates Mach. Co., In re (D. C.) 91 Fed. 625 650
Bate v. Sulzberger, 157 U. S. 37, 15 Sup. Ct. 516, 39 L. Ed. 601..... 298
Bate Refrigerating Co. v. Gillett (C. C.) 31 Fed. 809, 815.....295, 299
Bate Refrigerating Co. v. Sulzberger, 157 U. S. 1, 15 Sup. Ct. 508, 39 L. Ed. 601 304
Beach v. Nixon, 9 N. Y. 35..... 297
Beale v. Hite, 35 Or. 176, 57 Pac. 322, 58 Pac. 102.....382, 383

Page

Bean v. Smith, 2 Mason, 252, 2 Fed. Cas. No. 1,174 225
Bello Corrunes, The, 6 Wheat. 153, 5 L. Ed. 229 364
Benbow-Brammer Co. v. Richmond Works (C. C.) 159 Fed. 161 109
Benedict, In re (D. C.) 140 Fed. 55 53
Bessette v. W. B. Conkey Co., 194 U. S. 324, 326, 24 Sup. Ct. 665, 48 L. Ed. 997 423
Beularig, The, 14 P. D. 3 353
Bird of Paradise, The, 5 Wall. 545, 18 L. Ed. 662 468
Blair v. Blair, 48 Iowa, 393 399
Blake v. Robertson, 94 U. S. 728, 24 L. Ed. 245 635
Blamire v. Sheldon Axle Works (C. C.) 149 Fed. 780 104
Blandy v. Griffith, 3 Fish. Pat. Cas. 609, 616, 3 Fed. Cas. 675,678 630
Blevins v. Smith, 104 Mo. 583, 16 S. W. 213, 13 L. R. A. 441 543
Boe v. Arnold (Or.) 102 Pac. 290 383
Boise Artesian Hot & Cold Water Co. v. Boise City, 213 U. S. 276, 29 Sup. Ct. 426, 53 L. Ed. 796 404
Bonsack v. Smith (C. C.) 70 Fed. 392 296
Bonthron v. Phœnix Ins. Co., 8 Ariz. 129, 71 Pac. 941, 61 L. R. A. 563 446
Boonville Nat. Bank v. Blakey, 107 Fed. 891, 47 C. C. A. 43 55
Booth v. Clark, 17 How. 322, 334, 15 L. Ed. 164 56
Boston, The, 3 Fed. Cas. 932 364
Boyce v. Grundy, 3 Pet. 210, 213, 215, 217, 7 L. Ed. 655 ..... 15, 225
Boyd v. Jaynesville Hay Tool Co., 158 U. S. 260, 15 Sup. Ct. 837, 39 L. Ed. 973 100
Bradford v. Belknap Motor Co. (C. C.) 105 Fed. 63 70
Bradley v. Fuller, 118 Mass. 239 ..... 316, 317, 318, 319
Bradshaw v. State, 17 Neb. 147, 22 N. W. 361, 366 581
Brady v. Chicago Great Western R. Co., 52 C. C. A. 48, 55, 114 Fed. 100, 107, 57 L. R. A. 712 49
Bram v. U. S., 168 U. S. 532, 533, 18 Sup. Ct. 183, 42 L. Ed. 568 ..... 181, 376
Brammer v. Schroeder, 106 Fed. 918, 928, 930, 46 C. C. A. 41 633
Breiner, In re (D. C.) 11 Am. Bankr. Rep. 684, 129 Fed. 155 493
Breitling, In re, 13 Am. Bankr. Rep. 129, 133 Fed. 146, 66 C. C. A. 212 494
Brennan & Co. v. Dowagiac Mfg. Co., 162 Fed. 472, 475, 476, 89 C. C. A. 392, 395, 396 ..... 635, 636, 637
Brewster v. Hartley, 37 Cal. 15, 99 Am. Dec. 237 555
Brewster v. Lanyon Zinc Co., 140 Fed. 801, 72 C. C. A. 213 589
Brooks v. Fiske, 15 How. 215, 14 L. Ed. 665 191
Brown v. Arnold, 131 Fed. 723, 67 C. C. A. 125 15
Brown v. Chapman, 60 E. C. L. 364 60
Brown v. Gardner, Har. (Mich.) 291 224
Brown v. Rome, W. & O. R. Co., 45 Hun (N. Y.) 439 129
Brown v. Rounsavell, 78 Ill. 589 580

Page

Brown v. Trousdale, 138 U. S. 389, 11 Sup. Ct. 308, 34 L. Ed. 987 322
Brown v. U. S., 74 C. C. A. 214, 216, 219, 143 Fed. 60, 62, 65 665
Bruner v. Superior Court, 92 Cal. 239, 28 Pac. 341 ..... 256, 262
Bryan v. Bernheimer, 181 U. S. 188, 21 Sup. Ct. 557, 45 L. Ed. 814 55
Bulwer's Case, 7 Coke Rep. 1a, 77 Eng. Rep. 411 237
Bundy Mfg. Co. v. Detroit Times Register Co., 94 Fed. 524, 36 C. C. A. 375 327
Butt v. MacNichol Const. Co., 140 Fed. 840, 72 C. C. A. 252 498
Butterworth v. Boral, 97 O. G. 1596 307
Burns v. Erben, 40 N. Y. 463 57
Burns v. Meyer, 100 U. S. 671, 25 L. Ed. 738 100
Burt v. Advertiser Newspaper Co., 154 Mass. 238, 247, 28 N. E. 1, 13 L. R. A. 97 49
Buzzard v. Huston, 119 U. S. 347, 7 Sup. Ct. 249, 30 L. Ed. 451 404
Buzzell v. Emerton, 161 Mass. 176, 36 N. E. 796 58
Byrne v. Kansas City, etc., Ry., 61 Fed. 605, 614, 9 C. C. A. 666, 24 L. R. A. 693 563
Byron, The, 4 Fed. Cas. 956 364

Cæsar v. Capell (C. C.) 83 Fed. 403 262
Caha v. U. S., 152 U. S. 211, 14 Sup. Ct. 513, 38 L. Ed. 415 181
Cairncross v. Lorimer, 3 Macq. 828 534
California Bank v. Kennedy, 167 U. S. 362, 17 Sup. Ct. 831, 42 L. Ed. 198 197
California Development Co. v. New Liverpool Salt Co., 172 Fed. 792, 97 C. C. A. 214 243
Callaghan v. Myers, 128 U. S. 617, 9 Sup. Ct. 177, 32 L. Ed. 547 628
Campau v. North, 39 Mich. 606, 33 Am. Rep. 433 129
Canada v. Michigan Malleable Iron Co., 124 Fed. 486, 493, 61 C. C. A. 194 89
Canney v. Walkeine, 113 Fed. 66, 51 C. C. A. 53, 58 L. R. A. 33 462
Capewell Horse Nail Co. v. Putnam Nail Co. (C. C.) 140 Fed. 670 250
Carpenter v. Ashley, 148 Cal. 423, 83 Pac. 444 338
Carpenter v. Rannels, 19 Wall. 138, 22 L. Ed. 77 590
Carr v. National Bank & Loan Co., 167 N. Y. 379, 60 N. E. 649, 82 Am. St. Rep. 725 488
Carroll v. Carroll's Lessee, 16 How. 275, 14 L. Ed. 936 262
Casebeer v. Mowry, 55 Pa. 419, 93 Am. Dec. 766 239
Casey v. Cavaroc, 96 U. S. 467, 477, 486, 24 L. Ed. 779 ..... 163, 167, 168
Casey v. National Bank, 96 U. S. 492, 24 L. Ed. 789 163
Casey v. Schuchardt, 96 U. S. 494, 24 L. Ed. 790 168
Cathcart v. Robinson, 5 Pet. 263, 278, 8 L. Ed. 120 224
Chamberlain v. Iowa Tel. Co., 119 Iowa, 619, 93 N. W. 596 260

Page

Charge to Grand Jury, 2 Sawy. 667, Fed. Cas. No. 18,255 179
Charles H. Trickey, The, 66 Fed. 1020, 14 C. C. A. 225 645
Chattanooga Transit Co. v. Walton, 105 Tenn. 415, 420, 58 S. W. 737 563
Cheltenham Stone & Gravel Co. v. Gates Iron Works, 23 Ill. App. 635, 637; 124 Ill. 623, 626, 16 N. E. 923 468
Cheney v. Libby, 134 U. S. 68, 78, 10 Sup. Ct. 498, 502, 33 L. Ed. 818 399
Cherokee Tobacco Case, 11 Wall. 616, 621, 20 L. Ed. 227 309
Chesapeake, etc., R. Co. v. Higgins, 85 Tenn. 620, 4 S. W. 47 446
Chicago, B. & Q. R. Co. v. Gardiner, 51 Neb. 70, 70 N. W. 508 202
Chicago Co., In re (D. C.) 104 Fed. 67... 497
Chicago, etc., R. Co. v. Pounds, 82 Fed. 217, 27 C. C. A. 112 576
Chicago Great Western R. Co. v. McDonough, 161 Fed. 657, 88 C. C. A. 517 598
Chicago, K. & W. R. Co. v. Pontius, 157 U. S. 209, 15 Sup. Ct. 585, 39 L. Ed. 675 126
Chicago, M. & St. P. R. Co. v. Heil, 154 Fed. 626, 629, 83 C. C. A. 400, 403 519
Chicago, M. & St. P. R. Co. v. Solan, 169 U. S. 133, 18 Sup. Ct. 289, 42 L. Ed. 688 125, 203, 503, 504
Chicago, N. O. & T. P. R. Co. v. Farra, 66 Fed. 496, 13 C. C. A. 602 577
Chicago, R. I. & P. R. Co. v. Martin, 59 Kan. 437, 53 Pac. 461 504
Chicago & N. W. R. Co. v. Andrews, 130 Fed. 65, 72, 64 C. C. A. 399 576
Chicago & N. W. R. Co. v. Sayles, 97 U. S. 554, 24 L. Ed. 1053 100
Chidester v. Consolidated Ditch Co., 59 Cal. 203 241
Choctaw, O. & G. R. R. v. McDade, 191 U. S. 64, 24 Sup. Ct. 24, 48 L. Ed. 96.. 508
Chunn v. City & Suburban Ry., 207 U. S. 302, 28 Sup. Ct. 63, 52 L. Ed. 219..329, 332
City of Augusta, The, 80 Fed. 297, 303, 304, 25 C. C. A. 430 641
City of Boston v. Allen, 91 Fed. 248, 249, 33 C. C. A. 485, 486 633
City of Duluth v. Abbott, 117 Fed. 137, 55 C. C. A. 153 260
City of Duluth v. Duluth Tel. Co., 84 Minn. 486, 87 N. W. 1127 260
City of Manning v. German Ins. Co., 107 Fed. 52, 54, 46 C. C. A. 144, 146 519
City of Ottumwa v. City Water Supply Co., 119 Fed. 315, 56 C. C. A. 219, 59 L. R. A. 604 323
City of Wichita v. Old Colony Trust Co., 132 Fed. 641, 66 C. C. A. 19 260
Clandeboye, The, 70 Fed. 631, 17 C. C. A. 300 364
Clarke v. Larremore, 188 U. S. 486, 23 Sup. Ct. 363, 47 L. Ed. 555 55
Clark v. Iselin, 21 Wall. 360, 22 L. Ed. 568 167
Cleveland v. Construction Co., 67 Ohio St. 197, 65 N. E. 885, 59 L. R. A. 775, 93 Am. St. Rep. 670 525
Cleveland, C., C. & St. L. R. Co. v. Osgood, 36 Ind. App. 34, 73 N. E. 285..... 445

Page

Cleveland Foundry Co. v. Kauffman (C. C.) 126 Fed. 658 91
Cobb, In re, 7 Am. Bankr. Rep. 104..... 121
Coder v. Arts, 213 U. S. 223, 232, 29 Sup. Ct. 436, 53 L. Ed. 772 ..... 537, 539
Coffey v. Greenfield, 62 Cal. 602 289
Coffey v. U. S., 116 U. S. 436, 6 Sup. Ct. 437, 29 L. Ed. 684 670
Coghlan v. Stetson (C. C.) 19 Fed. 727, 729 467
Cole v. Thayer, 25 Mich. 212 529
Collins v. Mack, 31 Ark. 684 129
Colvin v. Jacksonville, 158 U. S. 456, 15 Sup. Ct. 866, 39 L. Ed. 1053 322
Combination Steel & Iron Co. v. St. Paul City Ry., 47 Minn. 207, 209, 49 N. W. 744 468
Com. v. Brailey, 134 Mass. 530 377
Com. v. Cawood, 2 Va. Cas. 541.....175, 180
Com. v. Child, 13 Pick. 198 182
Com. v. Crans, 2 Clark (Pa.) 172 179
Com. v. Johnson, 6 Pa. 136 530
Com. v. Standard Oil Co., 101 Pa. 119... 145
Comptoir D'Escompte v. Dresbach, 78 Cal. 15, 20, 21, 20 Pac. 28 468
Concord First Nat. Bank v. Hawkins, 174 U. S. 364, 19 Sup. Ct. 739, 43 L. Ed. 1007 197
Consolidated Co. v. Walker, 138 U. S. 132, 11 Sup. Ct. 292, 34 L. Ed. 920 191
Consolidated Safety Valve Co. v. Ashton Valve Co. (C. C.) 26 Fed. 319 28
Consolidated Valve Co. v. Crosby Steam Gauge & Valve Co. (C. C.) 7 Fed. 768.. 104
Construction Co. v. Winton, 208 Pa. 469, 57 Atl. 955 145
Continental Paper Bag Co. v. Eastern Paper Bag Co., 210 U. S. 405, 28 Sup. Ct. 748, 52 L. Ed. 1122 70
Contractors' Co. v. Hill Co., 148 Fed. 832, 78 C. C. A. 522 498
Coolidge v. Learned, 8 Pick. (Mass.) 504 603
Coulter v. American Merchants' Exp. Co., 56 N. Y. 585 210
Coulter v. Louisville & N. R. Co., 196 U. S. 599, 609, 25 Sup. Ct. 342, 49 L. Ed. 615 ..... 14, 15
Cox v. Railroad Co., 2 Leg. Rep. 168..... 564
Crain v. U. S., 162 U. S. 625, 16 Sup. Ct. 952, 40 L. Ed. 1097 178
Creamer v. Bowers (C. C.) 35 Fed. 206.. 635
Creely v. Bay State Brick Co., 103 Mass. 514 224
Crosby Steam Gage Valve Co. v. Consolidated Safety Valve Co., 141 U. S. 441, 448, 449, 454, 12 Sup. Ct. 49, 35 L. Ed. 809 635
Cross v. Del Valle, 1 Wall. 5, 17 L. Ed. 515 ..... 615, 616
Crotty v. Chicago Great Western R. Co., 95 C. C. A. 91, 169 Fed. 593 606
Cummings v. Arnold, 3 Metc. (Mass.) 486, 37 Am. Dec. 155 381
Cummings v. National Bank, 101 U. S. 153, 158, 25 L. Ed. 903 ..... 6, 16
Cunard S. S. Co. v. Kelley, 115 Fed. 686, 53 C. C. A. 310 68

Dallemagne v. Moisan, 197 U. S. 169, 25 Sup. Ct. 422, 49 L. Ed. 709 310

Page

Dalton v. U. S., 63 U. S. 442, 16 L. Ed. 395 376
Danforth v. State, 75 Ga. 614, 58 Am. Rep. 480..... 176
D'Arcy v. Staples & Hanford Co., 161 Fed. 733, 742, 88 C. C. A. 606..... 327
Darling v. Berry (C. C.) 13 Fed. 659, 667 541
Darragh v. H. Wetter Mfg. Co., 23 C. C. A. 609, 619, 78 Fed. 7, 16..... 12
Davis v. Chicago, I. & L. R. Co., 151 Fed. 1008, 81 C. C. A. 286..... 282
Davis v. Green, 102 Mo. 170, 14 S. W. 876, 11 L. R. A. 90..... 543
Davis v. Pacific Telephone & Telegraph Co., 127 Cal. 312, 313, 57 Pac. 764, 59 Pac. 698.....256, 261
Davidson v. Hill (1901) 2 K. B. 606, 70 L. J. K. B. 788, 85 L. T. 118, 49 W. R. 630, 9 Asp. M. C. 223..... 445
Dederick v. Cassell (C. C.) 9 Fed. 506... 450
Deering v. Harvester Works, 155 U. S. 286, 302, 15 Sup. Ct. 118, 39 L. Ed. 153 633
Deizsch v. Huidekoper, 103 U. S. 494, 26 L. Ed. 497..... 617
De Jong v. Erie R. Co., 43 App. Div. 427, 60 N. Y. Supp. 125..... 129
De La Vergne v. German Sav. Inst., 175 U. S. 40, 20 Sup. Ct. 20, 44 L. Ed. 65... 197
De La Vergne Mach. Co. v. Featherstone, 147 U. S. 209, 223, 13 Sup. Ct. 283, 37 L. Ed. 138..... 590
Delaware Co. v. Passenger R. Co., 204 Pa. 25, 53 Atl. 533..... 145
Delaware, L. & W. R. Co. v. Jersey City (C. C.) 168 Fed. 128..... 616
Dempster v. Waters-Pierce Oil Co., 97 C. C. A. 51, 172 Fed. 353..... 540
Deni v. Pennsylvania R. Co., 181 Pa. 525, 37 Atl. 558, 59 Am. St. Rep. 676..... 445
Denver City Tramway Co. v. Cobb, 164 Fed. 41, 90 C. C. A. 459.....329, 332
Denver Tramway Co. v. Martin, 44 Colo. 324, 98 Pac. 836..... 513
Denver & R. G. R. Co. v. Wagner, 167 Fed. 75, 92 C. C. A. 527.....619, 620
Deweese v. Reinhard, 165 U. S. 386, 17 Sup. Ct. 340, 41 L. Ed. 757..... 404
Dickerson v. Colgrove, 100 U. S. 578, 532, 25 L. Ed. 618.....420, 534
Dickinson v. Matheson Motor Car Co., (C. C.) 161 Fed. 874..... 29
Dieckerhoff, In re (C. C.) 54 Fed. 161.... 44
Diggs v. Wolcott, 4 Cranch, 179, 2 L. Ed. 587 617
Dimick v. Shaw, 94 Fed. 266, 36 C. C. A. 347 222
D. M. Hall, The, 7 Fed. Cas. 770..... 364
Docker v. Somes, 2 Mylne & K. 674..... 637
Dodge v. Norlin, 133 Fed. 363, 66 C. C. A. 425.....398, 538
Doe v. Braden, 16 How. 635, 14 L. Ed. 1000 306
Doggett v. Emerson, 3 Story, 700, Fed. Cas. No. 3,960..... 488
Donald v. Hewitt, 33 Ala. 534, 73 Am. Dec. 431..... 485
Douglas v. Kentucky, 168 U. S. 488, 18 Sup. Ct. 199, 42 L. Ed. 533..... 258
Douglass v. Boardman, 113 Mich. 618, 71 N. W. 1100..... 404

Page

Dowagiac Mfg. Co. v. Superior Drill Co., 162 Fed. 479, 480, 481, 89 C. C. A. 399, 400 .....635, 638
Downey v. Hicks, 14 How. 240, 243, 14 L. Ed. 404..... 468
Dows v. Chicago, 11 Wall. 108, 20 L. Ed. 65 14
Drexel v. Pease, 133 N. Y. 129, 30 N. E. 732 164
Driscoll v. Green, 59 N. H. 101..... 467
Dubois v. Kirk, 158 U. S. 60, 15 Sup. Ct. 729, 39 L. Ed. 895..... 89
Dueber Watch-Case Mfg. Co. v. Robbins, 75 Fed. 17, 21 C. C. A. 198.....106, 107
Dunn Mfg. Co. v. Standard Computing Scale Co., 90 C. C. A. 331, 163 Fed. 521 89
Dunseath & Son Co., In re (D. C.) 168 Fed. 973..... 53
Durland v. U. S., 161 U. S. 306, 16 Sup. Ct. 508, 40 L. Ed. 709..... 463

Eastman v. Porter, 14 Wis. 39, 42, 46, 47 468
Edwards v. Elliott, 21 Wall. 532, 22 L. Ed. 487..... 481
Elder v. Horshoe Min. & Mill. Co., 194 U. S. 248, 24 Sup. Ct. 643, 48 L. Ed. 960 589
Elizabeth v. Pavement Co., 97 U. S. 126, 24 L. Ed. 1000.....629, 635
Ellis v. Kyger, 90 Mo. 606, 3 S. W. 23... 543
Elmbank, The, 69 Fed. 104, 108, 109, 16 C. C. A. 164..... 353
El Paso Water Co. v. El Paso, 152 U. S. 157, 14 Sup. Ct. 494, 38 L. Ed. 396... 323
Emerick v. Armstrong, 1 Ohio, 513..... 530
Emily Souder, The, 17 Wall. 666, 670, 21 L. Ed. 683..... 468
E. M. Miller Co. v. Meridan Bronze Co. (C. C.) 80 Fed. 523..... 105
Employer's Liability Cases, 207 U. S. 463, 28 Sup. Ct. 141, 52 L. Ed. 297..... 125
Endermore, The, 7 Asp. Mar. Cases, 334 353
Englehart v. Farrant (1897) 1 Q. B. 240.. 461
Eppstein, In re, 156 Fed. 42, 84 C. C. A. 208, 17 L. R. A. (N. S.) 465..... 398
Equitable Life Assur. Soc. of United States v. Brown, 213 U. S. 25, 29 Sup. Ct. 404, 53 L. Ed. 682.....403, 404, 405
Erhardt v. Boaro, 113 U. S. 537, 5 Sup. Ct. 560, 28 L. Ed. 1113..... 221
Eschbach v. Hurtt, 47 Md. 61, 66..... 127
Ewing v. U. S., 136 Fed. 53, 54, 69 C. C. A. 61, 62..... 665
Express, The, 59 Fed. 476, 8 C. C. A. 182 667
Express Co. v. Kountze Bros., 8 Wall. 358, 19 L. Ed. 457..... 566
Eyster v. Gaff, 91 U. S. 521, 23 L. Ed. 403 390

Fahs v. Darling, 82 Ill. 142..... 529
Fargo v. Hart, 193 U. S. 490, 503, 24 Sup. Ct. 498, 48 L. Ed. 761..... 16
Farmer & Getz v. Columbian County Tel. Co., 72 Ohio St. 526, 74 N. E. 1079, 1080 260
Farmers' & Mechanics' Bank v. Logan, 74 N. Y. 568..... 164
Farnum v. Platt, 8 Pick. (Mass.) 339, 19 Am. Dec. 330..... 297
Farwell v. Boston & W. R. Co., 4 Metc. (Mass.) 49, 38 Am. Dec. 339..... 619

Page

Faxton v. Faxon, 28 Mich. 159..... 534
Federal Lead Co. v. Swyers, 161 Fed. 687, 88 C. C. A. 547..... 598
Feibelman v. Packard, 109 U. S. 421, 3 Sup. Ct. 289, 27 L. Ed. 984..... 55
Felton v. Aubry, 74 Fed. 350, 356, 20 C. C. A. 436..... 562
Ferrara v. Auric Min. Co., 43 Colo. 496, 95 Pac. 952, 17 L. R. A. (N. S.) 964... 445
Field v. Barber Asphalt Co., 194 U. S. 618, 24 Sup. Ct. 784, 48 L. Ed. 1142..... 457
Field v. U. S., 137 Fed. 6, 8, 69 C. C. A. 568, 570..... 665
Field v. West Orange, 36 N. J. Eq. 118; 37 N. J. Eq. 434..... 225
Fifield v. Whittemore (C. C.) 33 Fed. 835 635
Findlay v. McAllister, 113 U. S. 104, 111, 113, 114, 5 Sup. Ct. 401, 404, 405, 406, 28 L. Ed. 930.....316, 317
Fire Ins. Ass'n v. Wickham, 141 U. S. 564, 576, 12 Sup. Ct. 84, 35 L. Ed. 860... 533
First Bank, In re, 152 Fed. 64, 81 C. C. A. 260..... 649
First Nat. Bank v. Connett, 142 Fed. 33, 37, 73 C. C. A. 219, 5 L. R. A. (N. S.) 148 .....549, 550
First Nat. Bank v. Converse, 200 U. S. 425, 26 Sup. Ct. 306, 50 L. Ed. 537..... 197
First Nat. Bank v. Newton, 10 Colo. 161, 171, 14 Pac. 428..... 468
First Nat. Bank v. Pennsylvania Trust Co., 124 Fed. 968, 60 C. C. A. 100..... 165
First Nat. Bank v. Title & Trust Co., 198 U. S. 280, 291, 25 Sup. Ct. 693, 696, 49 L. Ed. 1061.....539, 540
Fitzgerald v. First Nat. Bank, 114 Fed. 474, 482, 52 C. C. A. 276, 284..... 467
Fleischer, In re, 18 Am. Bankr. Rep. 197, 151 Fed. 81..... 119
Fletcher v. Fuller, 120 U. S. 534, 548, 7 Sup. Ct. 667, 30 L. Ed. 759..... 603
Fletcher v. Peck, 6 Cranch, 128, 3 L. Ed. 162..... 259
Fortin v. Manville Co. (C. C.) 128 Fed. 642 511
Frankfurter v. Bryan, 12 Ill. App. 549.. 58
Franklin v. Greene, 2 Allen (Mass.) 519 224
Franklin v. Stoughton Wagon Co., 168 Fed. 857, 94 C. C. A. 269..... 398
French v. Hay, 22 Wall. 250, 22 L. Ed. 854 617
Friend, In re, 134 Fed. 778, 67 C. C. A. 500 539
Frisbie v. U. S., 157 U. S. 160, 15 Sup. Ct. 586, 39 L. Ed. 657..... 181
Frost v. Wenie, 157 U. S. 46, 58, 15 Sup. Ct. 532, 39 L. Ed. 614..... 143
Fulco v. Schuylkill Stone Co., 94 C. C. A. 498, 169 Fed. 98, 100..... 445
Fuller v. Insurance Cos. (C. C.) 36 Fed. 469, 1 L. R. A. 891..... 406
Fuller v. Nickerson, 69 Me. 228, 236..... 485
Fuller v. Yentzer, 94 U. S. 288, 24 L. Ed. 103 ..... 450, 451

Gailey, In re, 11 Am. Bankr. Rep. 539, 127 Fed. 538, 62 C. C. A. 336..... 493
Gallagher v. De Lamcey Co. (D. C.) 158 Fed. 381..... 649
Gardner v. People, 20 Ill. 430..... 177

Page

Garner v. Trumbull, 94 Fed. 321, 36 C. C. A. 361..... 557
Garretson v. Clark, 111 U. S. 120, 4 Sup. Ct. 291, 28 L. Ed. 371.....628, 629, 635, 637
Gas Co. v. West, 50 Iowa, 16..... 147
Gassett v. Gilbert, 6 Gray (Mass.) 94, 98 339, 340
General Smith, The, 4 Wheat. 438, 443, 4 L. Ed. 609..... 479
Geofroy v. Riggs, 133 U. S. 258, 10 Sup. Ct. 295, 33 L. Ed. 642..... 305
Georgia Pac. R. Co. v. Hughart, 90 Ala. 36, 8 South. 62..... 202
Ghazee, The 172 Fed. 368, 97 C. C. A. 66 68
Gilbert v. Burlington, C. R. & N. R. Co., 128 Fed. 529, 531, 63 C. C. A. 27, 29 50
Gilbert v. Moline Water Power & Mfg. Co., 19 Iowa, 319..... 235
Glide, The, 167 U. S. 606, 623, 17 Sup. Ct. 930, 936, 42 L. Ed. 296..... 481
Golden Reward Min. Co. v. Buxton Min. Co., 38 C. C. A. 228, 238, 97 Fed. 413, 422 605
Goodson v. State, 29 Fla. 511, 10 South. 738, 30 Am. St. Rep. 135..... 177
Gormley v. Clark, 134 U. S. 339, 10 Sup. Ct. 554, 33 L. Ed. 909..... 404
Goshen Sweeper Co. v. Bissell Carpet Sweeper Co., 72 Fed. 67, 75, 19 C. C. A. 13, 21..... 89
Gould v. Spicers (C. C.) 20 Fed. 317.... 103
Grady v. McCorkle, 57 Mo. 172, 17 Am. Rep. 676..... 543
Granite City Bank, In re, 137 Fed. 818, 70 C. C. A. 316.....53, 540
Great Northern R. Co. v. U. S., 84 C. C. A. 93, 109, 155 Fed. 945, 961..... 143
Great Southern Fireproof Hotel Co. v. Jones, 193 U. S. 532, 24 Sup. Ct. 576, 48 L. Ed. 778.....523, 524
Green v. Lessees of Henry Neal, 6 Pet. 289, 297, 8 L. Ed. 402..... 257
Green v. Terminal R. Ass'n, 211 Mo. 18, 109 S. W. 715..... 129
Greene, In re (D. C.) 52 Fed. 104, 115..... 580
Grice, In re (C. C.) 79 Fed. 627, 644..... 580
Griebel v. Brooklyn Heights R. Co., 68 App. Div. 204, 74 N. Y. Supp. 126..... 129
Griffin v. Dutton, 165 Fed. 626, 91 C. C. A. 614..... 650
Griffith v. Denver Consol. Tramway Co., 14 Colo. App. 504, 61 Pac. 46..... 513
Griffiths v. Metropolitan St. R. Co., 171 N. Y. 106, 63 N. E. 808..... 129
Grogan v. Adams Exp. Co., 114 Pa. 523, 7 Atl. 134, 50 Am. Rep. 360..... 203
Guaranty Title & Trust Co. v. Pearlman (D. C.) 144 Fed. 550..... 55
Guardian Trust Co. v. Kansas City S. R. Co., 96 C. C. A. 285, 171 Fed. 43..... 540
Guiding Star, The (D. C.) 9 Fed. 521; (C. C.) 18 Fed. 263..... 482
Gulf, C. & S. F. R. Co. v. Johnson, 54 Fed. 474, 4 C. C. A. 447..... 58
Gulf, C. & S. F. R. Co. v. Washington, 49 Fed. 347, 1 C. C. A. 286..... 238

Hahlo v. Cole, 15 Am. Bankr. Rep. 591, 112 App. Div. 639, 98 N. Y. Supp. 1049 390

Page

Hahn v. U. S., 100 Fed. 635, 40 C. C. A. 622 471
Haines v. Carpenter, 91 U. S. 254, 23 L. Ed. 345..... 617
Hale v. Allinson, 188 U. S. 56, 68, 23 Sup. Ct. 244, 47 L. Ed. 380..... 56
Haley v. Railroad, 7 Baxt. (Tenn.) 239.. 564
Hall v. Smith, 103 Mo. 289, 15 S. W. 621 543
Hall & Kaul Co. v. Friday, 158 Fed. 593, 87 C. C. A. 23.....498, 649
Hammond v. Pennock, 61 N. Y. 145..... 488
Hand v. The Elvira, 11 Fed. Cas. 413..... 364
Hannewinkle v. Georgetown, 15 Wall. 547, 21 L. Ed. 231..... 14
Hanover Nat. Bank v. Moyses, 186 U. S. 181, 190, 22 Sup. Ct. 857, 46 L. Ed. 1113 541, 546
Harkness v. Toulman, 25 Mich. 80..... 535
Harrison & Calhoun v. South Carthage Min. Co., 95 Mo. App. 80, 68 S. W. 963 549, 550
Hart v. Pennsylvania R. R. Co., 112 U. S. 331, 5 Sup. Ct. 151, 28 L. Ed. 717..202, 203
Hart v. Ten Eyck, 2 Johns. Ch. (N. Y.) 62, 108..... 636
Hart v. U. S., 84 Fed. 799, 28 C. C. A. 612 581
Hauselt v. Harrison, 105 U. S. 401, 26 L. Ed. 1075..... 164
Hayes v. U. S., 159 Fed. 101, 103, 94 C. C. A. 449..... 581
H. D. Berner, In re, 4 Am. Bankr. Rep. 395 494
Head Money Cases, 122 U. S. 580, 598, 5 Sup. Ct. 247, 28 L. Ed. 798..... 307
Hennessey v. Woolworth, 128 U. S. 438, 442, 9 Sup. Ct. 109, 32 L. Ed. 500..... 399
Henry v. Providence Tool Co., Fed. Cas. No. 6,384, 3 Ban. & A. 501.....294, 295
Henry v. Trustees, 48 Ohio St. 676, 30 N. E. 1122..... 261
Hermann v. Mill Co. (D. C.) 71 Fed. 853 511
Hewitt v. Berlin Mach. Works, 194 U. S. 296, 24 Sup. Ct. 690, 48 L. Ed. 986.. 398
Hill v. Francklyn, 162 Fed. 880, 89 C. C. A. 570..... 471
Hill v. Hermans, 59 N. Y. 396..... 530
Hine v. Roberts, 48 Conn. 267, 271, 40 Am. Rep. 170..... 468
Hipp v. Babin, 19 How. 271, 15 L. Ed. 633 404
H. J. Quimby Co., In re (D. C.) 121 Fed. 139; 126 Fed. 167, 61 C. C. A. 111 640
Hogan v. Page, 2 Wall. 605, 17 L. Ed. 854 590
Holder v. Railroad, 11 Lea (Tenn.) 176, 178 .....563, 564
Holman, In re (D. C.) 1 Am. Bankr. Rep. 600, 92 Fed. 512..... 492
Holmes, In re, 142 Fed. 391, 73 C. C. A. 491 538
Holt v. Indiana Mfg. Co., 176 U. S. 68, 20 Sup. Ct. 272, 44 L. Ed. 374..... 322
Home Ins. Co. of New York v. Virginia-Carolina Chemical Co. (C. C.) 109 Fed. 681; 113 Fed. 1, 51 C. C. A. 21.....404, 406
Hopkins v. U. S., 171 U. S. 573, 578, 592, 19 Sup. Ct. 40, 43 L. Ed. 290.....457, 581
Hopner v. McGowan, 116 N. Y. 405-410, 22 N. E. 558..... 57
Hopt v. Utah, 110 U. S. 579, 4 Sup. Ct. 204, 28 L. Ed. 262..... 183

Page

Horman v. U. S., 116 Fed. 350, 351, 53 C. C. A. 570..... 665
Horner-Gaylord Co. v. Miller (D. C.) 147 Fed. 295..... 56
Hornthall v. Burwell, 109 N. C. 10, 13 S. E. 721, 13 L. R. A. 740, 26 Am. St. Rep. 556..... 484
Horn v. Water Co., 13 Cal. 69, 73 Am. Dec. 569.....289
Horseshoe Min. Co. v. Miners' Ore Sampling Co., 77 C. C. A. 213, 214, 147 Fed. 517, 518..... 8
Howard, The, 12 Fed. Cas. 630, 633..... 364
Howard v. McDonough, 77 N. Y. 592..... 159
Howden, In re (D. C.) 111 Fed. 723..... 494
Howland v. Blake Mfg. Co., 156 Mass. 543, 31 N. E. 656..... 338
H. Scherer & Co. v. Everset, 94 C. C. A. 346, 168 Fed. 822, 827..... 606
Huber v. Nelson, 148 U. S. 275, 13 Sup. Ct. 606, 37 L. Ed. 447..... 298
Humphrey v. Tatman, 198 U. S. 91, 93, 25 Sup. Ct. 567, 49 L. Ed. 956....164, 170, 171
Hurlburt v. Fitzpatrick, 176 Mass. 287, 57 N. E. 464..... 381
Hurlbut v. Schillinger, 130 U. S. 456, 9 Sup. Ct. 584, 32 L. Ed. 1011..... 635
Hutchins v. King, 1 Wall. 53, 60, 17 L. Ed. 544..... 519

Idaho, The, 93 U. S. 575, 576, 23 L. Ed. 978 636
Illinois Cent. R. Co. v. Ackerman, 144 Fed. 959, 76 C. C. A. 13..... 330
Insurance Co. v. Crandal, 120 U. S. 527, 530, 7 Sup. Ct. 685, 30 L. Ed. 740..... 518
Insurance Co. v. Frederick, 58 Fed. 144, 147, 148, 7 C. C. A. 122, 126..... 518
Insurance Co. v. Heiserman, 67 Fed. 947, 15 C. C. A. 95..... 518
Insurance Co. v. Hillmon, 107 Fed. 834, 842, 45 C. C. A. 668; 145 U. S. 285, 12 Sup. Ct. 909, 36 L. Ed. 706.....404, 406
Interstate Commerce Com. v. Alabama R. Co., 168 U. S. 166, 18 Sup. Ct. 49, 42 L. Ed. 414..... 386
Iowa R. Co. v. Blumer, 206 U. S. 482, 27 Sup. Ct. 769, 51 L. Ed. 1148..... 382

Jacobs v. Spalding, 71 Wis. 177, 186, 36 N. W. 608..... 467
Jefferson Branch Bank v. Skelly, 66 U. S. 436, 443, 17 L. Ed. 173..... 258
Jefferson v. Burhans, 85 Fed. 924, 927, 29 C. C. A. 487, 490..... 518
Jennings v. Jennings, 21 Ohio St. 56..... 543
Jesus College v. Bloom, 3 Ark. 262..... 224
John Deere Plow Co. v. McDavid, 137 Fed. 802-810, 70 C. C. A. 422..... 398
John Gilpin, The, 13 Fed. Cas. 675, 678... 353
Johnson v. Halley, 3 Tex. Civ. App. 137, 27 S. W. 750..... 530
Johnson v. Simpson, 36 N. H. 91..... 467
Johnson v. Southern Pac. Co., 196 U. S. 1, 25 Sup. Ct. 158, 49 L. Ed. 363..... 285
Johnson v. Weed, 9 Johns. (N. Y.) 310, 6 Am. Dec. 273..... 468
Johnson Railroad Signal Co. v. Union Switch & Signal Co. (C. C.) 43 Fed. 331 615

Page

Johnston, In re, 137 Cal. 115, 120, 69 Pac. 973 255
Jones v. Gerock, 59 N. C. 190..... 543
Jones v. Great Southern Fireproof Hotel Co., 86 Fed. 370, 30 C. C. A. 108..... 523
Jones v. Robbins, 8 Gray (Mass.) 329... 182
Jones v. Smith, 2 Ves. Jr. 372..... 166
Judson v. Western R. R. Corp., 6 Allen (Mass.) 486, 83 Am. Dec. 646..... 202

Kampfe v. J. R. Torrey Razor Co. (C. C.) 149 Fed. 778..... 104
Kansas City, etc., R. Co. v. Cook, 66 Fed. 115, 121, 13 C. C. A. 364, 370, 28 L. R. A. 181..... 561
Kansas City, Ft. S. & M. R. Co. v. Murray, 55 Kan. 336, 40 Pac. 646..... 129
Kansas Pac. R. Co. v. Peavey, 29 Kan. 169, 44 Am. Rep. 630..... 504
Kate B. Jones, The (1892) P. D. 336, 7 Asp. Mar. Cases, 332..... 353
Katie, The, Fed. Cas. No. 14,342..... 485
Kellogg, In re, 121 Fed. 333, 57 C. C. A. 547 398
Kellogg-Mackay-Cameron Co. v. Harve Hotel Co., 97 C. C. A. 415, 173 Fed. 249 535
Kell v. Trenchard, 142 Fed. 16, 23, 73 C. C. A. 202..... 488
Kellyville Coal Co. v. Petraytis, 195 Ill. 215, 63 N. E. 94, 88 Am. St. Rep. 191.... 445
Kendall v. Klapperthal, 202 Pa. 596, 52 Atl. 92..... 147
Kern v. Huidekoper, 103 U. S. 485, 26 L. Ed. 354..... 617
Kerr v. Moon, 9 Wheat. 565, 6 L. Ed. 161 543
Keystone Mfg. Co. v. Adams, 151 U. S. 139, 14 Sup. Ct. 295, 38 L. Ed. 103..... 629, 635, 639
Kiley v. Chicago, M. & St. P. R. Co. (Wis.) 119 N. W. 309..... 126
Kimball, The, 3 Wall. 37, 45, 18 L. Ed. 50 468
King v. McAndrews, 111 Fed. 860, 50 C. C. A. 29..... 590
King v. Patterson, 49 N. J. Law, 417, 9 Atl. 705, 60 Am. Rep. 622..... 339
Kingston Realty Co., In re, 160 Fed. 445, 87 C. C. A. 406.....499, 648, 649
Kinkead v. U. S., 150 U. S. 483, 14 Sup. Ct. 172, 37 L. Ed. 1152..... 306
Kirk v. Hamilton, 102 U. S. 68, 79, 26 L. Ed. 79..... 420
Kirkpatrick v. St. Louis & S. F. R. Co., 159 Fed. 855, 87 C. C. A. 35..... 598
Kissack v. Bourke, 224 Ill. 352, 79 N. E. 619 381
Klinck v. Colby, 46 N. Y. 427, 7 Am. Rep. 360.....338, 339
Knapp v. McCaffrey, 177 U. S. 638, 648, 20 Sup. Ct. 824, 44 L. Ed. 921..... 481
Knoxville Water Co. v. Knoxville, 200 U. S. 22, 26 Sup. Ct. 224, 50 L. Ed. 353..... 262
Kolin, In re, 134 Fed. 557, 67 C. C. A. 481 55
Kreigh v. Westinghouse & Co., 214 U. S. 249-256, 29 Sup. Ct. 619, 53 L. Ed. 984 511

Lamb Knit Goods Co. v. Lamb Glove & Mitten Co., 120 Fed. 267, 56 C. C. A. 547 80
Lamb v. Stone, 11 Pick. (Mass.) 527, 534 320

Page

Landes v. Brant, 10 How. 348, 13 L. Ed. 449 590
Landis v. McDonald, 88 Mo. App. 335..549, 550
Landon v. Watkins, 61 Minn. 137, 63 N. W. 615..... 338
Lange v. Union Pac. R. Co., 126 Fed. 338, 62 C. C. A. 48..... 619
Langford v. Boston & A. R. Co., 144 Mass. 431, 11 N. E. 697..... 60
Lathrop v. Drake, 91 U. S. 516, 23 L. Ed. 414 53
Learned v. Castle, 78 Cal. 454, 18 Pac. 872, 21 Pac. 11.....223, 239
Lee, Ex parte, Fed. Cas. No. 8,178..... 123
Leeds & Catlin v. Victor Talking Mach. Co., 213 U. S. 301, 29 Sup. Ct. 495, 53 L. Ed. 805..... 299
Leffingwell v. Warren, 67 U. S. 599, 603, 17 L. Ed. 261..... 445
Leslie, In re (D. C.) 9 Am. Bankr. Rep. 565, 119 Fed. 406..... 494
Lewis v. Harwood, 28 Minn. 428, 10 N. W. 586..... 289
Lincoln v. Claflin, 7 Wall. 132, 137, 19 L. Ed. 106.....318, 319
Lindeke v. Associations Realty Co., 146 Fed. 630, 77 C. C. A. 56..... 589
Linz v. Massachusetts Mut. Life Ins. Co., 8 Mo. App. 365..... 129
List v. Pennsylvania, 131 U. S. 396, 9 Sup. Ct. 794, 33 L. Ed. 222.....423, 424
Little v. Hackett, 116 U. S. 366, 6 Sup. Ct. 391, 29 L. Ed. 652..... 512
Little Rock & M. R. Co. v. Barry, 28 C. C. A. 644, 648, 84 Fed. 944, 948, 43 L. R. A. 349..... 50
Locke v. Ashton, 18 L. J. Q. B. 76..... 59
Locke v. Bradstreet Co. (C. C.) 22 Fed. 771 340
Locke v. Trust Co., 140 N. Y. 135, 35 N. E. 578..... 163
Loewe v. Lawlor, 208 U. S. 274, 28 Sup. Ct. 301, 52 L. Ed. 488..... 456
London & N. W. R. Co. v. Evershed, 3 App. Cas. Law Rep. 1038..... 388
Long v. Kansas City Stockyards Co., 107 Mo. 298, 17 S. W. 656, 28 Am. St. Rep. 413 543
Loom Co. v. Higgins, 105 U. S. 580, 591, 26 L. Ed. 1177..... 449
Loomis v. Render, 41 Hun, 268..... 58
Louisville Trust Co. v. Stone, 107 Fed. 305, 46 C. C. A. 299..... 16
Louisville & N. R. Co. v. Burke, 6 Cold. (Tenn.) 45..... 563
Louisville & N. R. Co. v. Gaines (C. C.) 3 Fed. 266..... 261
Louisville & N. R. Co. v. McKenna, 75 Tenn. 313.....564, 565
Lustre, The, 3 Haggard, Adm. 154..... 353
Luzerne, The (D. C.) 148 Fed. 133; 157 Fed. 391, 85 C. C. A. 328..... 279
Lyman v. Bank of United States, 12 How. 225, 243, 13 L. Ed. 965..... 468

McCall v. McDowell, Fed. Cas. No. 8,673 58
McCann v. Chicago, M. & St. P. R. Co., 105 Fed. 480, 44 C. C. A. 566..... 576

Page

McChord v. Louisville, etc., R. Co., 183 U. S. 483, 500, 22 Sup. Ct. 165, 46 L. Ed. 289 143
McClelland v. McClelland (Tex. Civ. App.) 37 S. W. 350; 46 Tex. Civ. App. 26, 101 S. W. 1171 669
McCormick v. Talcott, 20 How. 402, 15 L. Ed. 930 100
McDonald v. Miller (C. C.) 84 Fed. 344.. 28
McDonald v. The Nimbus, 137 Mass. 360 480
McDonough, In re (D. C.) 49 Fed. 360.... 665
McDowall v. Great Western R. Co., 2 Q. B. (1903) 331 461
McElroy v. British American Assur. Co., 94 Fed. 990, 997, 36 C. C. A. 615 533
McElvain v. Hardesty, 94 C. C. A. 399, 169 Fed. 31 549
Machine Co. v. Murphy, 97 U. S. 120, 125, 24 L. Ed. 935 ..... 630, 632
McKenzie, In re, 142 Fed. 383, 73 C. C. A. 483 ..... 538, 545
Mackey v. Daniel, 59 Md. 484 530
Mackin v. U. S., 117 U. S. 352, 6 Sup. Ct. 777, 29 L. Ed. 909 174
McLaine v. Head & Dowst, 71 N. H. 294, 52 Atl. 545, 58 L. R. A. 462, 93 Am. St. Rep. 522 511
McMahon, In re, 147 Fed. 684, 689, 77 C. C. A. 668 ..... 537, 538
McMillan v. Spider Lake S. & L. Co., 115 Wis. 332, 91 N. W. 979, 60 L. R. A. 589, 95 Am. St. Rep. 947 ..... 444, 445
McNamara, In re, 2 Am. Bankr. Rep. 566 492
MacNichol Const. Co., In re, 140 Fed. 840, 72 C. C. A. 252 499
Macon & I. S. Electric St. Ry. v. Holmes, 103 Ga. 655, 30 S. E. 563 514
McSherry Mfg. Co. v. Dowagiac Mfg. Co., 101 Fed. 716, 41 C. C. A. 627 104
Mahoning Ore & Steel Co. v. Blomfelt, 91 C. C. A. 390, 163 Fed. 827, 833 ..... 445, 446
Maillard v. Duke of Argyle, 6 Man. & Granger's Rep. (46 E. C. L.) 40, 46 468
Maiorano v. Baltimore & O. R. Co., 216 Pa. 402, 65 Atl. 1077, 116 Am. St. Rep. 778 445
Mandeville v. Guernsey, 51 Barb. (N. Y.) 99 59
Manning v. Tacoma R. & P. Co., 34 Wash. 406, 75 Pac. 994 394
Manufacturing Co. v. Cowing, 105 U. S. 253, 26 L. Ed. 987 635
Mark Lane, The, 15 P. D. 135, 137 353
Martin v. Ellerbe's Adm'r, 70 Ala. 326.. 123
Martin v. Pittsburg & L. E. R. Co., 203 U. S. 284, 27 Sup. Ct. 100, 51 L. Ed. 184 504
Martin v. Railroad Co., 166 U. S. 399, 17 Sup. Ct. 603, 41 L. Ed. 1051 511
Martin v. U. S., 168 Fed. 198, 202, 203, 93 C. C. A. 484 665
Massie v. Watts, 6 Cranch, 148, 157, 3 L. Ed. 181 238
Maud Carter, The (D. C.) 29 Fed. 156 482, 484
Mehan v. Thompson, 71 Me. 492 485
Menken v. Atlanta, 131 U. S. 405, 9 Sup. Ct. 794, 33 L. Ed. 221 ..... 423, 424
Menze v. Schmidt (C. C.) 154 Fed. 845.. 103
Merchants' Ins. Co. v. Buckner, 98 Fed. 222, 39 C. C. A. 19-30 338

Page

Metamora, The, 144 Fed. 936, 940, 75 C. C. A. 576 639
Metsker v. Bonebrake, 108 U. S. 66, 2 Sup. Ct. 351, 27 L. Ed. 654 634
Milby v. U. S., 109 Fed. 638, 640, 641, 48 C. C. A. 574 665
Milgraum, In re (D. C.) 12 Am. Bankr. Rep. 306, 129 Fed. 827 492
Milkman v. Ordway, 106 Mass. 232 224
Miller v. Rickey (C. C.) 146 Fed. 577.. 615
Miller v. U. S., 66 C. C. A. 399, 413, 133 Fed. 337, 351 8
Miller & Lux v. Rickey (C. C.) 127 Fed. 573 237
Mills, In re, 135 U. S. 263, 10 Sup. Ct. 762, 34 L. Ed. 107 428
Minneapolis & St. L. R. Co. v. Herrick, 127 U. S. 210, 8 Sup. Ct. 1176, 32 L. Ed. 109 126
Minnesota v. Hitchcock, 185 U. S. 373, 387, 22 Sup. Ct. 650, 46 L. Ed. 954 144
Minnesota v. Northern Securities Co., 184 U. S. 199, 235, 22 Sup. Ct. 308, 46 L. Ed. 499 554
Minnesota Iron Co. v. Kline, 199 U. S. 593, 26 Sup. Ct. 159, 50 L. Ed. 322 258
Mississippi & M. R. Co. v. Ward, 67 U. S. 485, 17 L. Ed. 311 ..... 234, 235
Missouri Pac. R. Co. v. Mackey, 127 U. S. 205, 8 Sup. Ct. 1161, 32 L. Ed. 107... 126
Missouri Pac. R. Co. v. Vandeventer, 26 Neb. 222, 41 N. W. 998, 3 L. R. A. 129.. 202
Missouri Valley Land Co. v. Wiese, 208 U. S. 234, 28 Sup. Ct. 294, 52 L. Ed. 466 382
Mitchell v. Dors, 6 Ves. 147 222
Monongahela Co. v. Pittsburgh Co., 196 Pa. 25, 46 Atl. 99, 79 Am. St. Rep. 685 147
Montgomery Co. v. Dienelt, 133 Pa. 585, 19 Atl. 428, 19 Am. St. Rep. 663 147
Moors v. Kidder, 106 N. Y. 32, 12 N. E. 818 164
Morgan v. First Nat. Bank, 145 Fed. 466, 76 C. C. A. 236 538
Morley Mach. Co. v. Lancaster, 129 U. S. 263, 9 Sup. Ct. 299, 32 L. Ed. 715.... 95
Morris Run Coal Co. v. Barclay Coal Co., 68 Pa. 173, 186, 8 Am. Rep. 159... 580
Mt. Washington, The, 17 Fed. Cas. 925... 364
Mowry v. Whitney, 14 Wall. 620, 20 L. Ed. 860 629
Mueller v. Nugent, 184 U. S. 1, 14, 22 Sup. Ct. 269, 274, 46 L. Ed. 405 ..... 121, 398
Mulhall v. Fallon, 176 Mass. 266, 57 N. E. 386, 54 L. R. A. 934, 79 Am. St. Rep. 309 446
Mullins v. Railroad Co., 201 Mass. 38, 87 N. E. 476 461
Muncie Pulp Co., In re, 151 Fed. 732, 81 C. C. A. 116 ..... 54, 540
Munroe v. Ley, 156 Fed. 468, 84 C. C. A. 278 462
Murphy v. Countiss, 1 Har. (Del.) 143.. 59
Murphy v. U. S., 162 Fed. 871, 89 C. C. A. 561 471
Murray v. South Carolina R. Co., 1 McMul. (S. C.) 385, 36 Am. Dec. 268 619
Mushet's Case, Com. Dec. 1870, p. 105... 298
Muskogee Nat. Tel. Co. v. Hall, 118 Fed. 382, 55 C. C. A. 208 254

Page

Nashville, C. & St. L. Ry. v. Taylor (C. C.) 86 Fed. 168, 184 16
National Ulster County Bank v. Madden, 114 N. Y. 281, 21 N. E. 408, 11 Am. St. Rep. 633 159
Newman v. New York, L. E. & W. R. Co., 54 Hun, 335, 7 N. Y. Supp. 560 60
Newport News & M. V. Co. v. Pace, 158 U. S. 36, 37, 15 Sup. Ct. 743, 39 L. Ed. 887 519
New York Cent. R. Co. v. Miller, 202 U. S. 584, 595, 26 Sup. Ct. 714, 50 L. Ed. 1155 258
New York Cent. R. Co. v. U. S., 212 U. S. 481, 491, 497, 29 Sup. Ct. 304, 53 L. Ed. 613 586
New York Indians v. U. S., 170 U. S. 1, 18 Sup. Ct. 531, 42 L. Ed. 927 306
New York Life Ins. Co. v. Rankin, 162 Fed. 103, 108, 89 C. C. A. 103 8
New York Tunnel Co., 92 C. C. A. 202, 166 Fed. 284 499
Noble v. Seattle, 19 Wash. 133, 52 Pac. 1013, 40 L. R. A. 822 394
Noel, In re (D. C.) 137 Fed. 694 398
Noonan v. Chester Park Athletic Club Co., 99 Fed. 90, 39 C. C. A. 426 107
Noonan v. Orton, 32 Wis. 106 340
Nord v. Gray, 80 Minn. 143, 82 N. W. 1082 338
North American Transp. Co. v. Sammuels, 146 Fed. 48, 55, 76 C. C. A. 506 .. 533
Northern I. R. Co. v. Michigan Cent. R. Co., 56 U. S. 232, 14 L. Ed. 674 234
Northern Pac. R. Co. v. Charless, 162 U. S. 359, 16 Sup. Ct. 848, 40 L. Ed. 999 ... 511
Northern Pac. R. Co. v. Hussey, 61 Fed. 231, 9 C. C. A. 463 222
Northern Pac. Ry. v. Jones, 144 Fed. 47, 49, 75 C. C. A. 205 562
Northern Securities Co. v. U. S., 193 U. S. 197, 24 Sup. Ct. 436, 48 L. Ed. 679 ... 456
Northwestern Exch. Tel. Co. v. Minneapolis, 81 Minn. 140, 83 N. W. 527, 186 N. W. 69, 53 L. R. A. 175 260
Noyes Bros., In re, 127 Fed. 286, 62 C. C. A. 218 492

Oakes v. Mase, 165 U. S. 363, 364, 17 Sup. Ct. 345, 41 L. Ed. 746 445
Oakley v. Schoonmaker, 15 Wend. (N. Y.) 226 297
O'Brien v. Wheelock, 95 Fed. 883, 37 C. C. A. 309; 184 U. S. 450, 22 Sup. Ct. 354, 46 L. Ed. 636 523
Ogden City v. Armstrong, 168 U. S. 224, 236, 18 Sup. Ct. 98, 42 L. Ed. 444 14
Ohio Copper Min. Co. v. Hutchings, 96 C. C. A. 653, 172 Fed. 201 598
Ohio & M. R. Co. v. Walker, 113 Ind. 196, 15 N. E. 234, 3 Am. St. Rep. 638 .. 514
O. H. Jewell Filter Co. v. Jackson, 72 C. C. A. 304, 308, 140 Fed. 340, 344 630
Oliver v. Blair (Cal.) 5 Pac. 917 529
Omaha Horse R. Co. v. Cable Tramway Co. (C. C.) 32 Fed. 727, 729, 730 224
Oolagah Coal Co. v. McCaleb, 68 Fed. 86, 15 C. C. A. 270 222
Ormsby v. Union Pac. R. Co. (C. C.) 4 Fed. 706 202

Page

Orr & Lockett Hardware Co. v. Murray, 163 Fed. 54, 56, 89 C. C. A. 492 635
Overland Cotton Mill Co. v. People, 32 Colo. 263, 269, 75 Pac. 924, 105 Am. St. Rep. 74 586
Owenson v. Morse, 7 Term Rep. 64, 66 ... 468

Pacific Exp. Co. v. Seibert, 142 U. S. 339, 12 Sup. Ct. 250, 35 L. Ed. 1035 14
Pacific Rolling Mills Co. v. James Street Const. Co., 68 Fed. 966, 969, 16 C. C. A. 68 445
Paillard v. Bruno (C. C.) 29 Fed. 864 295, 296
Palmer v. Tingle, 55 Ohio St. 423, 45 N. E. 313 ..... 522, 523, 524, 525
Paper Bag Patent Case, 210 U. S. 405, 418, 28 Sup. Ct. 748, 52 L. Ed. 1122 633
Parker v. Appert, 75 O. G. 1201 307
Parshall v. Eggert, 54 N. Y. 18 168
Patek v. American Smelting & Refining Co., 154 Fed. 190, 83 C. C. A. 284 445
Pattee v. Moline Plow Co. (C. C.) 9 Fed. 821 450
Pavement Co. v. Elizabeth, 4 Fish. Pat. Cas. 189; Fed. Cas. No. 312 100
Paxson v. Brown, 61 Fed. 874, 10 C. C. A. 135, 143 420
Peck v. Jenness, 48 U. S. 612, 12 L. Ed. 841 617
Peirce v. Van Dusen, 78 Fed. 693, 24 C. C. A. 280, 69 L. R. A. 705 126
Peiser, In re (D. C.) 115 Fed. 199 54
Penn v. Lord Baltimore, 1 Ves. Sr. 443, 454 238
Pennsylvania Knitting Mills v. Bibb Co., 12 Pa. Super. Ct. 346 147
Pennsylvania R. Co. v. Hughes, 191 U. S. 477, 24 Sup. Ct. 132, 48 L. Ed. 268 203, 503
Pennsylvania R. Co. v. Truck Co., 110 U. S. 490, 4 Sup. Ct. 220, 28 L. Ed. 222 109
Penny v. Central Coal & Coke Co., 71 C. C. A. 135, 139, 138 Fed. 769, 773 603
People v. Applegarth, 64 Cal. 229, 30 Pac. 805 256
People v. Detroit White Lead Works, 82 Mich. 471, 46 N. W. 735, 737, 9 L. R. A. 722 586
People v. Dobbins, 73 Cal. 257, 14 Pac. 860 256
People v. Keating, 61 Hun, 260, 16 N. Y. Supp. 748 428
People v. Murray, 41 Cal. 66, 67 581
People v. Pratt, 22 Hun, 300 58
People v. Stephens, 62 Cal. 209 255
People v. Ward, 105 Cal. 335, 341, 38 Pac. 945 581
People ex rel. v. Murphy, 185 Ill. 623, 57 N. E. 820 428
People's United States Bank v. Gilson, 88 C. C. A. 332, 338, 161 Fed. 286, 292 12
Perkins v. Pike, 42 Me. 141, 66 Am. Dec. 267 486
Perry v. Rogers, 157 N. Y. 251-255, 51 N. E. 1021 511
Peter v. Beverly, 10 Pet. 532, 568, 9 L. Ed. 522 468
Peyton v. Desmond, 63 C. C. A. 651, 656, 657, 129 Fed. 1, 6, 7 604
Phelps v. McDonald, 99 U. S. 298, 308, 25 L. Ed. 473 237

Page

Philadelphia & Lewis Trans. Co., In re (D. C.) 114 Fed. 403 499
Phillips v. Carver, 99 Wis. 561, 75 N. W. 432 399
Phillips v. Iola Portland Cement Co., 125 Fed. 593, 61 C. C. A. 19 457
Philpott v. Missouri Pac. R. Co., 85 Mo. 164 446
Pittsburgh, C., C. & St. L. R. Co. v. Backus, 154 U. S. 421, 425, 428, 429, 430, 435, 436, 14 Sup. Ct. 1114, 38 L. Ed. 1031 .....5, 6, 7, 9, 11, 12
Pittsburgh Const. Co. v. West Side Belt R. Co., 154 Fed. 929, 83 C. C. A. 501, 11 L. R. A. (N. S.) 1145 145
Pittsburgh, etc., R. Co. v. Naylor, 73 Ohio St. 115, 76 N. E. 505, 3 L. R. A. (N. S.) 473, 112 Am. St. Rep. 701 446
Plaut v. Graham Mfg. Co. (D. C.) 159 Fed. 754 398
Pocahontas Colleries Co. v. Ruskas' Adm'r, 104 Va. 278, 51 S. E. 449 446
Pohl v. Anchor Brewing Co., 134 U. S. 381, 10 Sup. Ct. 577, 33 L. Ed. 953 ..... 296, 299, 304
Polack v. Pioche, 35 Cal. 416, 423, 95 Am. Dec. 115 241
Pomeroy's Lessee v. State Bank of Indiana, 1 Wall. 592, 602, 17 L. Ed. 638 519
Port Darlington Harbour Co. v. Squair, 18 U. C. Q. B. 533 468
Porter v. Lazear, 109 U. S. 84, 3 Sup. Ct. 58, 27 L. Ed. 865 545
Postal Tel. Cable Co. v. Adams, 155 U. S. 688, 697, 698, 15 Sup. Ct. 268, 360, 39 L. Ed. 311 9
Potter v. U. S., 122 Fed. 49, 55, 58 C. C. A. 231, 237 519
Powell v. Hodgetts, 2 Carrington & Payne, 432 59
Powers v. Detroit & G. H. R. Co., 201 U. S. 543, 556, 26 Sup. Ct. 556, 557, 50 L. Ed. 860 258
P. P. Mast & Co. v. Superior Drill Co., 154 Fed. 45, 57, 83 C. C. A. 157 638
Prentice v. Duluth, etc., Forwarding Co., 58 Fed. 437, 443, 7 C. C. A. 293, 298 ... 467
Pressed Steel Car Co. v. Eastern R. Co., 121 Fed. 609, 611, 57 C. C. A. 635, 637 467
Price v. Com., 21 Grat. (Va.) 859 175
Price v. U. S., 165 U. S. 311, 17 Sup. Ct. 366, 41 L. Ed. 727 181
Priestly v. Fowler, 3 Mees & Welsb. 1 .. 619
Protective Co. v. Burglar Alarm Co. (C. C.) 21 Fed. 458 295
Putnam v. Lewis, 8 Johns. (N. Y.) 389 468

Queen v. Hepburn, 11 U. S. 290, 3 L. Ed. 348 376
Queen of the Pacific, The (D. C.) 21 Fed. 460, 471 353
Quimby Co., In re (D. C.) 121 Fed. 139; 126 Fed. 167, 61 C. C. A. 111 .....497, 648
Quinn v. Scott, 22 Minn. 456 339

Ragnarok, The (D. C.) 158 Fed. 694 364
Railroad Co. v. Acuff, 92 Tenn. 26, 20 S. W. 348 563

Page

Railroad Co. v. Andrews, 130 Fed. 65, 64 C. C. A. 399 557
Railroad Co. v. Burke, 6 Cold. (Tenn.) 45 564
Railroad Co. v. Caulfield, 63 Fed. 396, 11 C. C. A. 552 557
Railroad Co. v. Chapman, 140 Fed. 129, 71 C. C. A. 523 557
Railroad Co. v. Clarkson, 147 Fed. 397, 77 C. C. A. 575 557
Railroad Co. v. Cundieff, 171 Fed. 319, 96 C. C. A. 211 557
Railroad Co. v. Donovan, 160 Fed. 826, 87 C. C. A. 600 557
Railroad Co. v. Foster, 88 Tenn. 672, 13 S. W. 694, 14 S. W. 428 563
Railroad Co. v. Hicks, 89 Tenn. 301, 17 S. W. 1036 564
Railroad Co. v. Holland, 117 Tenn. 257, 96 S. W. 758 564
Railroad Co. v. Howard, 90 Tenn. 144, 19 S. W. 116 564
Railroad Co. v. Ives, 63 Fed. 791, 11 C. C. A. 433 557
Railroad Co. v. Hardy, 94 Fed. 294, 37 C. C. A. 359 557
Railroad Co. v. McArthur, 53 Fed. 464, 3 C. C. A. 594 557
Railroad Co. v. Mares, 123 U. S. 710, 713, 8 Sup. Ct. 321, 31 L. Ed. 296 518
Railroad Co. v. Meacham, 91 Tenn. 428, 431, 19 S. W. 232 561
Railroad Co. v. Munger, 168 Fed. 690, 94 C. C. A. 176 557
Railroad Co. v. Reidmond, 11 Lea (Tenn.) 205 564
Railroad Co. v. Robertson, 9 Heisk. (Tenn.) 276 564
Railroad Co. v. Rush, 15 Lea (Tenn.) 145, 149, 150 564
Railroad Co. v. Sowell, 90 Tenn. 17, 15 S. W. 837 202
Railroad Co. v. Stepp, 164 Fed. 785, 90 C. C. A. 431 557
Railroad Co. v. U. S., 101 U. S. 639, 25 L. Ed. 1074 615
Railroad Co. v. Williams, 170 Fed. 1020, 95 C. C. A. 670 557
Railroad Co. v. Williford, 115 Tenn. 108, 88 S. W. 178 561
Railroad & Telephone Cos. v. State Board of Equalizers (C. C.) 85 Fed. 302, 307, 318 16
Randall v. Krieger, 23 Wall. 137, 148, 23 L. Ed. 124 542
Raymond v. Chicago Traction Co., 207 U. S. 20, 36, 37, 38, 28 Sup. Ct. 7, 52 L. Ed. 78 .....6, 16
Raymond v. San Gabriel Valley Land & Water Co., 53 Fed. 883, 4 C. C. A. 89 399
Reagan v. Farmers' Loan & Trust Co., 154 U. S. 362, 391, 14 Sup. Ct. 1047, 38 L. Ed. 1014 16
Reece Button Hole Mach. Co. v. Globe Button Hole Mach. Co., 61 Fed. 958, 964, 10 C. C. A. 194, 200 633
Regina v. Heane, 9 Coxe, C. C., 433 183
Reissner v. Sharp, 4 Ban. & A. 366, 16 Blatchf. 383, Fed. Cas. No. 11,689 295

Page

Renigar v. U. S., 172 Fed. 646, 97 C. C. A. 172 184
Renlund v. Commodore Min. Co., 89 Minn. 41, 93 N. W. 1057, 99 Am. St. Rep. 534 446
Resurrection Gold Min. Co. v. Fortune Gold Min. Co., 64 C. C. A. 180, 191, 192, 129 Fed. 668, 679, 680 605
Ricard v. Williams, 7 Wheat. 59, 109, 119, 5 L. Ed. 398 603
Rich v. Railroad Co., 149 Fed. 79, 78 C. C. A. 663 557
Richards v. Dower, 64 Cal. 64, 28 Pac. 113 239
Richmond v. Southern Bell Tel. Co., 174 U. S. 761, 19 Sup. Ct. 778, 43 L. Ed. 1162 260
Rickey Land & Cattle Co. v. Miller & Lux, 152 Fed. 11, 81 C. C. A. 207 238
Ritchie v. Widdemer, 59 N. J. Law, 290, 35 Atl. 825 339
Roanoke, The, 189 U. S. 185, 23 Sup. Ct. 491, 47 L. Ed. 770 484
Robbins v. Shelby Taxing Dist., 120 U. S. 489, 7 Sup. Ct. 592, 30 L. Ed. 694 456
Roberts v. Great Northern R. Co., 161 Fed. 239 444
Robertson v. Blake, 94 U. S. 728, 24 L. Ed. 245 628
Robinson v. Denver City Tramway Co., 164 Fed. 174, 90 C. C. A. 160 513
Robinson v. State, 1 Lea (Tenn.) 673 127
Robinson v. Trufant, 97 Mich. 410, 56 N. W. 769 399
Rochester German Ins. Co. v. Schmidt (C. C.) 126 Fed. 998 ..... 404, 406
Rochford, In re, 124 Fed. 182, 59 C. C. A. 388 ..... 55, 398
Rogers v. Cincinnati, N. O. & T. P. R. Co., 136 Fed. 573, 69 C. C. A. 321 ..... 563, 564
Rogers v. Ritter, 12 Wall. 317, 320, 20 L. Ed. 417 566
Romano v. Capital Brick & Pipe Co., 125 Iowa, 591, 101 N. W. 437, 68 L. R. A. 132, 106 Am. St. Rep. 323 445
Root v. Railroad Co., 105 U. S. 189, 214, 215, 26 L. Ed. 975 ..... 28, 634
Rosenfeld v. Peoria, D. & E. R. Co., 103 Ind. 121, 2 N. E. 344, 53 Am. Rep. 500 202
Rosen v. U. S., 161 U. S. 29, 16 Sup. Ct. 434, 480, 40 L. Ed. 606 181
Ross-Mecham Foundry Co. v. Southern Car & Foundry Co. (D. C.) 124 Fed. 403 54
Rousseau v. Brown, 104 O. G. 1120 307
Rown v. Christopher & Tenth St. R. Co., 34 Hun, 471 59
Rubber Co. v. Goodyear, 9 Wall. 788, 19 L. Ed. 566 ..... 615, 629
Ruggles v. Eddy, 20 Fed. Cas. No. 12,116 635
Rumble v. U. S., 143 Fed. 772, 776, 75 C. C. A. 30 665
Runnion v. Ramsay, 93 N. C. 410 529
Russell v. Allerton, 108 N. Y. 288, 292, 15 N. E. 391 467
Russell v. Myers (N. J.) 67 Atl. 1016 483

Sabine, The, 101 U. S. 390, 25 L. Ed. 982 352
Sabin v. Camp (C. C.) 98 Fed. 974 ..... 165, 170

Page

Sailors' Union of Pacific v. Hammond Lumber Co., 156 Fed. 450, 85 C. C. A. 16 324
St. Joseph & G. I. R. Co. v. Palmer, 38 Neb. 563, 56 N. W. 957, 22 L. R. A. 335 202
St. Louis, I. M. & S. Ry. v. Taylor, 210 U. S. 281, 28 Sup. Ct. 616, 52 L. Ed. 1061 286
St. Louis & S. F. R. Co. v. Bennett, 69 Fed. 525, 16 C. C. A. 300 562
St. Louis & S. F. R. Co. v. Summers, 173 Fed. 358, 97 C. C. A. 328 332
St. Quentin, The (D. C.) 162 Fed. 883, 884 ..... 24, 25
Saling v. German Sav. Bank, 8 N. Y. Supp. 469 529
Salt Lake City v. Smith, 104 Fed. 457, 462, 43 C. C. A. 637, 643, 644 467
Sampson v. State, 124 Ga. 776, 53 S. E. 332 177
Sanders v. White, 22 Ga. 103 529
Sandringham, The (D. C.) 10 Fed. 556, 570 353
Sayer v. Wagstaff, 5 Beavan's Reports, 415, 423, 49 Eng. Rep. 639, 642 468
Scheerschmidt v. Smith, 74 Minn. 224, 77 N. W. 34 381
Schermerhorn, In re, 145 Fed. 341, 76 C. C. A. 215 398
Schomberg v. Walker, 132 Cal. 224, 64 Pac. 290 339
Schreiber v. Sharpless, 110 U. S. 76, 3 Sup. Ct. 423, 28 L. Ed. 65 423
Schrom, In re (D. C.) 97 Fed. 760 53
Scott v. Neely, 140 U. S. 106, 11 Sup. Ct. 712, 35 L. Ed. 358 404
Scott v. Shepard, 3 Wils. 403; 2 W. B. 892 ..... 60, 212
Scotland County v. Hill, 112 U. S. 186, 5 Sup. Ct. 95, 28 L. Ed. 692 127
Scottish Union, etc., Ins. Co. v. Mohlman (C. C.) 73 Fed. 66 ..... 404, 406
Scruggs v. Baltimore & O. R. Co. (C. C.) 5 McCrary, 590, 18 Fed. 318 202
Seymour v. McCormick, 57 U. S. 480, 14 L. Ed. 1024 ..... 628, 629, 635, 637
Seymour v. Osborne, 11 Wall. 516, 547, 20 L. Ed. 33 630
Sharpe v. Doyle, 102 U. S. 686, 26 L. Ed. 277 55
Sharpe v. Wakefield, 22 Q. B. D. 242 260
Shatto v. Erie R. Co., 121 Fed. 678, 59 C. C. A. 1 576
Shea v. Manhattan R. Co. (Com. Pl.) 8 N. Y. Supp. 332 59
Shelby v. Guy, 11 Wheat. 361, 6 L. Ed. 495 258
Shelton v. Platt, 139 U. S. 591, 11 Sup. Ct. 646, 35 L. Ed. 273 14
Sherman v. Bingham, Fed. Cas. No. 12,762 53
Shields v. Barrow, 17 How. 130, 15 L. Ed. 158 614
Shields v. Thomas, 59 U. S. 253, 262, 15 L. Ed. 368 223
Simmons v. Com., 89 Va. 157, 15 S. E. 387 175
Simpson v. State, 92 Ga. 41, 17 S. E. 984, 22 L. R. A. 248, 44 Am. St. Rep. 75 236

Page
Simpson County v. Wisner-Cox Lumber & Mfg. Co., 170 Fed. 52, 95 C. C. A. 227 666
Singleton v. Felton, 101 Fed. 526, 528, 42 C. C. A. 57, 59 562
Slaughter-House Cases, 77 U. S. 273, 291, 19 L. Ed. 915 422
Smith v. Fond du Lac, 8 Fed. 289 259
Smith v. Gale, 144 U. S. 517, 12 Sup. Ct. 674, 36 L. Ed. 521 289
Smith v. John L. Roper Lumber Co., 147 N. C. 62, 60 S. E. 717, 125 Am. St. Rep. 535 129
Smith v. Richards, 13 Pet. 26, 36, 10 L. Ed. 42 488
Smith v. Tonstall, Carthew, 3 317
Société Anonyme v. General Electric Co. (C. C.) 97 Fed. 604 ..... 293, 299
Society, etc., v. Wheeler, 2 Gall. 104-139, Fed. Cas. No. 13,156 393
Solomons v. U. S., 137 U. S. 346, 11 Sup. Ct. 88, 34 L. Ed. 667 105
Southern Bell Telephone & Telegraph Co. v. Richmond (C. C.) 78 Fed. 858 254
Southern Pac. Co. v. Arnett, 126 Fed. 75, 81, 61 C. C. A. 131, 137 519
Southern Pac. Co. v. Maloney, 136 Fed. 171, 69 C. C. A. 83 519
Southern Pac. Co. v. Poole, 160 U. S. 438, 16 Sup. Ct. 338, 40 L. Ed. 485 37
Southern R. Co. v. Simpson, 131 Fed. 705, 65 C. C. A. 563 262
Spreckels, State of California (D. C.) 45 Fed. 649 364
Spring Co. v. Edgar, 99 U. S. 645, 658, 25 L. Ed. 487 277
Springer v. Railroad Co., 161 Fed. 801, 88 C. C. A. 619 557
Springfield Mill. Co. v. Barnard & Leas Mfg. Co., 81 Fed. 261, 265, 26 C. C. A. 389, 393 15
Standard Oil Co. v. Anderson, 212 U. S. 216-226, 29 Sup. Ct. 252, 53 L. Ed. 480 510
Standard Oil Co. v. Parkinson, 82 C. C. A. 29, 30, 152 Fed. 681, 682 49
Star Brass Works v. General Electric Co., 111 Fed. 398, 49 C. C. A. 409 89
Starr v. U. S., 153 U. S. 614, 626, 14 Sup. Ct. 919, 38 L. Ed. 841 464
State v. Bordeaux, 93 N. C. 563 176
State v. Cox, 28 N. C. 445 176
State v. Creighton, 1 Nott & McC. (S. C.) 256 176
State v. Hall, 114 N. C. 909, 19 S. E. 602, 28 L. R. A. 59, 41 Am. St. Rep. 822 236
State v. Heaton, 23 W. Va. 778 175
State v. Hunter, 50 Kan. 302, 32 Pac. 37; 181 Mo. 338, 80 S. W. 955 ..... 493, 581
State v. Knowles, 90 Md. 654, 45 Atl. 878, 49 L. R. A. 695 261
State v. Lake Erie Iron Co., 33 Ohio Law Bul. 6 525
State v. Nebraska Tel. Co., 127 Iowa, 194, 103 N. W. 120 260
State ex rel. Rocky Mountain Bell Tel. Co. v. Red Lodge, 30 Mont. 338, 76 Pac. 758 260
State ex rel. Wisconsin Tel. Co. v. Sheboygan, 114 Wis. 505, 90 N. W. 441, 442 260

Page
State Railroad Tax Cases, 92 U. S. 575, 605, 611, 613, 614, 23 L. Ed. 663 ..... 9, 11, 14
Stearns v. Hall, 9 Cush. (Mass.) 31 381
Steinhart v. U. S. (C. C.) 121 Fed. 442 44
Stevens, In re, Fed. Cas. No. 13,392 543
Stewart v. Gardner, 10 Ohio Cir. Ct. R. (N. S.) 408; 78 Ohio St. 451, 85 N. E. 1132 525
Stewart v. U. S., 119 Fed. 89, 93, 55 C. C. A. 641 665
Stirrat v. Excelsior Mfg. Co., 61 Fed. 980, 10 C. C. A. 216 628
Stokes v. O'Fallon, 2 Mo. 32 543
Stokes v. U. S., 157 U. S. 187, 188, 15 Sup. Ct. 617, 39 L. Ed. 667 664
Stone v. Bank of Commerce, 174 U. S. 412, 421, 19 Sup. Ct. 747, 43 L. Ed. 1028 8
Stone v. Union Pac. R. Co., 32 Utah, 185, 89 Pac. 715 505
Stone v. U. S., 167 U. S. 178, 182, 17 Sup. Ct. 778, 42 L. Ed. 127 604
Storm v. U. S., 94 U. S. 76, 81, 24 L. Ed. 42 566
Stout, In re (D. C.) 109 Fed. 794 492
Summit Tp. v. New York, etc., Tel. Co., 57 N. J. Eq. 123, 41 Atl. 146 255
Sunset Telephone & Telegraph Co. v. Eureka (C. C.) 172 Fed. 755 260
Sutter Bros., In re (D. C.) 131 Fed. 654 54
Swan v. Tappan, 5 Cush. (Mass.) 104 339
Sweet & Carpenter v. James, 2 R. I. 270, 294, 297 468
Swenson v. Snare & Triest Co., 160 Fed. 459, 87 C. C. A. 443 609
Swisher v. Railroad Co., 76 Kan. 97, 90 Pac. 812 619
Szymanski v. Blumenthal, 3 Pennewill, 558, 52 Atl. 347 445

Tacoma R. & Power Co. v. Hays, 110 Fed. 496, 49 C. C. A. 115 414
Taylor, In re, 102 Fed. 728, 42 C. C. A. 1 497
Taylor v. Louisville & N. R. Co., 88 Fed. 350, 356, 372, 31 C. C. A. 537, 559 ..... 6, 15
Teal v. Fissell (C. C.) 28 Fed. 351 60
T. E. Hill Co., In re, 148 Fed. 832, 78 C. C. A. 522 649
Texas & P. R. Co. v. Cox, 145 U. S. 593, 605, 12 Sup. Ct. 905, 36 L. Ed. 829 485
Thatcher v. Rockwell, 105 U. S. 467, 26 L. Ed. 949 390
Thayer v. Star Min. Co., 105 Ill. 540 399
Thomas, In re (D. C.) 1 Am. Bankr. Rep. 515, 92 Fed. 912 492
Thomas v. Council Bluffs Canning Co., 92 Fed. 422, 34 C. C. A. 428 ..... 404, 406
Thompson v. Crocker, 9 Pick. (Mass.) 59 237
Thompson v. Fairbanks, 196 U. S. 516, 524, 25 Sup. Ct. 306, 49 L. Ed. 577 ..... 165, 169, 171
Thompson v. Southern Coal Co., 15 N. S. Wales, L. R. 162 620
Thorn v. Turck, 94 N. Y. 90, 46 Am. Rep. 126 58
Tilghman v. Proctor, 125 U. S. 136, 144, 145, 146, 148, 8 Sup. Ct. 894, 31 L. Ed. 664 ..... 634, 636
Tillitt v. Mann, 104 Fed. 421, 424, 43 C. C. A. 617, 619 467

Page
Tisdale v. Insurance Co. of North America, 84 Miss. 709, 36 South. 568..... 404
Tobey v. Barber, 5 Johns. (N. Y.) 68, 72, 4 Am. Dec. 326..... 468
Tonini v. Cevasco, 114 Cal. 266, 46 Pac. 103 338
Tootle v. Clifton, 22 Ohio St. 247, 10 Am. Rep. 732..... 239
Topliff v. Topliff, 145 U. S. 156, 12 Sup. Ct. 825, 36 L. Ed. 658..... 451
Townsend v. Masterson, 15 N. Y. 587..528, 530
Tramway Co. v. Cobb, 164 Fed. 41, 90 C. C. A. 459..... 557
Travelers' Ass'n v. Gilbert, 111 Fed. 269, 49 C. C. A. 309, 55 L. R. A. 538....404, 406
Travis v. Hahn, 119 App. Div. 138, 103 N. Y. Supp. 973..... 129
Tribette v. Illinois Cent. Co., 70 Miss. 182, 12 South. 32, 19 L. R. A. 660, 35 Am. St. Rep. 642.....404, 406
Troeder v. Lorsch, 150 Fed. 710, 80 C. C. A. 376..... 494
Trotta's Adm'r v. Johnson, 28 Ky. Law Rep. 851, 121 Ky. 827, 90 S. W. 540..... 445
Truesdale v. Ward, 24 Mich. 117..... 535
Tucker v. Alexamdroff, 183 U. S. 424, 437, 22 Sup. Ct. 195, 46 L. Ed. 264..... 306
Tucker v. U. S., 151 U. S. 164, 170, 14 Sup. Ct. 299, 38 L. Ed. 112..... 519
Tullis v. Railroad Co., 175 U. S. 348, 20 Sup. Ct. 136, 44 L. Ed. 192..... 126
Turner v. Sawyer, 150 U. S. 578, 587, 14 Sup. Ct. 192, 37 L. Ed. 1189..... 590
Turril v. Railroad Co., 1 Wall. 511, 11 L. Ed. 668..... 191
Twenty Per Cent Cases, 20 Wall. 179, 187, 22 L. Ed. 339..... 393

Uinta Tunnel, etc., Co. v. Ajax Gold Min. Co., 141 Fed. 563, 567, 73 C. C. A. 35 467
Ullman v. Chicago & N. W. R. Co., 112 Wis. 150, 88 N. W. 41, 88 Am. St. Rep. 949 202
Undaunted, The, 1 Lush. 90..... 352
Underwriter, The (D. C.) 119 Fed. 713... 480
Union Pac. R. Co. v. Cheyenne, 113 U. S. 516, 5 Sup. Ct. 601, 28 L. Ed. 1098..... 14
Union Pac. R. Co. v. Metcalf, 50 Neb. 452, 69 N. W. 961..... 202
Union Pac. R. Co. v. Thomas, 152 Fed. 365, 81 C. C. A. 491..... 128
Union Pac. R. Co. v. U. S., 67 Fed. 975, 979, 15 C. C. A. 123, 127..... 420
U. S. v. Britton, 107 U. S. 655, 669, 2 Sup. Ct. 512, 27 L. Ed. 520..... 273
U. S. v. Butler, 1 Hughes, 457, Fed. Cas. No. 14,700..... 177
U. S. v. Chaves, 159 U. S. 452, 464, 16 Sup. Ct. 57, 40 L. Ed. 215; 175 U. S. 509, 523, 20 Sup. Ct. 159, 44 L. Ed. 255 602, 603
U. S. v. Clayton, Fed. Cas. No. 14,814.. 665
U. S. v. Daniel, 47 U. S. 13, 12 L. Ed. 323 424
U. S. v. Davis, Fed. Cas. No. 14,932..... 235
U. S. v. Fairbanks, 96 C. C. A. 229, 171 Fed. 337..... 144
U. S. v. Freeman, Fed. Cas. No. 15,162.. 428
U. S. v. Gale, 109 U. S. 65, 71, 72, 3 Sup. Ct. 1, 5, 6, 27 L. Ed. 857..... 183

Page
U. S. v. Gear, 3 How. 120, 130, 11 L. Ed. 523 143
U. S. v. Germaine, 99 U. S. 508, 510, 25 L. Ed. 482..... 665
U. S. v. Greathouse, 166 U. S. 601, 605, 17 Sup. Ct. 701, 41 L. Ed. 1130..... 143
U. S. v. Hart (D. C.) 78 Fed. 868, 873... 581
U. S. v. Healey, 160 U. S. 136, 146, 16 Sup. Ct. 247, 40 L. Ed. 269..... 143
U. S. v. Homestake Min. Co., 54 C. C. A. 303, 304, 308, 117 Fed. 481, 482, 486... 605
U. S. v. Joint Traffic Ass'n, 171 U. S. 505, 568, 576, 577, 19 Sup. Ct. 25, 43 L. Ed. 259..... 581
U. S. v. Lake (D. C.) 129 Fed. 499..... 665
U. S. v. Long (D. C.) 68 Fed. 348, 349... 665
U. S. v. MacAndrews & Forbes Co. (C. C.) 149 Fed. 831, 832.....585, 586
U. S. v. McKee, Fed. Cas. No. 15,688..... 670
U. S. v. McKenzie (D. C.) 35 Fed. 826, 827, 828..... 581
U. S. v. Martin, 26 Fed. Cas. 1183, 1184. (No. 15,731)..... 581
U. S. v. Mrs. Gue Lim, 176 U. S. 459, 20 Sup. Ct. 415, 44 L. Ed. 544..... 205
U. S. v. New York Cent. & H. R. R. Co. (C. C.) 146 Fed. 298, 301; 164 Fed. 324, 90 C. C. A. 256.....422, 423, 586
U. S. v. Northern Securities Co. (C. C.) 120 Fed. 721, 722..... 581
U. S. v. Northway, 120 U. S. 327, 7 Sup. Ct. 580, 30 L. Ed. 664..... 273
U. S. v. Pomeroy (C. C.) 152 Fed. 279... 422
U. S. v. Post (D. C.) 113 Fed. 852, 853.... 665
U. S. v. Richards (D. C.) 149 Fed. 443, 454 581
U. S. v. Ryan (D. C.) 123 Fed. 634..... 665
U. S. v. Smith (D. C.) 166 Fed. 958, 960.. 665
U. S. v. Trans-Missouri Freight Ass'n, 166 U. S. 290, 330, 339, 340, 17 Sup. Ct. 540, 41 L. Ed. 1007..... 580
U. S. v. Ute Coal & Coke Co., 85 C. C. A. 302, 304, 305, 158 Fed. 20, 22, 23..604, 605
U. S. v. Watkinds (C. C.) 6 Fed. 152..... 428
U. S. v. Wiltberger, 5 Wheat. 77, 96, 5 L. Ed. 37..... 665
U. S. Fidelity & Guaranty Co. v. Board of Com'rs, 145 Fed. 144, 148, 150, 76 C. C. A. 114, 120.....467, 518
U. S. Hotel Co., In re, 134 Fed. 225, 67 C. C. A. 153, 68 L. R. A. 588..... 499
United Shoe Co. v. Duplessis Shoe Co., 155 Fed. 842, 84 C. C. A. 76.....307, 309
United States Bank v. Bank of Washington, 6 Pet. 17, 8 L. Ed. 299..... 389
United States Freehold Land & Emigration Co. v. Gallegos, 89 Fed. 769, 32 C. C. A. 470..... 222
United States Smelting Co. v. Parry, 166 Fed. 407, 92 C. C. A. 159.....598, 599
Upton v. McLaughlin, 105 U. S. 640, 644, 26 L. Ed. 1197..... 566

Vail v. Reynolds, 118 N. Y. 297, 302, 23 N. E. 301..... 488
Veginan v. Morse, 160 Mass. 143, 35 N. E. 451 620
Vernon v. U. S., 146 Fed. 121, 123, 124, 76 C. C. A. 547, 549, 550..... 581
Vestal v. Young, 147 Cal. 715, 82 Pac. 381 239

Page
Victorian, The, 24 Or. 121, 132, 32 Pac. 1040, 1042, 41 Am. St. Rep. 838..... 482
Virginia-Carolina Chemical Co. v. Home Ins. Co., 113 Fed. 1, 51 C. C. A. 21..... 404
Virginia & S. W. R. Co. v. Hawk, 160 Fed. 348, 87 C. C. A. 300..... 563
Von Baur v. U. S. (C. C.) 141 Fed. 439... 44
Von Hartz, In re, 142 Fed. 726, 74 C. C. A. 58.....53, 54

Wabash R. Co. v. Sharpe, 76 Neb. 424, 107 N. W. 758, 124 Am. St. Rep. 823... 202
Wadsworth Board of Works v. United Tel. Co., 13 Q. B. D. 914..... 260
Wales v. Waterbury Mfg. Co., 101 Fed. 126, 130, 41 C. C. A. 250, 253, 254..... 638
Walsh v. Dwight, 40 App. Div. 513, 58 N. Y. Supp. 91, 93..... 580
Walsh v. Hill, 38 Cal. 481, 486, 487..... 467
Walworth v. Harris, 129 U. S. 355, 9 Sup. Ct. 340, 32 L. Ed. 712..... 484
Ward v. Matthews, 73 Cal. 13, 14 Pac. 604 381
Ward v. Willson, 3 Mich. 1..... 480
Warren v. Keep, 155 U. S. 265, 15 Sup. Ct. 83, 39 L. Ed. 144..... 635
Washburn v. Van Steenwyk, 32 Minn. 336, 20 N. W. 324..... 543
Water Meter Co. v. Desper, 101 U. S. 332, 25 L. Ed. 1024..... 624
Waxelbaum, The (D. C.) 101 Fed. 228.. 492
Weeber v. U. S. (C. C.) 62 Fed. 740, 741 665
Wehrman v. Conklin, 155 U. S. 314, 15 Sup. Ct. 129, 39 L. Ed. 167..... 589
Weidenfeld v. Northern Pacific, 129 Fed. 305, 63 C. C. A. 537.....554, 555
Wells v. Curtis, 66 Fed. 318, 13 C. C. A. 494 104
Western Electric Co. v. Home Tel. Co. (C. C.) 85 Fed. 649..... 450
Western Inv. Co. v. McFarland, 166 Fed. 76, 91 C. C. A. 504.....598, 600
Western R. Co. v. Harwell, 91 Ala. 340, 8 South. 649..... 202
Western Union Tel. Co. v. Visalia, 149 Cal. 744, 87 Pac. 1023..... 259
Western & A. R. Co. v. Ferguson, 113 Ga. 708, 39 S. E. 306, 54 L. R. A. 802.. 514
Western & A. R. Co. v. Roberson, 61 Fed. 592, 603, 9 C. C. A. 646..... 563
Westervelt v. Mohrenstecher, 76 Fed. 118, 121, 22 C. C. A. 93, 95, 34 L. R. A. 477 467
Westinghouse Electric & Mfg. Co. v. American Transformer Co. (C. C.) 121 Fed. 560; 130 Fed. 550.....623, 624, 627
Westinghouse Electric & Mfg. Co. v. Union Carbide Co. (C. C.) 112 Fed. 417; 117 Fed. 495, 55 C. C. A. 230.....623, 627, 631
Westinghouse Electric & Mfg. Co. v. Wagner Electric Mfg. Co., 129 Fed. 604 627
Wheeler v. Floral M. M. & Co., 10 Nev. 200 530
Whipple v. Fair Haven, 63 Vt. 221, 21 Atl. 533..... 225
White v. Nicholls, 3 How. 266, 287, 11 L. Ed. 591..... 340
White v. Platt, 5 Denio (N. Y.) 269..... 167

Page
White Mountain Paper Co. v. Morse & Co., 127 Fed. 643, 62 C. C. A. 369..... 649
Whitney v. Wenman, 198 U. S. 539, 25 Sup. Ct. 778, 49 L. Ed. 1157..... 540
Whittier v. Dana, 10 Allen (Mass.) 326.. 381
Whitwell v. Continental Tobacco Co., 125 Fed. 454, 458, 460, 461, 463, 60 C. C. A. 290, 294, 296, 297, 299, 64 L. R. A. 689 457, 580, 581
Wight v. U. S., 167 U. S. 513, 17 Sup. Ct. 822, 42 L. Ed. 258..... 386
Williams, In re (D. C.) 120 Fed. 38; 123 Fed. 321.....53, 54
Williams v. Donell, 2 Head, 695, 697..... 603
Williams v. Neely, 134 Fed. 1, 10, 67 C. C. A. 171, 180, 69 L. R. A. 232..... 15
Wilmington Transp. Co. v. Old Kensington (D. C.) 33 Fed. 496, 500..... 352
Wilson, Ex parte, 114 U. S. 426, 5 Sup. Ct. 935, 29 L. Ed. 89..... 174
Wilson v. Cox, 49 Miss. 538..... 543
Winans v. Denmead, 15 How. 330, 342, 14 L. Ed. 717.....630, 632
Winnebago, The, 141 Fed. 945, 73 C. C. A. 295; 205 U. S. 354, 27 Sup. Ct. 509, 51 L. Ed. 836, 142 Mich. 84, 105 N. W. 527, 113 Am. St. Rep. 566..... 482
Winslow v. Jenness, 64 Mich. 84, 30 N. W. 905..... 404
Winslow v. Nayson, 113 Mass. 411, 421... 224
Wisconsin Tel. Co. v. Oshkosh, 62 Wis. 32, 21 N. W. 828..... 260
Witt v. Railroad Co., 38 Minn. 122, 127, 35 N. W. 862..... 467
Wood v. Brady, 150 U. S. 18, 14 Sup. Ct. 6, 37 L. Ed. 981..... 262
Wood v. McClelland (Tex. Civ. App.) 53 S. W. 381..... 669
Wood v. United States Fidelity Co. (D. C.) 143 Fed. 424.....164, 170
Wood & Henderson, In re, 210 U. S. 246, 28 Sup. Ct. 621, 52 L. Ed. 1046.....53, 540
Woodbury v. Marblehead Water Co., 145 Mass. 509, 15 N. E. 282..... 224
Worcester County, In re, 102 Fed. 808, 814, 42 C. C. A. 637, 643..... 468
Wright v. The Railway, L. R. 10 Q. B. 298; 1 Q. B. 252 (1876)..... 461
Wright v. Woodgate, 2 Cromp. M. & R. 573 340

Yates v. Joyce, 11 Johns. (N. Y.) 136... 316
Yesbera v. Hardesty Mfg. Co., 92 C. C. A. 46, 166 Fed. 120, 125..... 636
Youngblood v. Sexton, 32 Mich. 406, 20 Am. Rep. 654..... 404
Young v. Lion Hardware Co., 55 Ohio St. 423, 45 N. E. 313..... 524

Zane v. Peck (C. C.) 13 Fed. 475..... 635
Zartman v. First Nat. Bank, 189 N. Y. 273, 82 N. E. 127, 12 L. R. A. (N. S.) 1063 171
Zeiger v. Pennsylvania R. Co. (C. C.) 151 Fed. 348; 158 Fed. 809, 86 C. C. A. 69 445
Zwack & Co., Ex parte, 76 O. G. 1855..... 307

CASES PASSED UPON.

CASES IN THE UNITED STATES CIRCUIT COURTS OF APPEALS WHICH HAVE BEEN PASSED UPON BY THE SUPREME COURT OF THE UNITED STATES.

Ashburn v. Graves.....79 C. C. A. 478

Writ of Certiorari. Decree reversed, December 20, 1909, 30 Sup. Ct. 108, 215 U. S. 331, 54 L. Ed. —.

Baltimore & O. R. Co. v. United States.....91 C. C. A. 147

Writ of Error. Judgment reversed, January 10, 1910, 30 Sup. Ct. 164, 215 U. S. 481, 54 L. Ed. —.

Graves v. Crawford.....79 C. C. A. 478

Writ of Certiorari. Decree reversed, December 20, 1909, 30 Sup. Ct. 108, 215 U. S. 331, 54 L. Ed. —.

Mankin v. United States.....86 C. C. A. 672

Writ of Error. Judgment affirmed, January 17, 1910, 30 Sup. Ct. 175, 215 U. S. 533, 54 L. Ed. —.

Old Nick Williams Co. v. United States.....82 C. C. A. 73

Writ of Certiorari. Judgment affirmed, January, 24, 1910, 30 Sup. Ct. 221, 215 U. S. 541, 54 L. Ed. —.

United States v. Baltimore & O. R. Co.....91 C. C. A. 147

Writ of Error. Judgment reversed, January 10, 1910, 30 Sup. Ct. 164, 215 U. S. 481, 54 L. Ed. —.

CASES ON REHEARING.

CASES IN THE UNITED STATES CIRCUIT COURTS OF APPEALS IN WHICH REHEARINGS HAVE BEEN GRANTED OR DENIED.

Atchison, T. & S. F. R. Co. v. United States.....95 C. C. A. 446
Rehearing denied, Oct. 4, 1909.
Axman v. United States.....93 C. C. A. 322
Rehearing denied, Mch. 1, 1909.
Erkel v. United States.....95 C. C. A. 151
Rehearing denied, Oct. 4, 1909.
Price v. United States.....95 C. C. A. 257
Rehearing denied, Oct. 4, 1909.
Richmond Coal Co. v. Commercial Union Assur. Co.....95 C. C. A. 178
Rehearing denied, Oct. 4, 1909.
Robnett v. United States.....95 C. C. A. 244
Rehearing denied, Oct. 4, 1909.
Schurmeier v. Connecticut Mut. Life Ins. Co.....96 C. C. A. 107
Rehearing denied, Oct. 15, 1909.
Southern Pac. R. Co. v. United States.....96 C. C. A. 252, 256
Rehearing denied, Oct. 4, 1909.
Stenfjeld v. Espe.....96 C. C. A. 497
Rehearing denied, Oct. 4, 1909.

INDEX TO NOTES.

VOLUMES 1-97.

ABANDONMENT.
Of trade-marks and trade-names. 33 C. C. A. 294.
Of railroad right of way. 42 C. C. A. 576.
Of water rights. 45 C. C. A. 190.
Of copyright. 69 C. C. A. 563.
Of invention. 70 C. C. A. 6.

ABATEMENT AND REVIVAL.
Pendency of action in state or federal court as ground for abatement of action in the other. 47 C. C. A. 205; 73 C. C. A. 521.
Abatement or continuance of action or proceeding on death of one of two or more plaintiffs. 89 C. C. A. 413.

ACCIDENT INSURANCE.
Risks and causes of loss. 38 C. C. A. 3; 85 C. C. A. 126.

ACCOUNT.
Right to accounting as to property or funds acquired by wrongful acts or conduct. 96 C. C. A. 92.

ACTIONS.
Jurisdiction of federal courts as restricted by state laws. 1 C. C. A. 514.
On insurance policy—Time of bringing suit. 2 C. C. A. 473; 35 C. C. A. 404.
Forms of action in federal courts—Following state practice. 5 C. C. A. 598.
Limitation of actions against corporate officers. 53 C. C. A. 7.
By and against receivers and "agents" of national banks. 53 C. C. A. 398.
Bar of action as determined by limitations of state other than that in which action is brought. 58 C. C. A. 186.
Satisfaction of one or more judgments for same cause of action. 67 C. C. A. 322.
Premature commencement of actions. 76 C. C. A. 159.
Illegal or immoral transaction as ground of action. 93 C. C. A. 528.

ADMIRALTY.
Nature of hearing on appeal—Admission of new proof. 3 C. C. A. 322.
Demurrage. 14 C. C. A. 657; 21 C. C. A. 337; 46 C. C. A. 4.

ADMIRALTY—Cont'd.
Extinguishment of maritime liens. 17 C. C. A. 102.
Jurisdiction as to matters of contract. 18 C. C. A. 347; 27 C. C. A. 530.
General average. 20 C. C. A. 357.
Jurisdiction to enforce liens under state laws. 21 C. C. A. 21.
Collision rules. 28 C. C. A. 532; 29 C. C. A. 368.
Salvage awards. 30 C. C. A. 280.
Signals of meeting vessels. 30 C. C. A. 630.
Negligence of both master and servant—Division of damages. 30 C. C. A. 678.
Jurisdiction of suits between foreigners. 37 C. C. A. 193.
Limitation of shipowner's liability. 45 C. C. A. 387.
Statutory exemptions of shipowners from liability. 49 C. C. A. 11.
Demise of vessel. 55 C. C. A. 225.
Collision—Overtaking vessels. 60 C. C. A. 254.
Jurisdiction of torts. 62 C. C. A. 279.
Liability of vessel for injuries caused by creation of swell. 78 C. C. A. 3.
Grounds for forfeiture of salvage. 90 C. C. A. 226.
Right to compensation as between different sets of salvors or successive salvors. 96 C. C. A. 5.
Delivery of cargo to vessel affecting liability for loss or injuries. 96 C. C. A. 390.

ADVERSE POSSESSION.
Tax deed as color of title. 24 C. C. A. 402.
Acquisition or loss of right to railroad right of way by prescription. 63 C. C. A. 7.

ALIENS.
Citizenship under state and federal laws. 6 C. C. A. 37.
Citizenship of the Chinese. 1 C. C. A. 212; 35 C. C. A. 332.
Citizenship of married women. 65 C. C. A. 5.
Importation of contract labor. 66 C. C. A. 133.
Nonresident aliens as beneficiaries under death acts. 91 C. C. A. 396.

ALTERATION OF INSTRUMENTS.
Discharge of surety by. 66 C. C. A. 6.

APPEAL.
In admiralty—New proofs. 3 C. C. A. 322.
Review of previous decisions as to validity of patents in circuit court of appeals. 3 C. C. A. 565; 27 C. C. A. 427; 32 C. C. A. 484.
Review of interlocutory decree granting or refusing injunction in patent case in circuit court of appeals. 3 C. C. A. 572; 27 C. C. A. 189; 32 C. C. A. 484.
When may be aided by mandamus. 10 C. C. A. 450.
Following state practice. 27 C. C. A. 394.
Finality of judgments and decrees for purposes of review. 2 C. C. A. 379; 17 C. C. A. 238; 28 C. C. A. 482.
Appeal and review in bankruptcy cases. 43 C. C. A. 9.
Appeal or mandamus. 47 C. C. A. 376.
Reduction or increase of amount of recovery on appeal. 48 C. C. A. 470.
Additional proofs in appellate court without trial de novo. 67 C. C. A. 600.
Jurisdiction of lower court to rehear cause or grant new trial after remand by appellate court. 70 C. C. A. 416.
Enforcement of decree of appellate court by mandamus. 77 C. C. A. 409.
Amendment of writ of error, citation, or notice of proceedings for review. 77 C. C. A. 490.
When summons and severance of parties on appeal or writ of error is authorized or required. 93 C. C. A. 608.

APPEARANCE.
Following state practice. 5 C. C. A. 594.

ARBITRATION AND AWARD.
Arbitration as a condition of an insurance policy. 9 C. C. A. 628; 39 C. C. A. 389.
Setting aside an award for interest, prejudice, or misconduct of arbitrator. 12 C. C. A. 592.
Authority of arbitrators after final award and power to amend, modify, or make new or supplemental award. 85 C. C. A. 506.
Revocation or setting aside agreement to submit to arbitration. 93 C. C. A. 171.

ARGUMENTS.
Of counsel upon failure to produce witness. 13 C. C. A. 589.

ASSAULT AND BATTERY.
Mental suffering as element of damages. 11 C. C. A. 561.
Liability of corporations. 39 C. C. A. 14.

ASSIGNEES.
Citizenship as affecting the jurisdiction of the federal courts. 10 C. C. A. 254; 27 C. C. A. 302.

ASSIGNMENTS.
Of right to use name as trade-mark. 17 C. C. A. 579; 27 C. C. A. 360.
Of claims against the United States and government contracts. 22 C. C. A. 650.
Liability of transferrors and transferees of corporate stock for assessments. 61 C. C. A. 322.
Of licenses for use or sale of patents. 64 C. C. A. 596.
Subrogation of insurer under assignment of rights of insured. 65 C. C. A. 615.
Bank check as equitable assignment of deposit. 91 C. C. A. 468.

ASSIGNMENTS FOR BENEFIT OF CREDITORS.
Power of corporation to make. 24 C. C. A. 221.
Effect of national bankruptcy act on state insolvency laws and on assignments for benefit of creditors. 51 C. C. A. 11.

ASSOCIATIONS.
Who may be parties in actions by or against associations. 82 C. C. A. 270.

ASSUMPTION OF RISK.
Assumption of risk incident to employment. 38 C. C. A. 314.

ATTACHMENT.
Issuance—Following state practice. 5 C. C. A. 606; 27 C. C. A. 393.

ATTORNEY AND CLIENT.
Arguments of counsel. 13 C. C. A. 589.
Bonds, securities, and other papers subject to lien for services. 32 C. C. A. 229.
Liability of attorneys for contempt. 48 C. C. A. 7.
Comments of counsel and instructions on failure of accused to testify. 54 C. C. A. 373.
Authority of attorney after judgment. 67 C. C. A. 130.
Compensation of attorney on premature termination of employment. 69 C. C. A. 113.
Expert testimony as to value of services. 74 C. C. A. 257.
Pleading or charge in disbarment proceedings. 96 C. C. A. 481.

AWARD.
Setting aside for interest, prejudice, or misconduct of arbitrator. 12 C. C. A. 592.

BAGGAGE.
Responsibility of sleeping-car companies for baggage and valuables. 10 C. C. A. 338.

BAGGAGE—Cont'd.
Limitation of liability by carrier for passenger's baggage. 32 C. C. A. 308.

BANKRUPTCY.
Jurisdiction of federal courts in suits relating to bankruptcy. 11 C. C. A. 313.
What persons are subject to bankruptcy law. 42 C. C. A. 4.
Appeal and review in bankruptcy cases. 43 C. C. A. 9.
Franchises and licenses as assets in bankruptcy. 43 C. C. A. 389.
Effect of national bankruptcy act on state insolvency laws and on assignments for benefit of creditors. 51 C. C. A. 11.

BANKS AND BANKING.
Jurisdiction of federal courts in suits against national banks. 11 C. C. A. 315.
Who liable as shareholders in national banks. 15 C. C. A. 130; 46 C. C. A. 503.
Personal liability of directors. 12 C. C. A. 680; 33 C. C. A. 230.
Deposits in bank after insolvency. 43 C. C. A. 588.
Enforcement of statutory liability of stockholders in national banks. 52 C. C. A. 6.
Actions by and against receivers and "agents" of national banks. 53 C. C. A. 398.
Lien of banks on stock. 56 C. C. A. 179.
Taxation of bank deposits. 60 C. C. A. 413.
Right to proceeds of collection on insolvency of collecting bank. 69 C. C. A. 333.
Knowledge or notice acquired by officer or agent of bank in private business or outside scope of duties as affecting its liability. 84 C. C. A. 139.
Nature of bank's liability on certification of check. 90 C. C. A. 342.
Bank check as equitable assignment of deposit. 91 C. C. A. 468.

BILLS AND NOTES.
Conditions and collateral agreements on execution or transfer of bills or notes as affecting bona fide purchasers. 95 C. C. A. 207.

BILLS OF LADING.
Perils of the sea. 19 C. C. A. 465.

BOARDS OF TRADE.
Quotations of prices and transactions on exchanges. 61 C. C. A. 2.

BONDS.
Bona fide purchasers of municipal bonds. 41 C. C. A. 6.
Death of surety. 49 C. C. A. 591.

BONDS—Cont'd.
Rights and remedies of holders of invalid municipal securities. 66 C. C. A. 235.

BREACH OF MARRIAGE PROMISE.
Effect of existing marriage on subsequent contract to marry. 50 C. C. A. 583.

BROKERS.
Right to compensation from both parties. 84 C. C. A. 7.

BUILDING AND LOAN ASSOCIATIONS.
Statutory exemptions from operation of usury laws. 36 C. C. A. 343.
What law governs usury. 51 C. C. A. 319.

CANCELLATION.
Of patent to public land. 22 C. C. A. 38.
Of certificates of corporate stock. 55 C. C. A. 167.
Cancellation, surrender, or rescission of charter of vessel. 61 C. C. A. 569.

CARRIERS.
Duty to protect passengers from dangerous fellow passengers. 4 C. C. A. 231.
Right to restrain or expel disorderly passenger. 4 C. C. A. 231.
Duties and liabilities of sleeping-car companies. 10 C. C. A. 335; 34 C. C. A. 386; 89 C. C. A. 10.
Liability for injuries caused by negligence or torts of servants. 10 C. C. A. 466; 27 C. C. A. 651.
Duty to stop trains at station. 14 C. C. A. 362.
Quick dispatch—Demurrage. 14 C. C. A. 657; 21 C. C. A. 342.
Contracts other than for carriage. 20 C. C. A. 521.
Who are common carriers of goods. 20 C. C. A. 521.
Liability as warehousemen. 20 C. C. A. 529.
Duty to trespasser on train. 31 C. C. A. 76.
Liabilities to employés of others carried under contract with carrier. 31 C. C. A. 164.
Persons assisting passengers. 31 C. C. A. 164.
Rights of licensee on train. 31 C. C. A. 164.
Rights of person traveling on pass. 31 C. C. A. 164; 32 C. C. A. 306.
Burden of proof of negligence where passengers have been injured. 32 C. C. A. 23.
Live stock—Evidence admissible in actions for injuries through negligence or accident. 32 C. C. A. 148.
Limitations of liability for personal injuries to passengers and for baggage. 32 C. C. A. 301.

CARRIERS—Cont'd.
Continuance of passenger relation. 40 C. C. A. 437.
Liability of railroads or street car companies for ejection of trespassers. 51 C. C. A. 578.
Injuries to railroad passengers while occupying positions other than regular seats. 54 C. C. A. 4.
Use of carriers' premises by hack and cab drivers, hotel runners, etc. 57 C. C. A. 367.
Regulations of charges by carrier for long and short hauls. 60 C. C. A. 542.
Duties and liabilities of carriers as to furnishing facilities for transportation. 61 C. C. A. 414.
Negligence in ejection of persons under disability. 62 C. C. A. 422.
Liabilities of connecting carriers for injuries to passengers. 64 C. C. A. 485.
Relation of carrier to persons carried under contract with their employers. 67 C. C. A. 427.
Liabilities to employés of others carried under contract with carrier. 85 C. C. A. 5.
What constitutes an unlawful preference or discrimination by a carrier under interstate commerce regulations. 94 C. C. A. 230.
Delegation of legislative power to railroad commissions. 95 C. C. A. 132.

CERTIFICATES.
Of receivers. 26 C. C. A. 350; 94 C. C. A. 601.
Of corporate stock—Cancellation. 55 C. C. A. 167.

CERTIORARI.
From supreme court. 1 C. C. A. 5.

CHARITIES.
Liabilities of charitable institutions for negligence. 47 C. C. A. 134.

CHARTER.
Implied warranty of seaworthiness. 15 C. C. A. 388; 60 C. C. A. 179.
Cancellation, surrender, or rescission of charter of vessel. 61 C. C. A. 569.

CHATTEL MORTGAGES.
Controlling effect of state decisions in United States courts. 11 C. C. A. 88.

CHILD.
Death of parent by wrongful act—Damages. 1 C. C. A. 34.
Imputed negligence. 34 C. C. A. 4.
Age as affecting contributory negligence. 37 C. C. A. 362.

CHINESE.
Citizenship. 1 C. C. A. 212; 35 C. C. A. 332.

CIRCUIT COURTS.
Review of jurisdiction of circuit courts. 48 C. C. A. 351.
Jurisdiction of, as determined by the amount in controversy. 19 C. C. A. 75; 36 C. C. A. 459.

CIRCUIT COURTS OF APPEALS.
Certiorari from supreme court. 1 C. C. A. 5.
Jurisdiction. 1 C. C. A. 6; 32 C. C. A. 475.
Effect of previous decisions as to validity of patents. 3 C. C. A. 565; 27 C. C. A. 427; 32 C. C. A. 484.
Review of interlocutory decrees in patent cases. 3 C. C. A. 572; 27 C. C. A. 189; 32 C. C. A. 484.
Orders, decrees, and judgments reviewable. 13 C. C. A. 374; 90 C. C. A. 566.
Enjoining proceedings in state courts. 16 C. C. A. 90; 27 C. C. A. 575; 63 C. C. A. 437.
Conflicts of jurisdiction between federal and state courts. 22 C. C. A. 356; 26 C. C. A. 49.
Jurisdiction on habeas corpus. 25 C. C. A. 11.
Review of jurisdiction of circuit courts. 48 C. C. A. 351.

CITIZENSHIP.
Of Chinese. 1 C. C. A. 212; 35 C. C. A. 332.
Of aliens under state and federal laws. 6 C. C. A. 37.
Of corporations. 6 C. C. A. 174; 10 C. C. A. 249; 27 C. C. A. 301.
Diverse citizenship as a ground of federal jurisdiction. 10 C. C. A. 249; 27 C. C. A. 298.
Of married women. 65 C. C. A. 5.

COLLISION.
As a peril of the sea. 19 C. C. A. 468.
Collision rules—Speed of steamers in fog. 28 C. C. A. 532.
Collision rules—Speed of sailing vessels in fog. 29 C. C. A. 368.
Signals of meeting vessels. 30 C. C. A. 630.
Overtaking vessels. 60 C. C. A. 254.

COLOR OF TITLE.
Tax deed as color of title. 24 C. C. A. 402.

COMMERCE.
Taxation of interstate commerce by state. 8 C. C. A. 492.
Jurisdiction of federal courts of suits under interstate commerce act. 11 C. C. A. 318.
State laws interfering with interstate or foreign commerce—Exclusion, regulation, and taxation of foreign corporations. 24 C. C. A. 13.
Inspection, quarantine, and sanitary regulations interfering with interstate commerce. 59 C. C. A. 191.

COMMERCE—Cont'd.
What constitutes an unlawful preference or discrimination by a carrier under interstate commerce regulations. 94 C. C. A. 230.

CONSPIRACY.
Liabilities of corporations. 39 C. C. A. 17.
Admissibility, on trial of joint indictments, of acts and declarations of conspirators and codefendants after accomplishment of object. 74 C. C. A. 472.
Judgment against one defendant sued jointly for conspiracy. 80 C. C. A. 245.
Merger of conspiracy in offense committed. 96 C. C. A. 311.

CONSTITUTIONAL LAW.
Due process of law in revenue proceedings. 8 C. C. A. 398.
Regulation of commerce by taxation. 8 C. C. A. 492.
Restrictions on grants. 14 C. C. A. 6.
Limitations of taxing power. 23 C. C. A. 515.
Interference with interstate or foreign commerce. 24 C. C. A. 13.
Constitutional limitations of municipal indebtedness. 36 C. C. A. 6.
Trial by jury in criminal prosecutions. 39 C. C. A. 275.
Impairing obligation of contract for exemption from taxation. 70 C. C. A. 294.
Imposition of penalty, extra allowance of damages, costs, or fees as denial of equal protection of law. 72 C. C. A. 547.
Validity of laws alleged to impair charter or franchise of corporation as dependent on reservation of power to alter or amend. 77 C. C. A. 281.
Statutory change of remedy as impairing obligation of contracts. 93 C. C. A. 281.
Delegation of legislative power to railroad commissions. 95 C. C. A. 132.

CONTEMPT.
Liability of attorneys. 48 C. C. A. 7.

CONTRACT LABOR.
Importation. 66 C. C. A. 133.

CONTRACTS.
Implied obligation to pay for benefits received. 2 C. C. A. 488.
Monopolistic contracts—Validity as affected by public policy. 9 C. C. A. 666; 34 C. C. A. 486.
Jurisdiction of federal courts as to laws impairing obligation of contract. 11 C. C. A. 316.
Relating to use of trade-name. 14 C. C. A. 104.
Mutuality in. 15 C. C. A. 543.
Intent as an element in offer and acceptance. 16 C. C. A. 199.
Admiralty jurisdiction over. 18 C. C. A. 347; 27 C. C. A. 530.

CONTRACTS—Cont'd.
Of common carriers other than for carriage. 20 C. C. A. 521.
Restraining competition in bidding for public works at judicial sales, etc. 28 C. C. A. 192.
For lobby services. 29 C. C. A. 446.
Breach of executory contract—Accrual of right to sue. 30 C. C. A. 210.
Divisibility of contracts. 30 C. C. A. 467.
Of persons non compos mentis under guardianship. 34 C. C. A. 264.
Marketable title. 40 C. C. A. 592.
Sufficiency of expression of consideration in memorandum within statute of frauds. 46 C. C. A. 183.
Persons entitled to enforce specific performance. 47 C. C. A. 493.
Enforcement of contracts requiring performance of continuous acts. 49 C. C. A. 103.
Discharge of surety on building contract by change in obligation or duty of principal. 52 C. C. A. 427.
Marriage by mutual agreement. 52 C. C. A. 581.
Restraining breach of contract of employé not to engage in competing business. 53 C. C. A. 492.
Validity of contracts with public officers as affected by legality of object or consideration. 56 C. C. A. 10.
For sale of things to be produced or manufactured. 58 C. C. A. 363.
Merger of contracts. 60 C. C. A. 6.
Relating to liability of master for negligence causing injury to or death of servant. 62 C. C. A. 5.
Enforcement of contracts of which time is the essence. 63 C. C. A. 562.
Relation of carrier to persons carried under contract with their employers. 67 C. C. A. 427.
Impairing obligation of contract for exemption from taxation. 70 C. C. A. 294.
Practical construction of contracts by parties. 73 C. C. A. 392.
Validity of laws alleged to impair charter or franchise of corporation as dependent on reservation of power to alter or amend. 77 C. C. A. 281.
Rights and liabilities of parties contracting with trusts or combinations in restraint of trade. 78 C. C. A. 612.
Remote or speculative profits as element of damages for breach of contract. 81 C. C. A. 546.
Misrepresentation and concealment by vendee of goods as to financial condition as affecting contract of sale. 87 C. C. A. 126.
Validity of conditions in contracts of conditional sale of personalty. 87 C. C. A. 538.
Construction of contracts as to written and printed provisions. 92 C. C. A. 394.

CONTRACTS—Cont'd.
Reformation of instruments as dependent on mutuality of mistake. 93 C. C. A. 10.
Revocation or setting aside agreement to submit to arbitration. 93 C. C. A. 171.
Statutory change of remedy as impairing obligation of contracts. 93 C. C. A. 281.

CONTRIBUTION.
On marine loss—General average. 20 C. C. A. 357.

COPYRIGHTS.
Laches as a defense in suits for infringement. 22 C. C. A. 211; 36 C. C. A. 613.
Matter subject to copyright. 58 C. C. A. 273.
Dedication to public or abandonment of copyright. 69 C. C. A. 563.
Infringement by use of extracts and quotations. 76 C. C. A. 475.
Rights of authors to control of publication, disposition or use of their productions independent of statutory copyright. 77 C. C. A. 620.

CORPORATIONS. See Banks and Banking.
Citizenship for purposes of federal jurisdiction. 6 C. C. A. 174; 10 C. C. A. 249; 27 C. C. A. 298.
Status of foreign corporations. 7 C. C. A. 419.
Dissolution of foreign corporation. 7 C. C. A. 421.
Jurisdiction of federal courts in suits against federal corporations. 11 C. C. A. 314.
Personal liability of directors for negligence. 12 C. C. A. 680; 33 C. C. A. 230.
The power of officers and directors in their individual capacity to deal with corporation. 13 C. C. A. 466.
Use of corporate name as trade-name. 17 C. C. A. 579; 27 C. C. A. 357.
Stockholders' liability to creditors in equity. 23 C. C. A. 315; 33 C. C. A. 23.
Exclusion, regulation, and taxation of foreign corporations. 24 C. C. A. 13.
Power to assign for benefit of creditors. 24 C. C. A. 221.
Foreign corporations "doing business" in state. 33 C. C. A. 585; 72 C. C. A. 622.
Liability for torts. 39 C. C. A. 9.
Rights and liabilities of pledgees of stock. 42 C. C. A. 135.
Service of process on foreign corporations. 45 C. C. A. 3; 78 C. C. A. 473.
Acts of corporators and promoters. 46 C. C. A. 576; 92 C. C. A. 450.
Power to form partnership. 50 C. C. A. 131.

CORPORATIONS—Cont'd.
Effect of judgment against corporation in action to enforce stockholder's liability. 52 C. C. A. 305.
Limitation of actions against corporate officers. 53 C. C. A. 7.
Cancellation of certificates of corporate stock. 55 C. C. A. 167.
Liability of transferrors and transferees of corporate stock for assessments. 61 C. C. A. 322.
Liabilities enforceable against reorganized corporations. 62 C. C. A. 147.
Acquisition by corporation of stock of other corporation. 68 C. C. A. 120.
Evidence of membership in corporation. 72 C. C. A. 423.
Liabilities of corporate officers for debts and acts of corporation as dependent on knowledge or participation. 75 C. C. A. 492.
Powers of committees of directors or trustees of corporations. 76 C. C. A. 7.
Validity of laws alleged to impair charter or franchise of corporation as dependent on reservation of power to alter or amend. 77 C. C. A. 281.
Liability of corporation succeeding to partnership for debts of firm. 80 C. C. A. 560.
Rights and liabilities of stockholders of railroads on consolidation. 81 C. C. A. 480.
Rights of stockholders to sue or defend on behalf of corporation as dependent on refusal of corporation or officers to act. 87 C. C. A. 390.
Compliance with charter, constitutional or statutory requirements as to increase of capital stock. 88 C. C. A. 369.
Rights of minority stockholders as to management of corporate affairs. 89 C. C. A. 482.

COSTS.
Right to costs in equity. 17 C. C. A. 368.
Imposition of extra allowance of costs, or fees as denial of equal protection of law. 72 C. C. A. 547.

COUNTERFEITING.
Nonmailable matter. 30 C. C. A. 86.

COURTS. See Federal Courts.
Dicta. 64 C. C. A. 361.
Decisions of courts as authority in other co-ordinate courts. 97 C. C. A. 472.

CREDIT.
Loss of as element of damages. 62 C. C. A. 612.

CREDIT INSURANCE. 19 C. C. A. 271; 34 C. C. A. 165.

CRIMINAL LAW. See Rewards.
Province of court and jury in criminal prosecutions. 26 C. C. A. 541.

CRIMINAL LAW—Cont'd.
Trial by jury in criminal prosecutions. 39 C. C. A. 275.
Prosecution and punishment of accessories. 44 C. C. A. 326.
Power of court to revise sentence. 46 C. C. A. 412.
Restraining criminal proceedings. 51 C. C. A. 133.
Proof of corpus delicti to corroborate a confession. 53 C. C. A. 278.
Comments of counsel and instructions on failure of accused to testify. 54 C. C. A. 373.
Preliminaries to introduction of secondary evidence in criminal prosecutions. 61 C. C. A. 117.
Discontinuance, nolle prosequi, or dismissal as bar to subsequent prosecution. 68 C. C. A. 4.
Consolidation of and trial of indictments together. 69 C. C. A. 287.
Review, by trial court, of evidence given before grand jury. 69 C. C. A. 488.
Circumstantial evidence of corpus delicti. 70 C. C. A. 156.
Admission on joint trial, of evidence competent only against one or part of defendants. 73 C. C. A. 295.
Admissibility, on trial of joint indictments, of acts and declarations of conspirators and codefendants after accomplishment of object. 74 C. C. A. 472.
Effect of acquittal in criminal prosecution on liability in tort for alleged criminal act. 79 C. C. A. 407.
Right of accused to be confronted by witnesses. 80 C. C. A. 116.
Computation of cumulative sentences. 81 C. C. A. 196.
Admissibility of written instruments in criminal prosecutions as dependent on preliminary proof. 82 C. C. A. 8.
Commencement of period of limitations against prosecutions for continuing offenses. 84 C. C. A. 519.
Identity of offenses charged in requisition for extradition and indictment, and immunity from prosecution for other offense. 85 C. C. A. 275.
Waiver of objections to instructions in criminal prosecutions. 88 C. C. A. 302.
Admissibility against accused of evidence wrongfully obtained, irrespective of question of compelling accused to criminate himself. 91 C. C. A. 2.
Right to waive trial by jury in criminal prosecutions. 94 C. C. A. 7.
Merger of conspiracy in offense committed. 96 C. C. A. 311.

CUSTOMS AND USAGES.
Presumptions. 56 C. C. A. 394.
Existence of custom or usage as question for jury. 83 C. C. A. 9.

CUSTOMS DUTIES.
Interpretation of commercial and trade terms in tariff laws. 18 C. C. A. 545.

DAMAGES.
Mental suffering as an element of damage in general. 11 C. C. A. 556.
For mental suffering for delay in delivery of telegram. 11 C. C. A. 571; 15 C. C. A. 250; 28 C. C. A. 62.
Delay in transmission of telegraphic message. 14 C. C. A. 177.
Measure of, in actions against telegraph companies. 15 C. C. A. 235; 28 C. C. A. 59.
In condemnation proceedings. 16 C. C. A. 468.
For personal injuries as affected by plaintiff's character and condition. 27 C. C. A. 138.
Negligence of both master and servant —Division of damages in admiralty. 30 C. C. A. 678.
Liability of corporations for exemplary or punitive damages. 39 C. C. A. 18.
Punitive damages for death by wrongful act. 44 C. C. A. 259.
Reduction or increase of amount of recovery on appeal. 48 C. C. A. 470.
Persons entitled to damages for wrongful enforcement of tax. 54 C. C. A. 550.
Aggravation of disease or injury due to existing disease, predisposition, or physical condition. 54 C. C. A. 645.
Loss of credit as element of damages. 62 C. C. A. 612.
Mitigation of damages for wrongful discharge from employment by failure of servant to seek or accept other employment. 64 C. C. A. 5.
Retraction, apology, or reparation as ground for mitigation of damages for libel and slander. 71 C. C. A. 315.
Imposition of penalty, extra allowance of damages, costs or fees as denial of equal protection of law. 72 C. C. A. 547.
Remote or speculative profits as element of damages for breach of contract. 81 C. C. A. 546.
Right to require plaintiff in action for personal injuries to submit to physical examination. 93 C. C. A. 435.

DEATH BY WRONGFUL ACT.
Mental suffering as element of damages. 11 C. C. A. 563.
Punitive damages. 44 C. C. A. 259.
What law governs actions. 47 C. C. A. 606.
Nonresident aliens as beneficiaries under death acts. 91 C. C. A. 396.

DECREES.
Power of court to amend or modify interlocutory orders and decrees. 61 C. C. A. 236.

DEDICATION.
Of copyright to public. 69 C. C. A. 563.

DEEDS.
Names of parties. 23 C. C. A. 146.
Construction and operation of conveyances of real property and interests therein by executors or administrators. 74 C. C. A. 382.
Competency of witnesses attesting execution of deed. 95 C. C. A. 331.

DEMURRAGE.
Quick dispatch. 14 C. C. A. 657; 21 C. C. A. 342.
Definition and general principles. 21 C. C. A. 337; 46 C. C. A. 4.

DEPOSITION.
Conformity to state practice. 5 C. C. A. 602; 27 C. C. A. 392; 71 C. C. A. 110.
Use of deposition when deponent is present. 50 C. C. A. 232.
Irregularities in taking or return of depositions as ground for exclusion as evidence. 73 C. C. A. 608.
Use of deposition by adversary of party taking it. 94 C. C. A. 356.

DICTA.
Of courts. 64 C. C. A. 361.

DIRECTORS.
Personal liability for negligence. 12 C. C. A. 680; 33 C. C. A. 230.

DISCOVERY.
Conformity to state practice. 5 C. C. A. 594; 27 C. C. A. 393.
Persons against whom production and inspection of books or writings may be obtained. 81 C. C. A. 96.
Right to require plaintiff in action for personal injuries to submit to physical examination. 93 C. C. A. 435.

DISMISSAL AND NONSUIT.
Discontinuance, nolle prosequi, or dismissal as bar to subsequent prosecution. 68 C. C. A. 4.

DISSOLUTION.
Of foreign corporations. 7 C. C. A. 421.
Of municipal corporations—Effect on indebtedness. 33 C. C. A. 506.

DIVORCE.
Separation agreements. 38 C. C. A. 608.

DOMICILE.
Effect of change of domicile on the question of diverse citizenship. 10 C. C. A. 251.

DOWER.
How inchoate right extinguished. 3 C. C. A. 316.
In mines. 3 C. C. A. 316.
What estate subject to dower. 3 C. C. A. 316.

DOWER—Cont'd.
Divestiture of inchoate right by legislative action. 4 C. C. A. 295.

ELECTION OF REMEDIES.
Against undisclosed principal or agent. 77 C. C. A. 166.

ELECTRICITY.
Liability for injuries from defects in installation of electric wires and appliances in building. 87 C. C. A. 5.

EMINENT DOMAIN.
Consequential and indirect damages. 16 C. C. A. 468.
Nature of estate or interest acquired in condemnation proceedings. 53 C. C. A. 604.
Nature and extent of power of United States to condemn property for public use. 70 C. C. A. 653.
Proceedings under power of eminent domain as civil suits under laws relating to removal of causes to federal courts. 73 C. C. A. 183.

EQUITY.
Right to costs. 17 C. C. A. 368.
Equitable mortgages. 18 C. C. A. 458.
Stockholders' liability to creditors of corporation. 23 C. C. A. 315; 33 C. C. A. 23.
Compensation of masters in chancery. 27 C. C. A. 475.
Conclusiveness and effect of judgments as between courts of law and equity. 50 C. C. A. 463.
Obtaining possession or establishing title to personal property in equity. 58 C. C. A. 101.
Operation and effect of decision in equitable suit for infringement of patent. 68 C. C. A. 541.
He who comes into equity must come with clean hands. 70 C. C. A. 543.
Restraining collection of taxes because of excessive or unequal assessments or valuations. 97 C. C. A. 16.

ESTOPPEL.
As against state or United States. 16 C. C. A. 353.

EVIDENCE.
New proofs on appeal in admiralty. 3 C. C. A. 322.
Rules of evidence in federal courts—Following state practice. 5 C. C. A. 594.
Examination of party before trial—Conformity to state practice. 5 C. C. A. 602.
Excluded from bill of exceptions. 14 C. C. A. 248.
Burden of proof of negligence where passenger has been injured. 32 C. C. A. 23.
Evidence admissible to show injury to live stock, during transportation, through negligence or accident. 32 C. C. A. 148.

EVIDENCE—Cont'd.
Judicial notice of public laws and regulations. 44 C. C. A. 4.
Use of deposition when deponent is present. 50 C. C. A. 232.
Negative testimony. 52 C. C. A. 82.
As to character or reputation in civil actions. 55 C. C. A. 7.
Presumptions as to customs and usages. 56 C. C. A. 394.
Utility, extent of use, and commercial success as evidence of invention. 59 C. C. A. 620.
Preliminaries to introduction of secondary evidence in criminal prosecutions. 61 C. C. A. 117.
Additional proofs in appellate court without trial de novo. 67 C. C. A. 600.
Presumptions and burden of proof as to cause of loss or injury to goods shipped by vessel, and diligence or negligence of carrier. 68 C. C. A. 398.
Review, by trial court, of evidence given before grand jury. 69 C. C. A. 488.
Circumstantial evidence of corpus delicti. 70 C. C. A. 156.
Procedure of federal courts and adoption of state practice as to taking proof. 71 C. C. A. 110.
Evidence of membership in corporation. 72 C. C. A. 423.
Admission on joint trial, of evidence competent only against one or part of defendants. 73 C. C. A. 295.
Irregularities in taking or return of depositions as ground for exclusion as evidence. 73 C. C. A. 608.
Expert testimony as to value of services. 74 C. C. A. 257.
Admissibility, on trial of joint indictments, of acts and declarations of conspirators and codefendants after accomplishment of object. 74 C. C. A. 472.
Inferences from evidence as dependent on sufficiency and degree of proof. 74 C. C. A. 561.
Evidence of emancipation of child. 75 C. C. A. 393.
Photographs as evidence in civil actions. 78 C. C. A. 145.
Weight and sufficiency of evidence of willful burning by insured as a defense to action on policy. 79 C. C. A. 455.
Persons against whom production and inspection of books or writings may be obtained. 81 C. C. A. 96.
Admissibility of written instruments in criminal prosecutions as dependent on preliminary proof. 82 C. C. A. 8.
Application of doctrine of res ipsa loquitur in actions for injuries to servants. 82 C. C. A. 121.
Presumptions and burden of proof of invention. 87 C. C. A. 264.

EVIDENCE—Cont'd.
Admissibility against accused of evidence wrongfully obtained, irrespective of question of compelling accused to criminate himself. 91 C. C. A. 2.
Right to require plaintiff in action for personal injuries to submit to physical examination. 93 C. C. A. 435.
Use of deposition by adversary of party taking it. 94 C. C. A. 356.
Examination of witnesses by court. 95 C. C. A. 4.
Competency of physicians or surgeons to testify as to communications by patients or as to information acquired professionally as dependent on subject-matter. 97 C. C. A. 129.
Communications by or between persons having a common interest as privileged. 97 C. C. A. 340.

EXCEPTIONS, BILL OF.
Time of filing—When regulated by state practice. 5 C. C. A. 594.
Exclusion of evidence from. 14 C. C. A. 248.

EXCHANGES.
Membership in stock exchange as an asset in bankruptcy. 43 C. C. A. 389.
Quotations of prices and transactions on exchanges. 61 C. C. A. 2.

EXECUTIVE DEPARTMENTS.
Regulations of. 26 C. C. A. 239.

EXECUTORS AND ADMINISTRATORS.
Citizenship as affecting the jurisdiction of the federal courts. 10 C. C. A. 252.
Probate jurisdiction of federal courts. 36 C. C. A. 276.
Construction and operation of conveyances of real property and interests therein by executor or administrator. 74 C. C. A. 382.

EXTINGUISHMENT.
Of maritime liens. 17 C. C. A. 102.

EXTRADITION.
Scope of review on habeas corpus to procure release of person sought to be extradited. 62 C. C. A. 506.
Fugitives from justice under extradition laws. 63 C. C. A. 104.
Identity of offenses charged in requisition for extradition and indictment, and immunity from prosecution for other offense. 85 C. C. A. 275.

FALSE IMPRISONMENT.
Waiver of illegality of arrest affecting right of action for. 92 C. C. A. 594.

FEDERAL COURTS.
Jurisdiction of circuit courts of appeals in general. 1 C. C. A. 6; 32 C. C. A. 475.
Jurisdiction as affected by state laws. 1 C. C. A. 513.

FEDERAL COURTS—Cont'd.
Jurisdiction of circuit court of appeals to review interlocutory decrees in patent cases. 3 C. C. A. 572; 27 C. C. A. 189; 32 C. C. A. 484.
Conformity of practice in common-law actions to that of state court. 5 C. C. A. 594; 27 C. C. A. 392.
Jurisdiction over corporations. 6 C. C. A. 174.
State laws as rules of decision in federal courts. 11 C. C. A. 71; 29 C. C. A. 553.
Diverse citizenship as a ground of federal jurisdiction. 10 C. C. A. 249; 27 C. C. A. 298.
Jurisdiction in cases involving federal question. 11 C. C. A. 308; 35 C. C. A. 7.
Jurisdiction and judgments of Indian courts. 11 C. C. A. 468.
Federal jurisdiction of suits against state. 13 C. C. A. 165.
Orders, decrees, and judgments reviewable in circuit court of appeals. 13 C. C. A. 374; 90 C. C. A. 566.
Jurisdiction as affected by possession of the subject-matter. 15 C. C. A. 6.
Enjoining proceedings in state courts. 16 C. C. A. 90; 27 C. C. A. 575; 63 C. C. A. 437.
Lack of jurisdiction of United States circuit court. 16 C. C. A. 507.
Removal of causes—Separable controversy. 18 C. C. A. 86; 35 C. C. A. 155.
Jurisdiction in admiralty as to matters of contract. 18 C. C. A. 347; 27 C. C. A. 530.
Jurisdiction of circuit courts as determined by the amount in controversy. 19 C. C. A. 75; 36 C. C. A. 459.
Jurisdiction in admiralty to enforce liens created by state laws. 21 C. C. A. 21.
Conclusiveness of judgment between federal and state courts. 21 C. C. A. 478; 49 C. C. A. 468.
Conflict of jurisdiction with state courts. 22 C. C. A. 356.
Jurisdiction in mortgage foreclosure. 24 C. C. A. 523.
Jurisdiction on habeas corpus. 25 C. C. A. 4.
Mandamus to enforce payment of judgment against municipality. 25 C. C. A. 475.
Suits by and against receivers of. 26 C. C. A. 49.
Jury trial—Province of court and jury. 26 C. C. A. 528.
Supplementary and ancillary proceedings and relief. 36 C. C. A. 195.
Probate jurisdiction. 36 C. C. A. 276.
Admiralty jurisdiction of suits between foreigners. 37 C. C. A. 193.
Enjoining proceedings in federal courts. 45 C. C. A. 591.
Pendency of action in state or federal court as ground for abatement of action in the other. 47 C. C. A. 205; 73 C. C. A. 521.

FEDERAL COURTS—Cont'd.
Review of jurisdiction of circuit courts. 48 C. C. A. 351.
Waiver of right as to district in which suit may be brought. 52 C. C. A. 192; 87 C. C. A. 634.
Procedure of federal courts and adoption of state practice as to taking proof. 71 C. C. A. 110.
Legal and equitable remedies and proceedings on removal from state court. 75 C. C. A. 4.
Fraudulent joinder of parties to prevent removal of cause to federal court. 78 C. C. A. 362.
Jurisdiction of federal courts to enforce or remove liens or incumbrances on property of parties not inhabitants of nor found in district of suit. 80 C. C. A. 7.
What are suits against states within the meaning of constitutional amendment eleven. 92 C. C. A. 25.
Decisions of courts as authority in other co-ordinate courts. 97 C. C. A. 472.

FEDERAL QUESTIONS.
As conferring jurisdiction on United States courts. 11 C. C. A. 308; 35 C. C. A. 7.

FEES.
Imposition of extra allowance of costs, or fees as denial of equal protection of law. 72 C. C. A. 547.

FELLOW SERVANTS.
Who are. 8 C. C. A. 668; 31 C. C. A. 286.
Concurrent negligence of master and fellow servant. 40 C. C. A. 236.

FERRIES.
As carriers. 20 C. C. A. 536.

FIDELITY INSURANCE. 19 C. C. A. 273.

FIRES.
As a peril of the sea. 19 C. C. A. 472.
Presumption of negligence from railroad fires. 41 C. C. A. 370.
Fire escapes on buildings. 64 C. C. A. 217.
What constitutes loss by fire under insurance policy. 72 C. C. A. 3.

FORECLOSURE.
In federal courts. 24 C. C. A. 523.
Distribution of proceeds. 29 C. C. A. 639.

FOREIGN CORPORATIONS.
Status under the rule of comity. 7 C. C. A. 419.
Dissolution. 7 C. C. A. 421.
Exclusion—Regulation and taxation. 24 C. C. A. 13.
What constitutes "doing business" in state. 33 C. C. A. 585; 72 C. C. A. 622.
Service of process. 45 C. C. A. 3; 78 C. C. A. 473.

FORMER JEOPARDY.
Discontinuance, nolle prosequi, or dismissal as bar to subsequent prosecution. 68 C. C. A. 4.

FRANCHISES.
As assets in bankruptcy. 43 C. C. A. 389.

FRAUD.
In use of trade-marks and trade-names. 17 C. C. A. 579, 657; 20 C. C. A. 165; 30 C. C. A. 380.
Nonmailable matter. 30 C. C. A. 86.
Liabilities of corporations. 39 C. C. A. 16.
Misrepresentation and concealment by vendor of goods as to financial condition as affecting validity of contract of sale. 87 C. C. A. 126.
In acquisition of real property as creating constructive trust. 94 C. C. A. 485.

FRAUDS, STATUTE OF.
Sufficiency of expression of consideration in memorandum within statute. 46 C. C. A. 183.

GARNISHMENT.
Following state practice. 5 C. C. A. 606; 27 C. C. A. 393.
Of receivers. 26 C. C. A. 49.
Nature of rights acquired by garnishment proceedings. 76 C. C. A. 270.
Of debts and demands not due. 85 C. C. A. 373.

GENERAL AVERAGE.
Marine insurance. 20 C. C. A. 357.

GIFTS.
Revocation of gifts causa mortis. 54 C. C. A. 143.

GRAND JURY.
Review by trial court, of evidence given before grand jury. 69 C. C. A. 488.

GUARANTY.
Discharge of guarantor by discharge of principal without payment or satisfaction. 78 C. C. A. 266.

GUARANTY INSURANCE. 19 C. C. A. 271.

GUARDIAN AND WARD.
Citizenship as affecting the jurisdiction of the federal courts. 10 C. C. A. 253; 27 C. C. A. 300.
Liability of guardian for money loaned. 91 C. C. A. 622.

HABEAS CORPUS.
Jurisdiction of federal courts. 25 C. C. A. 4.
Scope of review on habeas corpus to procure release of persons sought to be extradited. 62 C. C. A. 506.

HEALTH.
Inspection, quarantine, and sanitary regulations interfering with interstate commerce. 59 C. C. A. 191.

HOMESTEAD.
Rights acquired by homestead settlements and entries on public lands. 59 C. C. A. 434.

HOSPITALS.
Liability for negligence. 47 C. C. A. 134.

HUSBAND AND WIFE.
Liability of husband for negligence and torts of wife. 12 C. C. A. 196.
Paraphernal property. 31 C. C. A. 40.
Separation agreements. 38 C. C. A. 608.
Citizenship of married women. 65 C. C. A. 5.
Rights of action between. 79 C. C. A. 306.

IMPLICATION.
Repeal of statutes by implication. 38 C. C. A. 136.

IMPROVEMENTS.
Rights of co-tenant as to improvements made under mistaken belief of perfect title. 69 C. C. A. 19.

INDEBTEDNESS.
Constitutional and statutory limitations of municipal indebtedness. 36 C. C. A. 6.

INDEPENDENT CONTRACTORS.
Negligence of employés. 28 C. C. A. 392.

INDIANS.
Jurisdiction and judgments of Indian courts. 11 C. C. A. 468.
Citizenship of. 27 C. C. A. 298.

INDICTMENT AND INFORMATION.
Consolidation of and trial of indictments together. 69 C. C. A. 287.

INFANTS.
Imputed negligence. 34 C. C. A. 4.
Age as affecting contributory negligence. 37 C. C. A. 362.
Implied emancipation of child. 71 C. C. A. 629.
Evidence of emancipation of child. 75 C. C. A. 393.

INJUNCTION.
Restraining proceedings in state courts. 16 C. C. A. 90; 27 C. C. A. 575; 63 C. C. A. 437.
Jurisdiction of Circuit Court of Appeals to review interlocutory decrees. 32 C. C. A. 481.
Restraining pollution of water courses. 37 C. C. A. 544.
Right of taxpayer to enjoin misuse of public funds and property. 38 C. C. A. 458.

INJUNCTION—Cont'd.
Restraining proceedings in federal courts. 45 C. C. A. 591.
Restraining criminal proceedings. 51 C. C. A. 133.
Restraining breach of contract of employé not to engage in competing business. 53 C. C. A. 492.
Persons entitled to restrain wrongful enforcement of tax. 54 C. C. A. 550.
Restraining enforcement of judgment pending establishment or enforcement of set-off or counterclaim. 58 C. C. A. 532.
Grounds for denial of preliminary in-injunctions in patent infringement suits. 72 C. C. A. 123.
Restraining boycotts, strikes, and other combinations by employés interfering with commerce or business. 86 C. C. A. 313.
Against nuisance. 89 C. C. A. 155.
Consideration of comparative injuries to plaintiff and defendant in determining right to injunction. 92 C. C. A. 276.
Restraining collection of taxes because of excessive or unequal assessments or valuations. 97 C. C. A. 16.

INJURIOUS NOTICES.
Nonmailable matter. 30 C. C. A. 93.

INNKEEPERS.
Fire escapes on buildings. 64 C. C. A. 217.
Liabilities for personal injuries to guests. 66 C. C. A. 483.

INSANE PERSONS.
Contracts of persons non compos mentis under guardianship. 33 C. C. A. 264.
Effect of insanity on the question of suicide in insurance suits. 16 C. C. A. 623; 28 C. C. A. 284.

INSOLVENCY.
Effect of national bankruptcy act on state insolvency laws and on assignments for benefit of creditors. 51 C. C. A. 11.
Right to proceeds of collection on insolvency of collecting bank. 69 C. C. A. 333.

INSPECTION.
Of public records. 49 C. C. A. 210.
Inspection, quarantine, and sanitary regulations interfering with interstate commerce. 59 C. C. A. 191.
Duty of servant to inspect appliances and places for work. 65 C. C. A. 370.

INSURANCE.
Conditions in policy as to time for bringing suit. 2 C. C. A. 473; 35 C. C. A. 404.
Conditions of policy—Arbitration. 9 C. C. A. 628; 39 C. C. A. 389.

INSURANCE—Cont'd.
Authority of insurance agent to waive prepayment of premiums. 13 C. C. A. 292.
Suicide as a defense to a life policy. 16 C. C. A. 623; 28 C. C. A. 284.
Credit insurance. 19 C. C. A. 271; 34 C. C. A. 165.
Guaranty insurance. 19 C. C. A. 271.
Fidelity insurance. 19 C. C. A. 273.
Title insurance. 19 C. C. A. 278.
Marine insurance—Perils of the sea. 19 C. C. A. 405.
Marine insurance—General average. 20 C. C. A. 357.
Waiver of condition against other insurance. 27 C. C. A. 46.
Divisibility of contracts. 30 C. C. A. 474.
Waiver by acceptance of premiums. 33 C. C. A. 369.
Accident insurance—Risks and causes of loss. 38 C. C. A. 3; 85 C. C. A. 126.
What constitutes an insurable interest in human life. 39 C. C. A. 632.
Change of beneficiary. 40 C. C. A. 4.
Commencement of risk. 41 C. C. A. 273.
What law governs policies. 46 C. C. A. 287; 83 C. C. A. 100.
Authority of insurance agents as to acceptance of risks. 49 C. C. A. 335.
Liability for injuries sustained by assured while engaged in occupation not covered by policy. 51 C. C. A. 434.
Time for notice of loss. 55 C C. A. 376.
Notice of premiums, dues, and assessments. 59 C. C. A. 317.
Mutual benefit insurance contracts as affected by subsequent provisions and amendments of charter, constitution, or by-laws. 63 C. C. A. 285.
Subrogation of insurer under assignment of rights of insured. 65 C. C. A. 615.
What constitutes loss by fire under insurance policy. 72 C. C. A. 3.
Weight and sufficiency of evidence of willful burning by insured as a defense to action on policy. 79 C. C. A. 455.
Accounting for profits, dividends or surplus of mutual insurance company at instance of policy holders or stockholders. 81 C. C. A. 4.
Acceptance of benefits by relief association or insurance procured by master as affecting master's liability for injuries to servant. 94 C. C. A. 139.

INTENT.
As an element in offer and acceptance of proposition. 16 C. C. A. 199.

INTERNATIONAL LAW.
Effect of acquisition of territory by United States on laws and property rights therein. 80 C. C. A. 457.

INTERSTATE COMMERCE.
Taxation of by state. 8 C. C. A. 492.
Jurisdiction of federal courts of suits under interstate commerce act. 11 C. C. A. 318.
State laws interfering with interstate commerce. 24 C. C. A. 21.
Inspection, quarantine, and sanitary regulations interfering with interstate commerce. 59 C. C. A. 191.

JUDGMENT.
Finality of judgments for purposes of review. 2 C. C. A. 379; 17 C. C. A. 238; 28 C. C. A. 482.
Method of entering judgment in federal court—Following state practice. 5 C. C. A. 604.
Of federal courts—Jurisdiction as involving federal question. 11 C. C. A. 317.
Giving full faith and credit—Jurisdiction of federal courts. 11 C. C. A. 318.
Rendition on Sunday. 12 C. C. A. 462.
Conclusiveness as between federal and state courts. 21 C. C. A. 478; 49 C. C. A. 468.
Enforcement against municipality by mandamus. 25 C. C. A. 475.
Conclusiveness and effect of judgments as between courts of law and equity. 50 C. C. A. 463.
Effect of judgment against corporation in action to enforce stockholder's liability. 52 C. C. A. 305.
Restraining enforcement of judgment pending establishment or enforcement of set-off or counterclaim. 58 C. C. A. 532.
Power of court to amend or modify interlocutory orders and decrees. 61 C. C. A. 236.
Authority of attorney after judgment. 67 C. C. A. 130.
Satisfaction of one or more judgments for same cause of action. 67 C. C. A. 322.
Operation and effect of decision in equitable suit for infringement of patent. 68 C. C. A. 541.
Judgment against one defendant sued jointly for conspiracy. 80 C. C. A. 245.
Deficiency judgments and personal liability on foreclosure of vendors' liens. 82 C. C. A. 488.
Conclusiveness of judgment as dependent on theory of action or recovery. 96 C. C. A. 163.
Decisions of courts as authority in other co-ordinate courts. 97 C. C. A. 472.

JUDICIAL SALES.
On Sunday. 12 C. C. A. 462.
Contracts restraining competition in bidding. 28 C. C. A. 192.

JURISDICTION.
Of federal courts. See Federal Courts.
Of Indian courts. 11 C. C. A. 468.
As affected by possession of the subject-matter. 15 C. C. A. 6.
Conflict between federal and state courts. 22 C. C. A. 356.
Probate jurisdiction. 36 C. C. A. 276.
Admiralty jurisdiction of suits between foreigners. 37 C. C. A. 193.

JURY.
Right to trial by jury in federal court. 5 C. C. A. 603; 26 C. C. A. 528.
Following state practice. 5 C. C. A. 603; 27 C. C. A. 393.
Instructing jury and receiving verdict on Sunday. 12 C. C. A. 462.
Trial by jury in criminal prosecutions. 39 C. C. A. 275.
Right to waive trial by jury in criminal prosecutions. 94 C. C. A. 7.

LACHES.
As a defense in suits for infringement of patents, copyrights, and trademarks. 22 C. C. A. 211; 36 C. C. A. 613.

LAND DEPARTMENT.
Conclusiveness and effect of decisions. 22 C. C. A. 38; 28 C. C. A. 344; 57 C. C. A. 207.

LANDLORD AND TENANT.
Holding over by tenant after expiration of term as affecting liability for rent. 71 C. C. A. 513.
Liabilities of landlord and co-tenant for injuries to property of tenant caused by negligence of co-tenant. 86 C. C. A. 108.

LIBEL AND SLANDER.
Evidence of other offenses and publications in mitigation of damages. 40 C. C. A. 168.
Liabilities of corporations. 39 C. C. A. 15.
Retraction, apology, or reparation as ground for mitigation of damages. 71 C. C. A. 315.

LICENSE.
Implied rights of licensee of a patent. 25 C. C. A. 280.
Rights of licensee on train. 31 C. C. A. 164.
Licenses as assets in bankruptcy. 43 C. C. A. 389.
Sublicenses and assignments of licenses for use or sale of patents. 64 C. C. A. 596.

LIENS.
Maritime liens. 15 C. C. A. 679; 17 C. C. A. 102; 21 C. C. A. 21.
Attorneys' liens. 32 C. C. A. 229.
Maritime liens for torts. 34 C. C. A. 565.
Who are entitled to liens or preferences as laborers or employés. 47 C. C. A. 2.

LIENS—Cont'd.
Lien of banks on stock. 56 C. C. A. 179.
Continuance or revival of mechanics' liens. 71 C. C. A. 17.
Persons entitled to liens against railroads for labor and supplies. 75 C. C. A. 274.
Jurisdiction of federal courts to enforce or remove liens or incumbrances on property of parties not inhabitants of nor found in district of suit. 80 C. C. A. 7.

LIFE INSURANCE.
Suicide as a defense. 16 C. C. A. 623; 28 C. C. A. 284.
Waiver by acceptance of premiums. 33 C. C. A. 369.

LIMITATION OF ACTIONS.
Against corporate officers. 53 C. C. A. 7.
Bar of action as determined by limitations of state other than that in which action is brought. 58 C. C. A. 186.
Commencement of period of limitations against prosecutions for continuing offenses. 84 C. C. A. 519.

LITERARY PROPERTY.
Rights of authors to control of publication, disposition or use of their productions independent of statutory copyright. 77 C. C. A. 620.

LOTTERY.
What constitutes. 12 C. C. A. 346; 85 C. C. A. 580.
Nonmailable matter. 30 C. C. A. 90.

MAIL.
Nonmailable matter. 30 C. C. A. 79.

MALICIOUS PROSECUTION.
Liabilities of corporations. 39 C. C. A. 14.

MANDAMUS.
In aid of appeals. 10 C. C. A. 450.
To enforce payment of judgment against municipality. 25 C. C. A. 475.
Appeal or mandamus. 47 C. C. A. 376.
Enforcement of decree of appellate court by mandamus. 77 C. C. A. 409.

MANUFACTURES.
Liabilities of manufacturers of injurious substances or defective machinery and appliances for injuries to persons other than immediate vendees. 57 C. C. A. 5.
Contracts for sale of things to be manufactured. 58 C. C. A. 363.
Fire escapes on factories. 64 C. C. A. 217.

MARINE INSURANCE.
Perils of the sea. 19 C. C. A. 465.
General average. 20 C. C. A. 357.

MARITIME LIENS.
For supplies and services—Presumption as to credit to vessel. 15 C. C. A. 679.
Waiver and extinguishment. 17 C. C. A. 102.
Created by state laws. 21 C. C. A. 21.
For torts. 34 C. C. A. 565.

MARRIAGE.
Effect of existing marriage on subsequent marriage or contract to marry. 50 C. C. A. 583.
Marriage by mutual agreement. 52 C. C. A. 581.

MASTER AND SERVANT.
Who are fellow servants. 8 C. C. A. 668; 31 C. C. A. 286.
Liabilities of carriers for injuries caused by negligence or torts of servants. 10 C. C. A. 466; 27 C. C. A. 651.
Who are independent contractors. 28 C. C. A. 392.
Divisibility of contracts for services. 30 C. C. A. 467.
Negligence of both—Division of damages in admiralty. 30 C. C. A. 678.
Duty of railroad companies to furnish safe appliances. 37 C. C. A. 8.
Assumption of risk incident to employment. 38 C. C. A. 314.
Concurrent negligence of master and fellow servant. 40 C. C. A. 236.
Injuries to servant while not on duty. 44 C. C. A. 489.
Duty of railroad companies to block switches. 46 C. C. A. 98.
Who are entitled to liens or preferences as laborers or employés. 47 C. C. A. 2.
What law governs master's liability for injuries to servant. 48 C. C. A. 232.
Liability for injuries to volunteers. 51 C. C. A. 509.
Restraining breach of contract of employé not to engage in competing business. 53 C. C. A. 492.
Contracts relating to liability of master for negligence causing injury to or death of servant. 62 C. C. A. 5.
Mitigation of damages for wrongful discharge from employment by failure of servant to seek or accept other employment. 64 C. C. A. 5.
Fire escapes on buildings. 64 C. C. A. 217.
Duty of servant to inspect appliances and places for work. 65 C. C. A. 370.
Importation of contract labor. 66 C. C. A. 133.
Relation of carrier to persons carried under contract with their employers. 67 C. C. A. 427.
Right to invention as between employer and employé. 71 C. C. A. 221.
Expert testimony as to value of services. 74 C. C. A. 257.
Application of doctrine of res ipsa loquitur in actions for injuries to servants. 82 C. C. A. 121.

MASTER AND SERVANT—Cont'd.
Duty of master to promulgate rules as to methods of work. 86 C. C. A. 8.
What constitutes wages. 89 C. C. A. 289.
Termination of employment for indefinite term. 90 C. C. A. 455.
Acceptance of benefits from relief association or insurance procured by master as affecting master's liability for injuries to servant. 94 C. C. A. 139.

MASTERS IN CHANCERY.
Compensation. 27 C. C. A. 475.

MECHANICS' LIENS.
Continuance or revival of mechanics' liens. 71 C. C. A. 17.
Persons entitled to liens against railroads for labor and supplies. 75 C. C. A. 274.

MENTAL SUFFERING.
As an element of damages. 11 C. C. A. 556.
Damages for, by delay in delivering telegram. 11 C. C. A. 571; 15 C. C. A. 250; 28 C. C. A. 62.

MINES AND MINING.
Right of dower in mines. 3 C. C. A. 316.
Conclusiveness of patents for mining claims. 28 C. C. A. 346; 48 C. C. A. 674.
Mining partnerships. 35 C. C. A. 515.
Rights under mining location to veins having apexes within claim. 66 C. C. A. 311.
Sufficiency of discovery of mineral characteristics to support mining location. 79 C. C. A. 6.
Partition of mineral rights or lands. 81 C. C. A. 405.

MOBS.
Municipal liability for acts of mobs. 57 C. C. A. 517.

MONOPOLIES.
Constitutional restrictions on grant. 14 C. C. A. 6.
Monopolistic contracts—Validity as affected by public policy. 34 C. C. A. 486.
Rights and liabilities of parties contracting with trusts or combinations in restraint of trade. 78 C. C. A. 612.

MORTGAGES.
Equitable mortgages — Agreement to give a mortgage. 18 C. C. A. 458.
Names of parties in deeds and mortgages. 23 C. C. A. 146.
Foreclosure in federal courts. 24 C. C. A. 523.
Distribution of proceeds on foreclosure. 29 C. C. A. 639.
Taxation of. 31 C. C. A. 467.
Subrogation to rights of mortgagee. 42 C. C. A. 304.

MUNICIPAL CORPORATIONS.
Liability for torts of public officers. 14 C. C. A. 534.
Enforcement of judgment against municipality by mandamus. 25 C. C. A. 475.
Dissolution and reincorporation—Effect on indebtedness. 33 C. C. A. 506.
Constitutional and statutory limitations of municipal indebtedness. 36 C. C. A. 6.
Right of taxpayer to enjoin misuse of public funds and property. 38 C. C. A. 458.
Bona fide purchasers of municipal bonds. 41 C. C. A. 6.
Rights of telegraph and telephone companies to use of streets. 44 C. C. A. 155.
Municipal liability for acts of mobs. 57 C. C. A. 517.
Effect of violation of ordinances limiting speed of trains. 59 C. C. A. 5.
Rights and remedies of holders of invalid municipal securities. 66 C. C. A. 235.
Relative rights of street railroads, and vehicles and pedestrians in use and occupation of streets. 73 C. C. A. 12.
Sufficiency of presentation, service, or filing of claim for personal injuries or notice thereof as condition precedent to action against municipal corporation. 83 C. C. A. 559.

NAMES.
Use of person's name as trade-name. 17 C. C. A. 579; 27 C. C. A. 357.
Of parties in deeds and mortgages. 23 C. C. A. 146.
Of books or other publications as trade-marks or trade-names. 88 C. C. A. 601.

NAVIGABLE WATERS.
Obstruction — Jurisdiction of federal courts. 11 C. C. A. 318.

NEGLIGENCE.
Liabilities of carriers for negligence of servants. 10 C. C. A. 466; 27 C. C. A. 651.
Of wife—Liability of husband. 12 C. C. A. 196.
Personal liability of directors. 12 C. C. A. 680; 33 C. C. A. 230.
In transmission of telegram. 14 C. C. A. 177.
Of independent contractor. 28 C. C. A. 392.
Duty of railroads to give warning signals at crossing. 29 C. C. A. 90.
Of both master and servant—Division of damages in admiralty. 30 C. C. A. 678.
Injuries to trespasser on train. 31 C. C. A. 76.
Injuries to one traveling on pass. 31 C. C. A. 164.

NEGLIGENCE—Cont'd.
Injuries to licensee on train. 31 C. C. A. 164.
Who are fellow servants. 31 C. C. A. 286.
Burden of proof where passengers have been injured. 32 C. C. A. 23.
Evidence admissible to show injury to live stock through negligence or accident during transportation. 32 C. C. A. 148.
Imputed to infant. 34 C. C. A. 4.
Sleeping-car companies. 34 C. C. A. 386.
Duty of railroad companies to furnish safe appliances. 37 C. C. A. 8.
Age as affecting contributory negligence. 37 C. C. A. 362.
Liabilities of corporations. 39 C. C. A. 15.
Concurrent negligence of master and fellow servant. 40 C. C. A. 236.
Care required of motormen. 40 C. C. A. 361.
Presumption from railroad fires. 41 C. C. A. 370.
Injuries to servant not on duty. 44 C. C. A. 489.
Duty of railroad companies to block switches. 46 C. C. A. 98.
Liabilities of charitable institutions for negligence. 47 C. C. A. 134.
What law governs master's liability for injuries to servant. 48 C. C. A. 232.
Liability of employer for injuries to volunteers. 51 C. C. A. 509.
Injuries to railroad passengers while occupying positions other than regular seats. 54 C. C. A. 4.
Injuries to persons at public entertainment or exhibition. 56 C. C. A. 502.
Liabilities of manufacturers and venders of injurious substances or defective machinery and appliances for injuries to persons other than immediate vendees. 57 C. C. A. 5.
In ejection of passengers or trespassers under disability. 62 C. C. A. 422.
Liabilities of connecting carriers for injuries to passengers. 64 C. C. A. 485.
Fire escapes on buildings. 64 C. C. A. 217.
Liabilities of innkeepers for personal injuries to guests. 66 C. C. A. 483.
Presumptions and burden of proof as to cause of loss or injury to goods shipped by vessel and diligence or negligence of carrier. 68 C. C. A. 398.
Of driver of vehicle imputed to persons riding with him. 88 C. C. A. 497.
Liability of railroad company operating or using road of other company for injuries incident to the operation and use. 92 C. C. A. 152.

NEGLIGENCE—Cont'd.
Right to require plaintiff in action for personal injuries to submit to physical examination. 93 C. C. A. 435.
Care required of merchants or traders as to customers in store or on premises. 95 C. C. A. 406.

NEUTRALITY LAWS.
Object and scope of neutrality law. 28 C. C. A. 622.

NEW TRIAL.
Following state practice. 5 C. C. A. 605; 27 C. C. A. 393.
Jurisdiction of lower court to rehear cause or grant new trial after remand by appellate court. 70 C. C. A. 416.

NOLLE PROSEQUI.
As bar to subsequent prosecution. 68 C. C. A. 4.

NON COMPOS MENTIS.
Contracts of persons non compos mentis under guardianship. 34 C. C. A. 264.

NONMAILABLE MATTER.
Obscene matter. 30 C. C. A. 79.
Frauds and counterfeiting. 30 C. C. A. 86.
Lotteries. 30 C. C. A. 90.
Injurious notices. 30 C. C. A. 93.
Threatening and dunning postal cards. 30 C. C. A. 94.

NONRESIDENTS.
Taxation of property. 31 C. C. A. 467.

NOTICE.
Sufficiency of notice of dissolution of partnership. 54 C. C. A. 229.
To agent—Adverse interest, fraud, or collusion of agent. 56 C. C. A. 561.
Time for notice of loss under insurance policy. 55 C. C. A. 376.
Of insurance, premiums, dues, and assessments. 59 C. C. A. 317.
Of application for appointment of receiver. 88 C. C. A. 7.

NUISANCE.
Injunction against. 89 C. C. A. 155.

OBITER DICTUM. 64 C. C. A. 361.

OBSCENE MATTER.
Nonmailable matter. 30 C. C. A. 79.

OFFICE AND OFFICER.
Jurisdiction of federal courts in suits against federal officers. 11 C. C. A. 316.
Torts of public officers. 14 C. C. A. 534.
Liabilities of sureties for acts of officers under color of office. 43 C. C. A. 222.

OFFICE AND OFFICER—Cont'd.
Validity of contracts with public officers as affected by illegality of object or consideration. 56 C. C. A. 10.

ORDERS.
Power of court to amend or modify interlocutory orders and decrees. 61 C. C. A. 236.

PARAPHERNAL PROPERTY.
What constitutes. 31 C. C. A. 40.

PARENT.
Death of child by wrongful act—Damages. 1 C. C. A. 34.
Implied emancipation of child. 71 C. C. A. 629.
Evidence of emancipation of child. 75 C. C. A. 393.

PARTIES.
Citizenship as affecting the jurisdiction of the federal courts. 10 C. C. A. 254; 27 C. C. A. 298; 32 C. C. A. 479.
Names of, in deeds and mortgages. 23 C. C. A. 146.
Persons entitled to enforce specific performance. 47 C. C. A. 493.
Persons entitled to injunction restraining or damages for wrongful enforcement of tax. 54 C. C. A. 550.
Fraudulent joinder to prevent removal of cause to federal court. 78 C. C. A. 362.
Who may be parties in actions by or against associations. 82 C. C. A. 270.
Necessary or proper parties in suits to foreclose vendors' liens on realty. 83 C. C. A. 359.
Credibility of witnesses or parties testifying as question for jury. 88 C. C. A. 143.
Abatement or continuance of action or proceeding on death of one of two or more plaintiffs. 89 C. C. A. 413.
When summons and severance of parties on appeal or writ of error is authorized or required. 93 C. C. A. 608.

PARTITION.
Of mineral rights or lands. 81 C. C. A. 405.

PARTNERSHIP.
Use of partnership name as tradename. 17 C. C. A. 579; 27 C. C. A. 357.
Mining partnerships. 35 C. C. A. 515.
Purchase of copartner's interest. 40 C. C. A. 508.
Liability of partnership for torts of partner. 45 C. C. A. 277.
Power of corporation to form partnership. 50 C. C. A. 131.
Sufficiency of notice of dissolution of partnership. 54 C. C. A. 229.

PARTNERSHIP—Cont'd.
Liability of corporation succeeding to partnership for debt of firm. 80 C. C. A. 560.

PASSENGERS.
Duty of carrier to protect from dangerous fellow passengers. 4 C. C. A. 231.
Right of carrier to restrain or expel disorderly passenger. 4 C. C. A. 231.
Duties and liabilities of sleeping-car companies towards. 10 C. C. A. 335; 34 C. C. A. 386.
Rights against carriers for injuries caused by negligence or torts of servants. 10 C. C. A. 466; 27 C. C. A. 651.
Rights of persons traveling on a pass. 31 C. C. A. 164.
Burden of proof of negligence for injuries to. 32 C. C. A. 23.
Limitation of carrier's liability for injuries to passengers. 32 C. C. A. 301.
Limitation of carrier's liability for injuries to passenger by condition on ticket. 32 C. C. A. 302.
Limitation of liability by carrier for injuries to passenger traveling on pass. 32 C. C. A. 305.
Limitation of carrier's liability for injuries to baggage. 32 C. C. A. 308.
Continuance of passenger relation. 40 C. C. A. 437.
Injuries to railroad passengers while occupying positions other than regular seats. 54 C. C. A. 4.
Negligence in ejecting passengers under disability. 62 C. C. A. 422.
Liabilities of connecting carriers for injuries to passengers. 64 C. C. A. 485.
Relation of carrier to persons carried under contract with their employers. 67 C. C. A. 427.
Accommodations to passengers on vessels. 68 C. C. A. 630.

PATENTS FOR INVENTIONS.
Effect of previous adjudication on circuit court of appeals. 3 C. C. A. 565; 27 C. C. A. 427; 32 C. C. A. 475.
Review of interlocutory decree granting or continuing injunction in circuit court of appeals. 3 C. C. A. 572; 27 C. C. A. 189; 32 C. C. A. 484.
Jurisdiction of federal courts in suits relating to patents. 11 C. C. A. 313.
Pleading in infringement suits—Demurrer for want of novelty and invention. 19 C. C. A. 595.
Laches as a defense in suits for infringement. 22 C. C. A. 211; 36 C. C. A. 613.
Power of patentee to control his invention. 25 C. C. A. 280.

PATENTS FOR INVENTIONS—Cont'd.
Contributory infringement of patents. 43 C. C. A. 485; 86 C. C. A. 206.
Accounting by infringer for profits. 50 C. C. A. 8.
Time for application for reissue. 55 C. C. A. 560.
Utility, extent of use, and commercial success as evidence of invention. 59 C. C. A. 620.
Sublicenses and assignments of licenses for use or sale of patents. 64 C. C. A. 596.
Amendment of application. 68 C. C. A. 239.
Operation and effect of decision in equitable suit for infringement. 68 C. C. A. 541.
Priority and continuance of public use of invention as affecting patentability. 69 C. C. A. 646.
Abandonment of invention. 70 C. C. A. 6.
Right to inventions as between employer and employé. 71 C. C. A. 221.
Grounds for denial of preliminary injunctions in patent infringement suits. 72 C. C. A. 123.
Presumptions and burden of proof of invention. 87 C. C. A. 264.
Patentability of combinations of old elements as dependent on results attained. 91 C. C. A. 123.
Conclusiveness and effect of decisions of patent office in proceedings on applications. 95 C. C. A. 530.

PATENTS TO PUBLIC LANDS.
Cancellation. 22 C. C. A. 38.
Conclusiveness of land patents. 28 C. C. A. 346.
Conclusiveness of patents for mining claims. 28 C. C. A. 346; 48 C. C. A. 674.

PAYMENT.
Implied obligation to pay for benefits received. 2 C. C. A. 488.

PENALTIES.
Imposition of penalty, extra allowance of damages, costs, or fees as denial of equal protection of law. 72 C. C. A. 547.

PERILS OF THE SEA.
Damages to ship and cargo by vermin. 18 C. C. A. 231; 19 C. C. A. 473.
Damages to ship and cargo through various causes. 19 C. C. A. 465; 64 C. C. A. 118.

PHYSICIANS AND SURGEONS.
Expert testimony as to value of services. 74 C. C. A. 257.
Competency of physicians or surgeons to testify as to communications by patients or as to information acquired professionally as dependent on subject-matter. 97 C. C. A. 129.

PLEADING.
Following state practice. 5 C. C. A. 594; 27 C. C. A. 392.
Averments of citizenship to show jurisdiction in federal courts. 10 C. C. A. 261; 27 C. C. A. 303.
In patent infringement suits—Demurrer for want of novelty and invention. 19 C. C. A. 595.
Private statutes. 67 C. C. A. 241.

PLEDGES.
Rights and liabilities of pledgees of corporate stock. 42 C. C. A. 135.

POST OFFICE.
Nonmailable matter. 30 C. C. A. 79.

PRACTICE.
As regulated by state laws. 1 C. C. A. 515; 5 C. C. A. 594; 9 C. C. A. 548; 27 C. C. A. 392.

PREJUDICE.
As ground for removal of causes. 8 C. C. A. 95.

PRINCIPAL AND AGENT.
Agency implied from course of dealing. 42 C. C. A. 221.
Liability of principal for torts of agent. 43 C. C. A. 316.
Knowledge of agent as notice to principal—Effect of adverse interest, fraud, or collusion of agent. 56 C. C. A. 561.
Election of remedies against undisclosed principal or agent. 77 C. C. A. 166.

PRINCIPAL AND SURETY.
Liabilities of sureties for acts of officers under color of office. 43 C. C. A. 222.
Death of surety. 49 C. C. A. 591.
Liability of sureties for interest, costs, and attorney's fees. 51 C. C. A. 248.
Discharge of surety on building contract by change in obligation or duty of principal. 52 C. C. A. 427.
Discharge of surety by alteration of instrument. 66 C. C. A. 6.
Liabilities of sureties as dependent on signature of principal to written instrument. 91 C. C. A. 298.

PROBATE.
Jurisdiction of federal courts. 36 C. C. A. 276.

PROCESS.
Following state practice. 5 C. C. A. 599; 27 C. C. A. 393.
Service on foreign corporations. 45 C. C. A. 3; 78 C. C. A. 473.
When summons and severance of parties on appeal or writ of error is authorized or required. 93 C. C. A. 608.

PROPERTY.
Obtaining possession or establishing title to personal property in equity. 58 C. C. A. 101.
Distinctions between real and personal property. 82 C. C. A. 602.

PUBLIC FUNDS.
Right of taxpayer to enjoin misuse of public funds and property. 38 C. C. A. 458.

PUBLIC LANDS.
Liability of purchaser holding equitable title to state taxation. 4 C. C. A. 196.
Not subject to state taxation. 4 C. C. A. 196.
Jurisdiction of federal courts in suits under public land laws. 11 C. C. A. 314.
Decisions of land department—Their conclusiveness and effect. 22 C. C. A. 38; 28 C. C. A. 344; 57 C. C. A. 207.
Rights acquired by homestead settlements and entries. 59 C. C. A. 434.
Bona fide purchasers. 67 C. C. A. 13.

PUBLIC POLICY.
As affecting contracts. 9 C. C. A. 666; 34 C. C. A. 486.
Contracts for lobby services. 29 C. C. A. 446.
As affecting monopolistic contracts. 34 C. C. A. 486.

QUIETING TITLE.
Necessity of possession in suits to quiet title. 39 C. C. A. 522.

RAILROADS. See Carriers.
When land grants taxable. 4 C. C. A. 196.
Duty to give warning signals at crossing. 29 C. C. A. 90.
Rights of trespassers on trains. 31 C. C. A. 76.
Duty of railroad companies to furnish safe appliances. 37 C. C. A. 8.
Location and establishment of stations. 41 C. C. A. 219.
Presumption of negligence from fires. 41 C. C. A. 370.
Injuries to persons at stations. 41 C. C. A. 550.
Abandonment or forfeiture of right of way. 42 C. C. A. 576.
Duty of railroad companies to block switches. 46 C. C. A. 98.
Liability of railroad or street car companies for ejection of trespassers. 51 C. C. A. 578.
Effect of violation of statutes and ordinances regulating speed of trains. 59 C. C. A. 5.
Negligence in ejecting trespassers under disability. 62 C. C. A. 422.
Acquisition or loss of right to railroad right of way by prescription. 63 C. C. A. 7.

RAILROADS—Cont'd.
Persons entitled to liens against railroads for labor or supplies. 75 C. C. A. 274.
Liabilities of railroads for injuries by fire as affected by management of locomotives. 75 C. C. A. 598.
Rights and liabilities of stockholders of railroads on consolidation. 81 C. C. A. 480.
Liability of railroad company operating or using road of other company for injuries incident to the operation and use. 92 C. C. A. 152.
Delegation of legislative power to railroad commissions. 95 C. C. A. 132.
Care required of railroads as to trespassers on or near tracks. 97 C. C. A. 566.

RECEIVERS.
Citizenship as affecting the jurisdiction of the federal courts. 10 C. C. A. 253.
Actions by and against receivers of federal courts. 26 C. C. A. 49.
Receivers' certificates. 26 C. C. A. 350; 94 C. C. A. 601.
Actions by and against receivers and "agents" of national banks. 53 C. C. A. 398.
Preservation and prevention of removal of property beyond jurisdiction pending litigation as ground for appointment of receiver. 57 C. C. A. 80.
Notice of application for appointment of receivers. 88 C. C. A. 7.

RECORDS.
Access to public records. 49 C. C. A. 210.

REFERENCE.
Following state practice. 27 C. C. A. 392.

REFORMATION OF INSTRUMENTS.
As dependent on mutuality of mistake. 93 C. C. A. 10.

REMOVAL OF CAUSES.
As restricted by state laws. 1 C. C. A. 515.
For prejudice or local influence. 8 C. C. A. 95.
Separable controversy. 18 C. C. A. 86; 35 C. C. A. 155.
Actions against federal receivers. 26 C. C. A. 49.
Distinctions between legal and equitable remedies in actions removed to federal courts. 63 C. C. A. 204.
Waiver of right. 66 C. C. A. 612.
Proceedings under power of eminent domain as civil suits under laws relating to removal of causes to federal courts. 73 C. C. A. 183.

REMOVAL OF CAUSES—Cont'd.
Legal and equitable remedies and proceedings on removal from state court. 75 C. C. A. 4.
Fraudulent joinder of parties to prevent removal. 78 C. C. A. 362.

REPEAL OF STATUTES.
Repeal of statutes by implication. 38 C. C. A. 136.

REVIEW.
Necessity of leave to file bill of review after decision on appeal. 4 C. C. A. 72.
In bankruptcy cases. 43 C. C. A. 9.

REWARDS.
Performance of conditions in and acceptance of offer of reward. 79 C. C. A. 98.

RISKS.
Assumption of risk incident to employment. 38 C. C. A. 314.

SALE.
Of patent. 25 C. C. A. 280.
Divisibility of contracts. 30 C. C. A. 470.
Liabilities of venders of injurious substances or defective machinery and appliances for injuries to persons other than immediate vendees. 57 C. C. A. 5.
Contracts for sale of things to be produced or manufactured. 58 C. C. A. 363.
Transfer of title as dependent on appropriation by seller. 83 C. C. A. 470.
What constitutes a contract of conditional sale. 86 C. C. A. 448.
Misrepresentation and concealment by vendee of goods as to financial condition as affecting validity of contract of sale. 87 C. C. A. 126.
Validity of conditions in contracts of conditional sale of personalty. 87 C. C. A. 538.

SALVAGE.
Awards in federal courts. 30 C. C. A. 280.
Grounds for forfeiture. 90 C. C. A. 226.
Right to compensation as between different sets of salvors or successive salvors. 96 C. C. A. 5.

SEAMEN.
Negligence of both master and servant —Division of damages in admiralty. 30 C. C. A. 678.
Rights and liabilities of seamen as to medical treatment. 83 C. C. A. 186.

SEPARABLE CONTROVERSIES.
As ground for removal of cause. 18 C. C. A. 86; 35 C. C. A. 155.

SEPARATION AGREEMENTS. 38 C. C. A. 608.

SET-OFF AND COUNTERCLAIM.
Restraining enforcement of judgment pending establishment or enforcement of set-off or counterclaim. 58 C. C. A. 532.

SHAREHOLDERS.
In national banks. 15 C. C. A. 130; 46 C. C. A. 503.

SHIPPING.
Quick dispatch. 14 C. C. A. 657; 21 C. C. A. 342.
Implied warranty of seaworthiness. 15 C. C. A. 388; 60 C. C. A. 179.
Damages to ships and cargoes by vermin. 18 C. C. A. 231; 19 C. C. A. 473.
Admiralty jurisdiction over contracts. 18 C. C. A. 347; 27 C. C. A. 530.
Loss by perils of the sea. 19 C. C. A. 465; 64 C. C. A. 118.
General average. 20 C. C. A. 357; 84 C. C. A. 316.
Demurrage. 14 C. C. A. 657; 21 C. C. A. 337; 46 C. C. A. 4.
Who are common carriers of goods by water. 20 C. C. A. 535.
Limitation of owner's liability. 45 C. C. A. 387.
Statutory exemptions of shipowners from liability. 49 C. C. A. 11; 83 C. C. A. 294.
Demise of vessel. 55 C. C. A. 225.
Cancellation, surrender, or rescission of charter of vessel. 61 C. C. A. 569.
Presumptions and burden of proof as to cause of loss or injury to goods shipped by vessel, and diligence or negligence of carrier. 68 C. C. A. 398.
Accommodations to passengers on vessels. 68 C. C. A. 630.
Capacity or authority of master of vessel to hypothecate or make bottomry bond. 75 C. C. A. 123.
Liability of vessel for injuries caused by creation of swell. 78 C. C. A. 3.
Deductions and offsets from charter hire of vessel. 84 C. C. A. 254.
Delivery of cargo to vessel affecting liability for loss or injuries. 96 C. C. A. 390.

SIGNALS.
At railroad crossings. 29 C. C. A. 90.

SLEEPING-CAR COMPANIES.
Their duties and liabilities towards their passengers. 10 C. C. A. 335; 34 C. C. A. 386; 89 C. C. A. 10.

SPECIFIC PERFORMANCE.
Persons entitled to enforce specific performance. 47 C. C. A. 493.
Of contracts requiring performance of continuous acts. 49 C. C. A. 103.
Of contracts of which time is the essence. 63 C. C. A. 562.
Necessity of tender of performance. 65 C. C. A. 91.

SPECIFIC PERFORMANCE—Cont'd.
Conditions and provisions for relief to defendant in decree in action for specific performance. 79 C. C. A. 188.
Right of vendor seeking specific performance of contract to have title perfected pending suit. 80 C. C. A. 354.
Possession and improvements under parol contract for sale or gift of land as ground for specific performance. 81 C. C. A. 276.
Right to specific performance as affected by adequacy of remedy at law. 82 C. C. A. 368.

STATE COURTS. See Removal of Causes.
Proceedings enjoined by federal courts. 16 C. C. A. 90; 27 C. C. A. 575; 63 C. C. A. 437.
Jurisdiction of state courts to enforce maritime liens under state laws. 21 C. C. A. 21.
Conclusiveness of judgments between federal and state courts. 21 C. C. A. 478; 49 C. C. A. 468.
Conflict of jurisdiction with federal courts. 22 C. C. A. 356.
Restraining proceedings in federal courts. 45 C. C. A. 591.
Pendency of action in state or federal court as ground for abatement of action in the other. 47 C. C. A. 205; 73 C. C. A. 521.

STATES.
Federal jurisdiction in suit against state. 13 C. C. A. 165.
Estoppel against. 16 C. C. A. 353.
What are suits against states within the meaning of constitutional amendment eleven. 92 C. C. A. 25.

STATUTES.
Construction of statutes—State laws as rules of decision in federal courts. 11 C. C. A. 72.
Constitutional and statutory limitations of municipal indebtedness. 36 C. C. A. 6.
Statutory exemptions of building and loan associations from operation of usury laws. 36 C. C. A. 343.
Repeal of statutes by implication. 38 C. C. A. 136.
Power of Legislature to pass curative statutes. 39 C. C. A. 180.
Amendment of amended, repealed, or invalid statutes. 44 C. C. A. 590.
Effect of violation of statutes limiting speed of trains. 59 C. C. A. 5.
Construction of statutes as affected by mistakes in writing grammar, spelling, and punctuation. 65 C. C. A. 237.
History and passage of statutes and contemporary circumstances as aids to construction. 65 C. C. A. 535.
Pleading private statutes. 67 C. C. A. 241.

STATUTES—Cont'd.
Construction and operation of provisos, exceptions and saving clauses. 76 C. C. A. 381.
Validity of laws alleged to impair charter or franchise of corporation as dependent on reservation of power to alter or amend. 77 C. C. A. 281.
Statutory change of remedy as impairing obligation of contracts. 93 C. C. A. 281.

STOCKHOLDERS.
Liability to creditors of corporation. 23 C. C. A. 315; 33 C. C. A. 23.
Enforcement of statutory liability of stockholders in national banks. 52 C. C. A. 6.
Effect of judgment against corporation in action to enforce stockholder's liability. 52 C. C. A. 305.
Liability of transferrors and transferees of corporate stock for assessments. 61 C. C. A. 322.
Right of stockholders to sue or defend on behalf of corporation as dependent on refusal of corporation or officers to act. 87 C. C. A. 390.
Rights of minority stockholders as to management of corporate affairs. 89 C. C. A. 482.

STREET RAILROADS.
Care required of motormen. 40 C. C. A. 361.
Relative rights of street railroads, and vehicles and pedestrians in use and occupation of streets. 73 C. C. A. 12.

STRIKES. See Injunction.

SUBROGATION.
To rights of mortgagee. 42 C. C. A. 304.
Of insurer under assignment of rights of insured. 65 C. C. A. 615.

SUICIDE.
As a defense to a suit for life insurance. 16 C. C. A. 623; 28 C. C. A. 284.

SUNDAY.
As dies non juridicus. 12 C. C. A. 462.

SUPREME COURT.
Certiorari to circuit court of appeals. 1 C. C. A. 5.
Jurisdiction. 1 C. C. A. 9, 11.
Review of jurisdiction of circuit courts. 48 C. C. A. 351.

TARIFF LAWS.
Interpretation of commercial and trade terms. 18 C. C. A. 545.

TAXATION.
Of railroad land grants. 4 C. C. A. 196.
Of equitable title to public lands. 4 C. C. A. 196.

TAXATION—Cont'd.
Lands of the United States not subject to state taxation. 4 C. C. A. 196.
Due process of law. 8 C. C. A. 398.
Notice of equalization. 8 C. C. A. 400.
Forfeiture for nonpayment. 8 C. C. A. 401.
Regulation and taxation of interstate commerce by state. 8 C. C. A. 492; 24 C. C. A. 21.
Limitations of taxing power from mutual independence of federal and state governments. 23 C. C. A. 515.
Of foreign corporations. 24 C. C. A. 13.
Tax deed as color of title. 24 C. C. A. 402.
Of intangible property of nonresidents. 31 C. C. A. 467.
Persons entitled to injunction restraining or damages for wrongful enforcement of tax. 54 C. C. A. 550.
Of bank deposits. 60 C. C. A. 413.
Impairing obligation of contracts for exemption from taxation. 70 C. C. A. 294.
Place of taxation of property held in trust or other fiduciary capacity. 72 C. C. A. 283.
Restraining collection of taxes because of excessive or unequal assessments or valuations. 97 C. C. A. 16.

TELEGRAPHS AND TELEPHONES.
Measure of damages in actions against telegraph and telephone companies. 15 C. C. A. 235; 28 C. C. A. 59.
Damages for mental suffering from delay in delivering telegram. 11 C. C. A. 571; 15 C. C. A. 250; 28 C. C. A. 62.
Delay in transmission of message—Failure to disclose that line was not in working order. 14 C. C. A. 177.
Rights of telegraph and telephone companies to use of streets. 44 C. C. A. 155.
Notice and acceptance, by sender of message, of printed conditions on telegraph company's blanks. 89 C. C. A. 590.

TENANCY IN COMMON.
Rights of co-tenant as to improvements made under mistaken belief of perfect title. 69 C. C. A. 19.

TENDER.
Persons by whom tender may be made. 84 C. C. A. 428.

TERRITORIES.
Effect of acquisition of territory by United States on laws and property rights therein. 80 C. C. A. 457.

THREATENING POSTAL CARDS.
Nonmailable matter. 30 C. C. A. 94.

TITLE.
Rights of co-tenant as to improvements made under mistaken belief of perfect title. 69 C. C. A. 19.
Transfer of title as dependent on appropriation by seller. 83 C. C. A. 470.

TITLE INSURANCE. 19 C. C. A. 278.

TORTS.
Liabilities of carriers for negligence and torts of servants. 10 C. C. A. 466; 27 C. C. A. 651.
Of wife—Liability of husband. 12 C. C. A. 196.
Municipal liability for torts of public officers. 14 C. C. A. 534.
As affecting demurrage. 21 C. C. A. 345.
Maritime liens for torts. 34 C. C. A. 565.
Liability of corporation for torts. 39 C. C. A. 9.
Liability of principal for torts of agent. 43 C. C. A. 316.
Liabilities of charitable institutions for negligence. 47 C. C. A. 134.
Admiralty jurisdiction. 62 C. C. A. 279.
Effect of acquittal in criminal prosecution on liability in tort for alleged criminal act. 79 C. C. A. 407.

TRADE-MARKS AND TRADE-NAMES.
Contracts relating to use. 14 C. C. A. 104.
Assignment of right to use a person's name. 17 C. C. A. 579; 27 C. C. A. 360.
Right to use one's own name. 17 C. C. A. 579; 27 C. C. A. 357.
Use of corporate and firm names. 17 C. C. A. 579; 27 C. C. A. 357.
Use of geographical names. 17 C. C. A. 657; 35 C. C. A. 242.
Unfair competition. 20 C. C. A. 165; 30 C. C. A. 376.
Laches as a defense in suits for infringement. 22 C. C. A. 211; 36 C. C. A. 613.
Misleading or false labels. 29 C. C. A. 250; 97 C. C. A. 265.
Abandonment. 33 C. C. A. 294.
Arbitrary, descriptive, or fictitious character of trade-marks and trade-names. 50 C. C. A. 323.
Names of books or other publications as trade-marks or trade-names. 88 C. C. A. 601.
Restraining infringement of trade-mark or trade-name as dependent on knowledge or intent of infringer. 90 C. C. A. 4.

TRADE SECRETS.
Disclosure. 58 C. C. A. 8.

TRESPASS.
Rights of trespasser on train. 31 C. C. A. 76.
Liabilities of corporations. 39 C. C. A. 15.
Liability of railroads or street car companies for ejection of trespassers. 51 C. C. A. 578.
Negligence in ejecting trespasser under disability. 62 C. C. A. 422.
Care required of railroads as to trespassers on or near tracks. 97 C. C. A. 566.

TRIAL.
Jury trial in federal court. 5 C. C. A. 603; 26 C. C. A. 528; 27 C. C. A. 393.
Instructing jury and receiving verdict on Sunday. 12 C. C. A. 462.
Comments of counsel on failure to produce witness. 13 C. C. A. 589.
Trial by jury in criminal prosecutions. 39 C. C. A. 275.
Additional proofs in appellate court without trial de novo. 67 C. C. A. 600.
Operation and effect of motions by both plaintiff and defendant for direction of verdict. 77 C. C. A. 8.
Credibility of witnesses or parties testifying as question for jury. 88 C. C. A. 143.

TRUSTEES.
Citizenship as affecting the jurisdiction of the federal courts. 10 C. C. A. 252; 27 C. C. A. 300.
Right of trustee to purchase property directly from cestui que trust. 90 C. C. A. 110.

TRUSTS.
Assets of corporation when trust fund for creditors. 23 C. C. A. 315.
Place of taxation of property held in trust or other fiduciary capacity. 72 C. C. A. 283.
Fraud or other wrong in acquisition of real property as creating constructive trust. 94 C. C. A. 485.

UNITED STATES.
Estoppel against. 16 C. C. A. 353.
Assignment of claims and government contracts. 22 C. C. A. 650.
Nature and extent of power of United States to condemn property for public use. 70 C. C. A. 653.
Effect of acquisition of territory by United States on laws and property rights therein. 80 C. C. A. 457.

USURY.
Statutory exemptions of building and loan associations from operation of usury laws. 36 C. C. A. 343.
What law governs usury by building and loan associations. 51 C. C. A. 319.

VENDOR AND PURCHASER.
Marketable title. 40 C. C. A. 592.
Liabilities of venders of injurious substances or defective machinery and appliances for injuries to persons other than immediate vendees. 57 C. C. A. 5.
Right of vendor seeking specific performance of contract to have title perfected pending suit. 80 C. C. A. 354.
Deficiency judgments and personal liability on foreclosure of vendors' liens. 82 C. C. A. 488.
Necessary and proper parties in suits to foreclose or enforce vendors' liens. 83 C. C. A. 359.
Conditions and collateral agreements on execution or transfer of bills or notes as affecting bona fide purchasers. 95 C. C. A. 207.

WAIVER.
Of prepayment of insurance premiums. 13 C. C. A. 292.
Of maritime liens. 17 C. C. A. 102.
Of conditions of insurance. 27 C. C. A. 46.
Of defense by acceptance of premiums. 33 C. C A. 369.
Of trial by jury in criminal prosecutions. 39 C. C. A. 281.
Of right as to district in which suit may be brought. 52 C. C. A. 192; 87 C. C. A. 634.
Of right to remove cause to federal court. 66 C. C. A. 612.
Of objections to instructions in criminal prosecutions. 88 C. C. A. 302.

WAR.
The neutrality laws. 28 C. C. A. 622

WAREHOUSEMEN.
Liability of carriers as. 20 C. C. A. 529.

WATERS AND WATER COURSES.
Pollution of water courses. 37 C. C. A. 538.
Abandonment of water rights. 45 C. C. A. 190.

WIFE.
Death of husband by wrongful act—Damages. 1 C. C. A. 33.
Liability of husband for torts of. 12 C. C. A. 196.

WILLS.
Probate jurisdiction of federal courts, 36 C. C. A. 276.

WITNESSES.
Competency in federal courts—Following state practice. 5 C. C. A. 602; 21 C. C. A. 278.
Method of summoning — Following state practice. 5 C. C. A. 602.
Comments of counsel in argument on failure to produce. 13 C. C. A. 589.

WITNESSES—Cont'd.
Competency of, as to general reputation. 53 C. C. A. 109.
Misconduct of witness with reference to cause on trial as ground for impeachment. 71 C. C. A. 411.
Time for objection to competency of witness. 74 C. C. A. 3.
Impeachment and contradiction of party called as witness by adversary. 74 C. C. A. 142.
Excuses for disobedience of subpœnas. 76 C. C. A. 591.
Right of accused to be confronted by witnesses. 80 C. C. A. 116.
Impeachment of witness by evidence of statements, declarations, or admissions, showing bias or prejudice. 86 C. C. A. 593.
Credibility of witnesses or parties testifying as question for jury. 88 C. C. A. 143.

WITNESSES—Cont'd.
Right to require plaintiff in action for personal injuries to submit to physical examination. 93 C. C. A. 435.
Examination of witnesses by court. 95 C. C. A. 4.
Competency of witnesses attesting execution of deed. 95 C. C. A. 331.
Competency of physicians or surgeons to testify as to communications by patients or as to information acquired professionally as dependent on subject-matter. 97 C. C. A. 129.
Communications by or between persons having a common interest as privileged. 97 C. C. A. 340.

WRITS.
Form and service of process. 5 C. C. A. 594.
Issue and service on Sunday. 12 C. C. A. 462.

NOTES IN THIS VOLUME.

Page

Restraining Collection of Taxes Because of Excessive or Unequal Assessments or Valuations..... 16

Competency of Physicians or Surgeons to Testify as to Communications by Patients, or as to Information Acquired Professionally, as Dependent on Subject-Matter..... 129

Misleading or False Labels..... 265

Communications By or Between Persons Having a Common Interest as Privileged..... 340

Decisions of Courts as Authority in Other Co-ordinate Courts... 472

Care Required of Railroads as to Trespassers on or near Tracks.. 566

CASES

ARGUED AND DETERMINED

IN THE

UNITED STATES CIRCUIT COURTS OF APPEALS.

(173 Fed. 456.)

ATCHISON, T. & S. F. RY. CO. v. SULLIVAN, County Treasurer, et al.

(Circuit Court of Appeals, Eighth Circuit. September 23, 1909.)

1. TAXATION (§ 608*)—SYSTEMATIC OMISSION OR UNDERVALUATION—SUIT TO ENJOIN ILLEGAL TAX BASED THEREON.

A systematic, intentional, continuing omission or undervaluation of other taxable property, in violation of the Constitution or statute, by the taxing officers of a state or county, pursuant to a rule or practice adopted by them, the inevitable effect of which is an unjust discrimination in taxation against the property of complainant, and against other property similarly situated, will sustain a bill in equity in a national court to enjoin the collection of the tax based on the illegal discrimination.[1]

2. TAXATION (§ 608*)—ILLEGAL TAX—"ADEQUATE REMEDY AT LAW"—ACTION AT LAW NOT AS ADEQUATE AS SUIT IN EQUITY.

The adequate remedy at law, which will deprive a court of equity of jurisdiction, must be as certain, complete, prompt, and efficient to attain the ends of justice as the remedy in equity.

And in a case of this nature the payment of the illegal portion of the tax and the prosecution of an action at law to recover it back is neither as prompt, certain, complete, nor efficient a remedy as a suit for an injunction against its collection.

[Ed. Note.—For other cases, see Taxation, Cent. Dig. § 1238; Dec. Dig. § 608.*

For other definitions, see Words and Phrases, vol. 1, pp. 182–183.]

3. TAXATION (§ 608*)—ACTUAL INTENT TO DISCRIMINATE NOT ESSENTIAL—LAW PRESUMES IT FROM EFFECT OF ACTS.

The law presumes that every man intends the natural and inevitable effect of his deeds, and that taxing officers who intentionally omit or undervalue other taxable property in violation of the Constitution or the statute, so that an undue share of the burden of taxation is necessarily

---

[1] See note at end of case.

thrown upon the property of complainant, intended to discriminate against its property. It is not necessary to its cause of action that the officers should have had any such actual intention, for their acts were as injurious and as remediable without as with that intention.

[Ed. Note.—For other cases, see Taxation, Cent. Dig. § 1234; Dec. Dig. § 608.*]

4. TAXATION (§ 611*)—ESTOPPEL—ADMISSION THAT ASSESSMENT IS ERRONEOUS ESTOPS FROM INVOKING CONTRARY PRESUMPTION.

Parties to a suit who admit in their pleadings that the actual value of property was far in excess of its assessed value are estopped from invoking, to sustain the assessment, the rule that where the determination of an issue of fact, like the valuation of property for taxation, is intrusted by statute to the judgment of an officer or a board, his or its decision raises more than a presumption of fact, and may not be overthrown by the testimony of two or three witnesses.

[Ed. Note.—For other cases, see Taxation, Cent. Dig. § 1252; Dec. Dig. § 611.*]

5. EVIDENCE (§ 215*)—REPORT FOR TAXATION COMPETENT EVIDENCE AGAINST MAKER IN SUIT TO ENJOIN TAX—REPORT TO INTERSTATE COMMERCE COMMISSION FOR OTHER PURPOSES INCOMPETENT.

A report made by a railway company to taxing officers in pursuance of the requirement of a state statute, for the purpose of aiding the officers in properly assessing its property, is competent evidence against it of the facts stated therein, in a suit by it to enjoin the collection of taxes levied upon an assessment based upon the report.

But a report of the company to the Interstate Commerce Commission, covering a period of time other than that on which the statute required the assessment to be based, and not made for taxation, is not competent evidence against it in such a suit.

[Ed. Note.—For other cases, see Evidence, Cent. Dig. §§ 754–759; Dec. Dig. § 215.*]

6. EVIDENCE (§§ 241, 246*) — ADMISSIONS OF AGENTS AND ATTORNEYS IN ONE SUIT NOT COMPETENT EVIDENCE AGAINST PRINCIPALS IN ANOTHER INVOLVING DIFFERENT ISSUES.

The admissions of agents and attorneys authorized to act in a suit or legal proceeding estop their principals therein; but they are not competent evidence against the latter in another suit or legal proceeding in which different issues are involved.

[Ed. Note.—For other cases, see Evidence, Cent. Dig. §§ 887, 945, 946; Dec. Dig. §§ 241, 246.*]

7. TAXATION (§ 390*)—MARKET VALUE OF BONDS AND STOCK, AND GROSS EARNINGS AND NET EARNINGS, MORE PERSUASIVE EVIDENCE OF VALUE OF RAILROAD PROPERTY THAN COST OF PRODUCTION OF TANGIBLE PROPERTY.

Where the basis of assessing the property of a railroad company in a state for taxation prescribed by statute and followed is to ascertain the value of its corporate plant used or convenient for operating its railroad, wherever situated, excluding its property not necessary or convenient for that purpose which is otherwise assessed, and then to take such a portion of that value as the number of miles of its main track in the state bears to the number of miles of its entire main track, the current cash value of all the obligations which constitute its funded debt, and of all its outstanding shares of stock, are competent evidence of the value of its corporate plant, and, in connection with its entire mileage and its mileage in the state, more persuasive evidence of the value of that part of its corporate plant in the state, than the cost of reproduction of its tangible property therein.

[Ed. Note.—For other cases, see Taxation, Cent. Dig. § 653; Dec. Dig. § 390.*]

8. TAXATION (§ 390*)—PRESUMPTION IS THAT ALL PROPERTY OF RAILROAD COMPANY IS HELD FOR RAILROAD USE, AND THAT VALUE IS DISTRIBUTED THROUGHOUT MILEAGE—EVIDENCE TO CONTRARY COMPETENT.

Evidence of the value of property not necessary for railroad purposes, and that parts of the corporate plant of a railroad company, including its various terminals, are of exceptional value, is competent, and, when offered, must be given effect by the assessing board and by the court in ascertaining the value of its corporate plant in the state.

But in the absence of such evidence the presumption is that all its property is part of its corporate plant, and that its tangible and intangible property are equally distributed throughout its mileage.

[Ed. Note.—For other cases, see Taxation, Cent. Dig. § 653; Dec. Dig. § 390.*]

9. TAXATION (§ 390*)—VALUATION OF RAILROAD—INTANGIBLE PROPERTY COMBINED WITH AND DISTRIBUTED TO EVERY PART OF TANGIBLE PLANT.

The intangible property of an operating railroad company, its franchises, contracts, privileges, and good will, are presumptively combined unavoidably and inextricably with, automatically distributed to, and they enhance the value of, every part of its tangible corporate plant.

[Ed. Note.—For other cases, see Taxation, Cent. Dig. § 653; Dec. Dig. § 390.*]

10. TAXATION (§ 608*)—RESULTING LEGAL INJURY ESSENTIAL TO RELIEF FROM UNDERASSESSMENT.

Where the property of the complainant and of others whose property is subject to a like levy for taxation is illegally underassessed to substantially the same extent, the complainant is entitled to no relief. Resulting legal injury, continuing or threatening, is as essential to relief in equity as causal wrong.

[Ed. Note.—For other cases, see Taxation, Cent. Dig. §§ 1233, 1234; Dec. Dig. § 608.*]

11. TAXATION (§ 100*)—LIVE STOCK—CONSTRUCTION OF SECTION 3927t, COLORADO STATUTES.

Under section 3927t, Mills' Ann. St. Rev. Supp. Colo., live stock brought into a county between September 1st and December 31st of one year, and shipped out between January 1st and April 1st of the succeeding year, is taxable in that county for the latter year.

[Ed. Note.—For other cases, see Taxation, Cent. Dig. § 201; Dec. Dig. § 100.*]

(Syllabus by the Court.)

Appeal from the Circuit Court of the United States for the District of Colorado.

Bill by the Atchison, Topeka & Santa Fé Railway Company against John R. Sullivan, Treasurer of Bent County, Colo., and others. From a decree dismissing the bill, complainant appeals. Reversed.

Henry T. Rogers and Gardiner Lathrop (Daniel B. Ellis, Lewis B. Johnson, Pierpont Fuller, and George A. H. Fraser, on the brief), for appellant.

Jesse G. Northcutt and Allen M. Lambright (A. Watson McHendrie, on the brief), for appellees.

Before SANBORN, Circuit Judge, and CARLAND and POLLOCK, District Judges.

SANBORN, Circuit Judge. This is an appeal from a decree which dismissed a bill in equity, exhibited to prevent the treasurer of Bent

county, in the state of Colorado, from collecting of the complainant taxes which it alleged were illegal and excessive. The Constitution of that state required taxes to be uniform upon the same class of subjects (article 10, § 3), and the statutes required all taxable property to be assessed at its full cash value. The State Board of Equalization was required to assess the railroad property of each railroad company in the state as a unit and to apportion the assessment to the counties of the state on a mileage basis, the assessor of each county was required to assess other taxable property in his county, and these two assessments were placed upon the tax lists and subjected to the same levies. Mills' Ann. St. Rev. Supp. §§ 3764, 3895, 3918, 3920.

The gravamen of the bill was (1) that while the complainant's property in Bent county in 1905 was not worth more than $25,000 per mile and the State Board assessed it $14,800 per mile, or 55 per cent. of its value, the assessor of Bent county assessed other taxable property in that county at not more than 25 per cent. of its actual value; that this assessor omitted from his assessment all credits, all watches, clocks, and jewelry, and much other property taxable in that county, with the knowledge and consent of the other county officials; that he did so pursuant to a rule adopted by the county officers, and did so systematically and intentionally, in order to make the complainant pay a larger tax in proportion to the value of its property than others who had taxable property in that county would pay; and (2) that the State Board transmitted to the county an assessed value of $14,800 per mile of complainant's railroad, when the proportion of the assessed value of its property in the state which the board was required by the statutes to certify to that county was $14,385.28 per mile.

The treasurer of the county admitted by his answer that the assessed value certified to the county by the State Board was excessive to the amount of $414.72 per mile, as averred in the second complaint recited above, and the effect of this admission was that the complainant's tax was excessive on this account to the amount of $676.78. The treasurer denied that the assessor of Bent county knowingly or willfully omitted to assess credits, watches, jewelry, and other property; but he did not deny, and hence he admitted, that the assessor did omit to assess them. He denied that the assessor assessed the property in his county "so low as 25 per cent. of its actual cash value," and hence he admitted that the assessor did assess it as low as 26 per cent. of its actual value. He denied that the assessor made the omissions and the low assessment in collusion with the county commissioners, or systematically, or with intent to impose an undue burden of taxation upon the complainant, and he averred that the county officers discharged their duties in good faith to the best of their judgment and ability. He admitted that the State Board assessed the complainant's property in Bent county at $14,800 per mile, but denied that it was assessed any higher in proportion to its actual value than other property in Bent county was.

The complainant introduced evidence which tended to prove systematic omissions and undervaluations by the assessor, and to avoid the effect of that evidence the treasurer invoked the rule that where

the determination of an issue of fact, or of mixed law and fact, like that relative to the valuation of property for taxation, is intrusted by law to the judgment of an officer or board, his or its decision raises something more than the mere presumption of fact, and it may not be overthrown without more than the testimony of two or three witnesses to the contrary. Pittsburg, Cincinnati, Chicago & St. Louis Ry. Co. v. Backus, 154 U. S. 421, 435, 436, 14 Sup. Ct. 1114, 38 L. Ed. 1031; Adams Express Company v. Ohio State Auditor, 165 U. S. 194, 229, 17 Sup. Ct. 305, 41 L. Ed. 683. The treasurer introduced evidence which tended to show that the actual value of complainant's property in Bent county was more than $25,000 per mile, and to avoid the effect of that evidence the complainant invoked the same rule; but each party was estopped by his pleading from availing himself of the benefit of this rule in the case in hand. The treasurer could not rely upon it to sustain the assessment of the county assessor, because he had admitted in his pleading that his assessment was only 26 per cent. of the actual value of the property. The complainant could not invoke it successfully to sustain the assessment of its property in Bent county at only $14,800 per mile by the board, because it had admitted in its complaint that the actual value of its property was $25,000 per mile. The rule is inapplicable to this case, and its consideration is here dismissed.

Counsel for the complainant argue that the treasurer admitted by his answer that the board assessed its property at its actual cash value; but a careful analysis of the answer has convinced that the fair and true construction of it is that the treasurer admitted that the board assessed that property $14,800 per mile, but averred that it was worth more than $25,000 per mile, and that it was not assessed higher in proportion to its actual value than was the other taxable property in the county.

The statutes required the board to assess the railroad property, and they required the assessor to assess the other taxable property in the county, at its actual value. They were required to assess the property within their respective jurisdictions independently, without conference or consultation with each other, at times when they could not know that either had made or would make an assessment on any other than the lawful basis, the basis of the actual value of the property. The only safeguard against injustice, the only surety for impartiality and uniformity, at this point in the taxing proceedings, was assessments at the actual value of the property. For, if either the board or the assessor varied from this standard, the assessments could seldom fail to be partial and unjust. In the absence of all evidence, the pleadings alone establish the facts that the assessor disregarded this law and assessed the taxable property subject to his jurisdiction at 26 per cent. of its actual value, and that the board disregarded the law and assessed the property within its jurisdiction at less than 60 per cent. of its actual value. In this state of the law and of the pleadings, the assessments, though competent, were not even persuasive, evidence of the actual value of any of the property, nor of uniformity of assessment, and these issues were open to proof by the preponderance of other evidence.

The evidence relative to these matters is voluminous, and a digest or review of it here would be useless. Suffice it to say that it satisfactorily establishes these facts: The assessor of Bent county omitted to assess watches, clocks, jewelry, credits, and more than 100,000 sheep taxable in his county. He assessed the taxable property which he did list at between 25 per cent. and 33⅓ per cent. of its actual value. The evidence does not disclose more accurately the exact per cent. which his assessment was of the real value of the property he assessed. The county commissioners of the county of Bent knew that he had made his assessment at about 33⅓ per cent. of the actual value of the property he listed, and that he had omitted some of the taxable property, and they silently acquiesced in this course. It was, and had been for many years, the rule and the settled policy and practice of these local taxing officers to violate the law and assess the taxable property in that county within their jurisdiction at about one-third of its actual value. The assessor actually intended to assess the property he listed upon that basis. He testified, however, and the truth of this statement must be conceded, that he did not have any actual intent or purpose to impose an undue burden upon the complainant or upon railroad property. His acts, nevertheless, were in violation of the statute, their natural and inevitable effect was to diminish the burden of taxation upon the property within his jurisdiction and to increase it upon the railroad property, and, however innocent in actual intent he may have been, his acts were as injurious to the owners of railroad property as if he had actually intended to discriminate against them, and the law conclusively presumes that he intended the natural and inevitable effect of his deeds. It was not necessary to the complainant's cause of action that the assessor or the county commissioners should have had any actual intention to increase unduly the complainant's share of the burden of taxation. It was sufficient to sustain its cause that they intended to disregard the law, and that the natural and inevitable effect of that violation was the increase of its share of the burden. Taylor v. Louisville & N. R. Co., 31 C. C. A. 537, 559, 88 Fed. 350, 372.

These facts leave no doubt that the taxing officers of Bent county adopted a rule pursuant to which they systematically and intentionally grossly underassessed the property of that county within their jurisdiction, with the legal intent unlawfully to diminish the burden of taxation upon property in that county other than railroad property, and to increase the burden of taxation upon railroad property; and if this were the whole case the complainant would be entitled to relief from the unlawful portion of this burden. A systematic and intentional under or over assessment of one or more classes of property in violation of the law, whereby one or more classes of property is to be made to bear an undue proportion of the burden of taxation, presents a good cause of action for relief from the payment of the unjust part of the proposed tax. Taylor v. Louisville & N. R. Co., 88 Fed. 350, 372, 31 C. C. A. 537, 559; Cummings v. National Bank, 101 U. S. 153, 158, 25 L. Ed. 903; Raymond v. Chicago Traction Co., 207 U. S. 20, 37, 38, 28 Sup. Ct. 7, 52 L. Ed. 78; Pittsburgh, Cincinnati, Chicago & St. Louis R. Co. v. Backus, 154 U. S. 421, 425, 435, 14 Sup. Ct. 1114, 38 L. Ed. 1031.

But the treasurer alleged, and the court below found, that while the property in Bent county other than the railroad property was grossly undervalued, the property of the railroad company was also underassessed in substantially the same proportion, so that the complainant suffered no real injury by the former undervaluation. This finding is assailed by counsel for the railway company on the grounds: (a) That the defendant admitted in his answer that the $14,800 per mile at which the board assessed its property was its actual value; (b) that the legal presumption that the board's assessment was according to law establishes the fact that $14,800 per mile was its actual value; and (c) that there was no competent and no sufficient evidence that its value was more than this amount. The first two grounds have been considered and held untenable—the first because the true construction of the answer does not disclose the admission claimed, and the second because the admission in the bill that the complainant's property was worth $25,000, when the board assessed it at $14,800, estopped the complainant from asserting that the board assessed its property at its actual value, and opened the issue of that value to proof by any competent evidence.

Was there any competent evidence that the value of this property was more than $25,000 per mile? The statutes of Colorado required the Board of Equalization to assess the property in that state of a railroad company held for railroad purposes, excluding its property not necessary or convenient for those purposes which was otherwise assessed, on the basis of the unit of use, to determine the true value of its corporate plant or profit-producing unit, whether a part or all of it was situated in that state, to ascertain the total number of miles of its railroad track wherever situated, the total number of miles in the state and in each county in the state, and then, after giving due consideration to the relative values of different portions of the corporate plant and of the franchises appurtenant thereto, and all other competent evidence and just considerations relative to the value of the plant and its various parts, to ascertain the value of the part of the corporate plant in Colorado, and in each county in that state, in the light of all these considerations and all this evidence, upon the theory that, in the absence of countervailing considerations or evidence, the value of that part of the company's profit-producing unit in the state would be that proportion of the value of its entire corporate plant which the number of miles of its railroad in the state bore to its entire mileage, and that the value of that part of its railroad property in each county would be that proportion of the value of its corporate plant in the state that its number of miles in the county bore to its number of miles in the state. Sections 3918 and 3920. This method of assessment has been repeatedly sustained by the Supreme Court. Pittsburg, C., C. & St. L. R. R. Co. v. Backus, 154 U. S. 421, 428, 429, 430, 14 Sup. Ct. 1114, 38 L. Ed. 1031; Adams Exp. Co. v. Ohio State Auditor, 166 U. S. 185, 220, 221, 222, 224, 17 Sup. Ct. 604, 41 L. Ed. 965; Adams Exp. Co. v. Ohio State Auditor, 165 U. S. 194, 197, 221, 17 Sup. Ct. 305, 41 L. Ed. 683.

The statutes required as a basis for this assessment that each railway company owning, controlling, or operating any railroad in the state

should furnish the board and should file with its clerk a statement, verified by one of its general officers, showing for the year ending December 31st preceding—in this case, for the year ending December 31, 1904—among other things, (1) the whole number of miles of main track operated or controlled by the company, as well that without as within the state; (2) the whole number of miles of such track within the state; and (3) the amount of money and other cash items, the number of shares of the capital stock of the corporation outstanding and the average market value thereof during the year for which the statement is made, the total amount and market value of mortgage bonds or other incumbrance upon the property of such corporation and the rate of interest, and the gross earnings and the net earnings of the corporation during the year. Section 3907. The complainant made and filed such a statement with the board a short time before the assessment of this property was made, and this statement was introduced in evidence at the hearing below. It was competent evidence of the value of the property of the complainant, because it was the complainant's admission against interest, made pursuant to the requirement of the statute, for the purpose of enabling the taxing officers to ascertain the true value of its property.

We lay out of consideration here a report of the complainant to the Interstate Commerce Commission for the year ending June 30, 1905, which was introduced in evidence by the defendant, because there is no proof that the assistant to the president and the assistant general auditor, who appear to have made that report, were empowered by the railway company to make any statement or admission on its behalf in the matter of the taxation of its property, and the statements of agents and attorneys authorized to act and admit for their principals in one suit, litigation, or legal proceeding are not admissible against their principals in another such suit or proceeding, in which different issues are involved, without proof of their authority to act and admit in the latter suit or proceeding (Miller v. United States, 66 C. C. A. 399, 413, 133 Fed. 337, 351; Stone v. Bank of Commerce, 174 U. S. 412, 421, 19 Sup. Ct. 747, 43 L. Ed. 1028; Horseshoe Mining Company v. Miners' Ore Sampling Co., 77 C. C. A. 213, 214, 147 Fed. 517, 518; New York Life Ins. Co. v. Rankin, 162 Fed. 103, 108, 89 C. C. A. 103), and because this report does not cover the period of time upon which the valuation for taxation was required to be based, and it was not made for that purpose in pursuance of any statute or otherwise.

The report of the complainant to the State Board for the purpose of its taxation shows that the whole number of miles of railroad owned by it on July 1, 1904, was 8,119.04, and that the average funded debt upon these 8,119.04 miles was $29,175.92 per mile. There is undisputed testimony in the record before us to the effect that during the year 1904 the average market value of the preferred stock of the company was above its par value, and that the market value of its common stock was from $75 to $90 per share. The report shows that there were 1,020,000 shares of common stock and 1,141,195 shares of preferred stock outstanding. Reckoning the common stock at $75 per share, its market value was $76,500,000, and reckoning the value of the pre-

ferred stock at par, it was worth $114,199,530, and the total market value of the preferred and the common stock was $190,699,530, or $23,488 per mile, subject to the funded debt of $29,175.99 per mile. Upon this basis the value of the railroad was $52,663.92 per mile. The report of the complainant to the board also shows that its earnings for the year ending June 30, 1904, from operation, were sufficient to pay the expenses of operation, taxes, interest on its entire funded debt, and a dividend of 5 per cent. on its preferred stock and 4 per cent. on its common stock, and to leave a surplus of more than $1,000,000. To all this evidence counsel for the company urge many objections. They say that the valuation of the railroad upon this basis includes the value of three railroads other than that owned by the complainant. But the entire 8,119.04 miles were reported by the complainant to be owned by it, and they were operated by it and were a part of its profit-producing plant, which the state lawfully makes the basis of valuation, although there may have been other railroad companies than the complainant which were owned or controlled by it and were engaged in the operation.

They complain because the market value of the stock and bonds includes the value of the franchises of the company and of its right to conduct interstate commerce. The right to carry on interstate commerce is exercised by the company within as well as without the state of Colorado, and is appurtenant to each mile of its railroad wherever situated, and the tax levied upon the assessment made upon the mileage basis is not a tax upon interstate commerce; but it is a tax upon the property of the company in the state. Postal Telegraph Cable Co. v. Adams, 155 U. S. 688, 697, 698, 15 Sup. Ct. 268, 360, 39 L. Ed. 311; Adams Express Co. v. Ohio State Auditor, 165 U. S. 195, 220, 226, 17 Sup. Ct. 305, 41 L. Ed. 683. It is true that the current cash value of the whole funded debt and of the entire stock of a railroad company shows what, in the opinion of those who own and deal in its securities and who are perhaps best able to judge, the value of all the property of the company is, and that this value includes all the tangible and all the intangible property of the company, all its corporate franchises, all its privileges and contracts, and all its good will. State Railroad Tax Cases, 92 U. S. 575, 605, 23 L. Ed. 663; Pittsburg, Cincinnati, Chicago & St. Louis R. Co. v. Backus, 154 U. S. 421, 429, 14 Sup. Ct. 1114, 38 L. Ed. 1031; Adams Express Company v. Ohio State Auditor, 166 U. S. 185, 221, 222, 17 Sup. Ct. 604, 41 L. Ed. 965. But all the tangible property convenient for railroad purposes, the roadbed, the rails, the ties, the station houses, is combined unavoidably and inextricably with the intangible property, with the franchises, privileges, and contracts of the corporation into a single corporate plant, a single profit-producing unit used for railroad purposes. This intangible property unavoidably and automatically distributes itself wherever the tangible property is, and it enhances the value of every part of it. There are 26 miles of the complainant's railroad in Bent county. There is uncontradicted evidence that this part of the railroad, excluding rolling stock and shop machinery, could be reproduced for from $20,000 to $21,000 per mile; but this part of

the complainant's railroad, separate from the system or from the operating unit of which it is a component portion, would be worth far less than it now is, because the franchise of the complainant to be, its franchise to do, its privilege to carry on, interstate commerce, all its franchises and privileges and its good will, are appurtenant to this portion of its railroad, are exercised to operate it, and become a part of its value. Adams Express Company v. Ohio State Auditor, 166 U. S. 185, 221, 222, 223, 224, 17 Sup. Ct. 604, 41 L. Ed. 965.

Counsel for the company insist that the current cash value of the stock and bonds is an erroneous and misleading fact from which to deduce the value of the company's railroad property in Colorado, because the portions of its railroad in some more populous states are of greater value per mile than the part of its railroad in Colorado. It is undoubtedly a fact that there must be this difference in value of the separate parts of the railroad. But this difference in value exists in the case of every other corporation which has been or is assessed upon the mileage basis according to the rule of the unit of use, and notwithstanding this fact that rule probably presents the best, and it certainly presents a lawful, method of ascertaining the value of such property for assessment, when the board or court which is finding the value gives due consideration and effect to considerations and evidence relative to the value of the entire corporate plant, relative to the value of that part of the company's property not included within the plant, which must be deducted from the value of its entire property, and to considerations and evidence relative to the value of different parts of the corporate plant and of the franchises appurtenant thereto; and in view of this fact the market value of the stock and bonds must be competent and persuasive evidence from which to ascertain the value of the railroad in the state of Colorado, or in any other state.

Counsel contend that the market value of the stock and bonds is a misleading fact from which to deduce the value of the railroad property in Colorado, because the complainant has other property than that used for railroad purposes, the value of which should be deducted from the market value of the stock and bonds, and because the company has more valuable terminals at Chicago, Kansas City, Galveston, Los Angeles, and San Francisco than it has in the state of Colorado; but there is no competent evidence in the record of the amount and value of the property which the complainant owned in the year 1904 that was not a part of the profit-producing unit, nor of the value of complainant's terminals outside of Colorado or within that state. The company was called upon in accordance with the statute to make a return of its corporate plant as a basis for the assessment of its property. It made that return, and it has been introduced in evidence in this case. The presumption is, in the absence of evidence to the contrary, that a railroad company holds all its property for railroad uses, and that the value of the stock and bonds stated in the return indicates the value of the complainant's property held for those purposes. If it had accumulated property that it was not using or holding for such purposes, or if its case was one of those exceptional cases wherein some parts of its railroad in other states were of extraordinary value,

it would have been competent for it to have proved that fact at the hearing below. In the absence of any such proof, the legal presumption must prevail, and the market value of its stock and bonds, divided by the number of the miles of its railroad, must be substantial evidence of the value of its railroad per mile in the state of Colorado and in the county of Bent. Adams Express Company v. Ohio State Auditor, 165 U. S. 194, 227, 17 Sup. Ct. 305, 41 L. Ed. 683; Adams Express Company v. Ohio State Auditor, 166 U. S. 185, 222, 223, 17 Sup. Ct. 604, 41 L. Ed. 965; Pittsburg, Cincinnati, Chicago & St. Louis R. Co. v. Backus, 154 U. S. 421, 430, 14 Sup. Ct. 1114, 38 L. Ed. 1031.

The result is that this record contains the evidence of two witnesses that the cost of reproduction of that part of the complainant's railroad in Colorado in 1904, exclusive of rolling stock and shop machinery, would have been about $20,000 per mile on the one hand, and on the other hand evidence of the gross earnings and of the net earnings of the entire corporate plant of the company for the year ending June 30, 1904, and of the current cash value of the obligations evidencing the funded debt, and of the stock of the company during that year, to the effect that the value of the complainant's corporate plant or profit-producing unit; and hence, under the statutory and legal rule for its assessment for taxation on a mileage basis, the value of that part of its plant in Colorado was about $52,663.92 per mile. The assessment made by the board, $14,500 per mile, was 28 per cent. of this value. The gross and net earnings and the current cash value of the obligations which evidence the funded debt and of the stocks of a railroad company are neither exclusive nor conclusive evidence of the value of its railroad property, or of the part of its profit-producing unit in any state. But they are competent and more persuasive evidence of such value than the mere cost of reproducing the tangible property which constitutes the railroad, or any part of it, because this cost of reproduction excludes the value of the intangible property of the company, of its good will, its franchises, its privileges, and its contracts, which is sometimes greater than the value of its tangible property (Adams Express Company v. Ohio State Auditor, 165 U. S. 194, 220, 221, 223, 224, 17 Sup. Ct. 305, 41 L. Ed. 683), and because those who actually buy, sell, and own the stocks and bonds of a railroad company are generally better qualified than strangers to form correct opinions of the value of its property, and the current market value of all these securities is very persuasive proof of their estimate of the value of the property of the company (State Railroad Tax Cases, 92 U. S. 575, 605, 23 L. Ed. 663; Pittsburg, Cincinnati, Chicago & St. Louis Ry. Co. v. Backus, 154 U. S. 421, 14 Sup. Ct. 1114, 38 L. Ed. 1031).

When to these facts are added the presumptions that, in the absence of countervailing evidence, all the property of a railroad company is held by it for railroad uses, and that the value of one part of it may be fairly estimated by taking that part of the value of its corporate plant which is measured by the proportion of the length of the particular part to that of the whole railroad (Adams Express Company v. Ohio State Auditor, 166 U. S. 185, 223, 17 Sup. Ct. 604, 41 L. Ed. 965; State Railroad Tax Cases, 92 U. S. 575, 611, 23 L. Ed. 663;

Pittsburg, Cincinnati, Chicago & St. Louis Ry. Co. v. Backus, 154 U. S. 421, 430, 14 Sup. Ct. 1114, 38 L. Ed. 1031), and the fact that the gross and net earnings of the corporate plant for a considerable time preceding the date of the valuation were ample, after paying expenses of maintenance, operation, and reasonable betterments, to pay reasonable interest on the current cash value of all the outstanding stock and of all the bonds and other obligations of the company, this evidence becomes too persuasive to be overcome by testimony of the mere cost of reproducing the tangible structure, consisting of right of way, roadbed, ties, rails, station houses, and other improvements which form a part of the railroad.

The evidence is then convincing that the Board of Equalization assessed the property of the complainant in Bent county at about 28 per cent. of its cash value, and that the other taxable property in that county which was assessed at all was assessed at about the same per cent. of its value. It fails to sustain the claim of the complainant that its property was assessed at a higher proportion of its value than was the other property which was assessed in that county. The complainant, therefore, has suffered and can suffer no injustice, it has sustained and can sustain no injury, by the gross underassessment by the assessor of Bent county of the property within his jurisdiction, and it is entitled to no relief on that account. Courts of equity may not right wrongs at the suit of those who have not suffered from them. Resulting legal injury, continuing or threatening, is as essential to relief in equity as causal wrong. Darragh v. H. Wetter Mfg. Co., 23 C. C. A. 609, 619, 78 Fed. 7, 16; People's United States Bank v. Gilson, 88 C. C. A. 332, 338, 161 Fed. 286, 292.

After the assessments had been made, the complainant filed a petition for an equalization of them, and it complains, and the defendant denies, that the Board of Equalization unlawfully refused to give it a hearing and confirmed the assessments as they were originally made. As, however, these assessments were substantially uniform, and as the complainant can suffer no injustice or injury on account of the basis upon which they were made, this issue has become immaterial, and it is here dismissed.

There remain for consideration the omissions by the assessor of taxable property from his assessment. The evidence is conclusive that he omitted all watches, clocks, and jewelry, all credits, and all fat sheep and cattle, that the average bank deposits in that county during the year 1905 amounted to $230,000, and the weight of the evidence is that there were about 131,755 fat sheep in the county between January 1, 1905, and April 1, 1905, a small part of which remained in the county on and after the latter date. The general rule was that, except as otherwise provided, personal property should be assessed in the county where it was on the 1st day of April in each year. Section 3873. But it was provided by section 3927t: (a) That it should be lawful for the assessor to assess cattle, sheep, and horses as of any date between the 1st day of January and the 31st day of December of the year in which the assessment was made—in this case of the year 1905; (b) that when any live stock was driven into the county, for the purpose of grazing

therein, it should be liable to be assessed for all taxes leviable for the year in which it was driven into the county; (c) that any stock brought into the state between April 1st and September 1st in each year, and removed from the county to which it was brought before one year had elapsed, should be subject to taxation for the year in which it was brought into the state, but that stock brought in between those dates and kept in the county more than a year should be exempt from taxation for the year in which it was introduced into the state, and should be subject to taxation thereafter; and (d) that all stock brought into the state after September 1st and before December 31st of the same year should be exempt from taxation for that year. The omitted sheep, with perhaps a few exceptions, were brought into the county between the 1st of September and the 31st of December of the year 1904. This assessment was for the year 1905.

Clauses "b," "c," and "d," above, so far as they concern the assessment of these sheep, relate exclusively to their assessment for the year 1904, the year in which they were introduced into the county, and they have no relevancy to their assessment in 1905, except that they clearly show that it was the purpose and policy of the state to assess live stock brought into a county to be fed when it was removed therefrom within a year thereafter, although it did not happen to be in the county on the 1st day of April in any year. Thus under (a) live stock driven into the county for grazing is presumably introduced after April 1st, but it is taxable for that year nevertheless. Under (b) stock brought in after April 1st and before September 1st and shipped out before the succeeding April is taxable for the year of its introduction. But under (d) stock brought in after September 1st is not taxable for that year. This stock, therefore, was not taxable for the year 1904. Unless it was assessed for the year 1905, it would escape taxation in that county altogether. The statute expressly empowered the assessor to assess these sheep as of any date between January 1 and April 1, 1905, and in view of the policy of the state exhibited by these statutes to assess all live stock brought into a county, whether it was there on April 1st or not, the grant of this power must be deemed to have imposed upon the assessor a corresponding duty to make the assessment. The Constitution of the state required this property to be assessed, and it required taxes to be levied, under general laws (article 10, § 3), and the Legislature never intended that the assessment and taxation of this property should be left discretionary with the assessor. The statute required him to assess these sheep.

The evidence is conclusive that he so understood his duty, but that he and the other county officers intentionally omitted this property from the assessment pursuant to a rule and practice of the assessors and county commissioners of that county which had long prevailed to assess and tax no fat stock therein, because they wished to encourage the industry of feeding this stock in their county in order to provide a market for hay and to make general business prosperous in their community. The injustice of this rule and practice to the railroad company is demonstrated by the fact that the whole number of fat sheep in the county in the spring of 1905 was about 131,755, and their value at

the rate applied by the assessor to other property for the purposes of assessment would have been about $223,983.50, while the whole number of sheep he actually assessed was only 25,515, at a valuation of $43,416, and if these fat sheep had been assessed at the valuation above stated the complainant's tax would have been reduced about $3,000.

Counsel for the defendant argue that the complainant is estopped from claiming any reduction of its tax on account of the omission of these sheep, because at some prior time the county attorney had a conversation with the vice president of the railway company, and he testified, "Just what was said I don't remember, but we came away with the impression that it would be very satisfactory to his department to omit them from taxation in order to encourage the industry," and because the number and the value of the taxable sheep omitted were much less than those stated. The alleged estoppel was not established, because there was no proof that the vice president of the company had any authority from it to consent that the assessor should disregard the law, and the testimony was too indefinite to satisfy that he ever gave any such consent.

The testimony does not prove the number and value of the taxable sheep omitted beyond a reasonable doubt; but it establishes their number and their value by a fair preponderance of the evidence. Moreover, there is conclusive evidence that there were deposits in the banks to the amount of $230,000, there is evidence that not more than half of the credits thus evidenced could probably have been offset by debts of the depositors, there must have been other credits besides bank deposits, and there must have been watches and clocks that were taxable in this county. In view of all these facts, and of the admitted fact that the complainant is entitled to a reduction from its tax of $676.78 on account of the excessive assessment certified to the county by the Board of Equalization, it is certain that no injustice will be done to the county by a reduction of the tax of the complainant in the sum of $3,580, and that in justice and in equity the complainant is entitled to a reduction of at least that amount.

Finally, counsel for the defendant invoke the conceded rule that some recognized ground of equity jurisdiction, and the fact that the complainant has no adequate remedy at law, in addition to the fact that the tax is excessive and illegal, are essential to the maintenance of a suit in equity for injunctive relief, and they insist that no such foundation for this suit has been laid by the proof. Dows v. City of Chicago, 11 Wall. 108, 20 L. Ed. 65; Hannewinkle v. Georgetown, 15 Wall. 547, 21 L. Ed. 231; Union Pacific Railway Co. v. Cheyenne, 113 U. S. 516, 5 Sup. Ct. 601, 28 L. Ed. 1098; Shelton v. Platt, 139 U. S. 591, 11 Sup. Ct. 646, 35 L. Ed. 273; State Railroad Tax Cases, 92 U. S. 575, 613, 614, 23 L. Ed. 663; Allen v. Pullman's Palace Car Co., 139 U. S. 658, 661, 11 Sup. Ct. 682, 35 L. Ed. 303; Pacific Express Co. v. Seibert, 142 U. S. 339, 12 Sup. Ct. 250, 35 L. Ed. 1035; Ogden City v. Armstrong, 168 U. S. 224, 236, 18 Sup. Ct. 98, 42 L. Ed. 444; Albuquerque Bank v. Perea, 147 U. S. 87, 13 Sup. Ct. 194, 37 L. Ed. 91; Coulter v. Louisville & Nashville Ry. Co., 196 U. S.

599, 609, 25 Sup. Ct. 342, 49 L. Ed. 615; Taylor v. Louisville & N. R. Co., 88 Fed. 350, 356, 31 C. C. A. 537. Fraud and mistake are ancient heads of equity jurisdiction. The Board of Equalization made a plain mistake, demonstrable by the mere division of their assessment of the corporate plant of the company in the state by the number of miles of railroad they found the company controlled therein, when it certified to the county of Bent its overassessment of the company's property in that county. The systematic and intentional omission of watches, clocks, and jewelry, credits, and fat stock by the county assessor from the assessment of the property within his jurisdiction, however innocent in actual intention, was either an intentional fraud upon the complainant or such a gross mistake that it was a fraud in law.

Counsel cite the statute of Colorado, which provides that the board of county commissioners shall refund all taxes paid by any person which are afterwards found to be erroneous or illegal (Laws Colo. 1902 [Ex. Sess.] p. 146, c. 3, § 202), and contend that the complainant has an adequate remedy by an action at law based upon this statute. Conceding, without deciding, that it might maintain such an action to recover back the illegal portion of the tax against its property, is that remedy as adequate as the injunction of the court below? The adequate remedy at law which will deprive a court of equity of jurisdiction is a remedy as certain, complete, prompt, and efficient to attain the ends of justice as the remedy in equity. Williams v. Neely, 134 Fed. 1, 10, 67 C. C. A. 171, 180, 69 L. R. A. 232; Boyce v. Grundy, 3 Pet. 210, 215, 217, 7 L. Ed. 655; Springfield Milling Co. v. Barnard & Leas Mfg. Co., 81 Fed. 261, 265, 26 C. C. A. 389, 393; Brown v. Arnold, 131 Fed. 723, 67 C. C. A. 125. The facts and the law of this case have been ably presented to and carefully considered by two courts, and all the material issues in it have been determined. The complainant now has and it is entitled to keep the $3,580 requisite to pay the illegal portion of its tax. An injunction in this suit will enable it to retain it, and will end this controversy here. In order to obtain any adequate relief at law, it must pay over this $3,580 to the defendant, must bring, try, and prosecute to judgment an action at law against the county to recover it back, must possibly, it may be probably, come again to this court for review of that trial, and then possibly, perhaps probably, prosecute a petition for a mandamus to compel the levy of taxes to pay the judgment it shall recover, and after all this it will never secure more than a part of the actual expenses it will necessarily incur in prosecuting its action at law. This proposed remedy is neither as prompt, nor as certain, nor as complete, as the relief which may be granted through this suit in equity.

Not only this, but the omission of the fat stock and the credits had been repeated by the officials of this county year after year. It was their habitual practice to omit them, and this practice threatened to continue. It had grown into a rule, and yet it was a violation of the Constitution of the state, which requires that "all taxes * * * shall be levied and collected under general laws, which shall prescribe such regulations as shall secure a just valuation for taxation of all property real and personal" (article 10, § 3), and of the statute, which

required all personal property not exempt to be assessed. It was systematic, intentional, and continuing, and where there is a systematic, intentional, continuing omission or undervaluation of other taxable property by the taxing officers of a state or county, in violation of the Constitution or law, which inevitably effects an unjust discrimination in taxation against the property of the complainant and against other property similarly situated, a bill in equity will lie to enjoin the collection of that portion of the tax which resulted from the illegal discrimination. Cummings v. National Bank, 101 U. S. 153, 158, 25 L. Ed. 903; Raymond v. Chicago Traction Company, 207 U. S. 20, 36, 37, 28 Sup. Ct. 7, 52 L. Ed. 78; Railroad and Telephone Companies v. State Board of Equalizers (C. C.) 85 Fed. 302, 307, 318; Fargo v. Hart, 193 U. S. 490, 503, 24 Sup. Ct. 498, 48 L. Ed. 761; Reagan v. Farmers' Loan & Trust Company, 154 U. S. 362, 391, 14 Sup. Ct. 1047, 38 L. Ed. 1014; Nashville, C. & St. L. Ry. v. Taylor (C. C.) 86 Fed. 168, 184; Louisville Trust Co. v. Stone, 107 Fed. 305, 46 C. C. A. 299.

The facts of this case bring it under this rule, and the decree below must be reversed. The complainant may recover one-half of its costs in this court. The case must be remanded to the court below, with instructions to cause the costs of the parties in that court to be taxed and equally divided between the complainant and the defendants, and to enter a decree to the effect that, upon condition that the complainant pay within 60 days after the entry of the decree all the taxes in controversy and the interest thereon, except $3,580 and the interest thereon, or such part of said taxes, less said $3,580, and interest, as shall remain due from it after crediting to it the balance, if any, due to it on account of the costs which are to be taxed, the defendants be perpetually enjoined from collecting the said sum of $3,580 and interest, or any part thereof, on account of the tax in controversy or the proceedings thereunder; and it is so ordered.

NOTE.

Restraining Collection of Taxes Because of Excessive or Unequal Assessments or Valuations.

I. In General.

[a] Injunction will not lie to restrain collection of a tax on the ground that it is excessive.

—(D. C. 1886) Washington Market Co. v. District of Columbia, 4 Mackey, 416;

(Fla. 1871) King v. Gwynn, 14 Fla. 32;

(Ill. 1872) Munson v. Miller, 66 Ill. 380; (1888) La Salle & P. H. & D. R. Co. v. Donoghue, 127 Ill. 27, 18 N. E. 827, 11 Am. St. Rep. 90.

[b] (U. S. 1879) When a rule or system of valuation for purposes of taxation is adopted by those whose duty it is to make the assessment, which is intended to operate unequally, in violation of the fundamental principles of the Constitution, and when this principle is applied not solely to one individual, but to a large class of individuals or corporations, equity may properly interfere to restrain the operation of the unconstitutional exercise of power. —Cummings v. Merchants' Nat. Bank, 101 U. S. 153, 25 L. Ed. 903, affirming Merchants' Nat. Bank v. Cummings (1878) (C. C.) Fed. Cas. No. 9,453.

[c] (U. S. 1887) Where overvaluation has arisen from the adoption of a rule

of appraisement which conflicts with a constitutional or statutory provision, the collection of the excess will be enjoined upon payment or tender of the amount due upon a just valuation.—Stanley v. Albany County Sup'rs, 121 U. S. 535, 7 Sup. Ct. 1234, 30 L. Ed. 1000.

[d] (U. S. 1880) A court of equity will not restrain the collection of a tax upon the ground of excessive valuation.—Woodman v. Ely (C. C.) 2 Fed. 839.

[e] (Colo. 1907) Conceding that the collection of a tax levy based on a fraudulent assessment may be enjoined without regard to the question of adequate remedy at law, such relief will only be granted where it appears that the complaining party has suffered, or will suffer, injury by such assessment. —Hallett v. Board of Com'rs of Arapahoe County, 90 Pac. 678; Board of Com'rs of Arapahoe County v. Hallett, Id.

[f] (Ill. 1898) Equity has jurisdiction to restrain collection of an excessive assessment, fraudulently levied to enable the assessor to obtain a bribe for reducing it, unless there are sufficient statutory remedies.—New Haven Clock Co. v. Kochersperger, 175 Ill. 383, 51 N. E. 629.

[g] (Ill. 1907) An injunction will not lie to restrain the collection of taxes on the ground of illegality of the assessment, unless it is clearly made to appear that the party has been wrongfully assessed.—Pierce v. Carlock, 224 Ill. 608, 79 N. E. 959.

[h] (Iowa, 1908) That assessments were made on a full cash valuation instead of on quarter valuation was no ground for equitable relief to a taxpayer, where he made no offer to pay any tax, though conceding his property was subject to taxation, his remedy being by application to the board of equalization for its correction.—Reed v. City of Cedar Rapids, 116 N. W. 140.

[i] (Kan. 1898) The collection of a tax will not be enjoined on the ground of a merely excessive or unequal assessment, which is an error of judgment only, where no principle of law is violated in making the assessment, the statute having designated that such relief shall come from the board of equalization.—Board of Com'rs of Lincoln County v. Bryant, 7 Kan. App. 252, 53 Pac. 775.

[j] (Kan. 1908) Injunction will not be awarded to prevent the collection of a tax on the ground of an irregular or excessive assessment, unless the case comes clearly under some acknowledged head of equity jurisdiction.—Board of Com'rs of Finney County v. Bullard, 94 Pac. 129.

[k] (Ky. 1898) A taxpayer, upon mere opinion of excessive valuation, cannot prevent, by injunction, the collection of taxes due the state or county.—Royer Wheel Co. v. Taylor County, 47 S. W. 876.

[l] (Ky. 1903) Equity will not enjoin the collection of a tax as excessive unless it is so much so as to import fraud or amount to spoliation.—City of Covington v. Shinkle, 74 S. W. 652, 25 Ky. Law Rep. 73.

[m] (Okl. 1898) Where the territorial board of equalization, in raising the total returns of any county, raise the assessed valuation of the property of an person or persons above its actual value, injunction will lie to restrain the collection of all taxes based on the valuation in excess of the true value thereof.—Weber v. Dillon, 54 Pac. 894.

[n] (Or. 1909) Equity will not in general restrain the collection of public revenue for mere illegality or irregularity in the proceeding, such jurisdiction being confined to cases where the tax itself is not authorized by law or is assessed on property not subject to taxation, or the persons exacting it are without authority in the premises or have proceeded fraudulently, etc.—Yamhill County v. Foster, 99 Pac. 286.

[o] (Pa. 1890) An injunction restraining the collection of taxes will be granted, in Pennsylvania, where the assessors of a city of the third class have made an assessment for city purposes greatly in excess of the triennial assessment for state and county purposes made the previous year.—Kemble v. City of Titusville, 135 Pa. 141, 19 Atl. 946.

[p] (Tex. 1897) A petition for an injunction restraining the collection of a tax, which states that the tax was based upon an assessment which was unreasonably excessive, and made in fraud of plaintiff's rights, and discriminates against him, states a cause of action.—Johnson v. Holland (Civ. App.) 43 S. W. 71.

II. BANKS OR OTHER MONEYED CORPORATIONS.

[a] (U. S.) A bank whose capital stock is assessed at full value, while all other property is assessed at less than half value, may obtain relief in equity by enjoining collection of the excess.—(1878) Merchants' Nat. Bank v. Cumming (C. C.) Fed. Cas. No. 9,453, affirmed Cummings v. Merchants' Nat. Bank (1879) 101 U. S. 153, 25 L. Ed. 903.

[b] (U. S. 1879) Where there is a systematic and intentional valuation of all other moneyed capital by the taxing officers far below its true value, while the shares of a national bank are assessed at their full value, in violation of the act of congress which prescribes the rule by which they shall be taxed by state authority on a tender of the sum which such shares ought to pay under the rule established by such act, a court of equity will enjoin the state authorities from collecting the remainder.—Pelton v. Commercial Nat. Bank, 101 U. S. 143, 25 L. Ed. 901.

[c] (U. S. 1893) Under the law of New Mexico, which requires property to be assessed at its cash value, property of a national bank was so assessed, but on appeal to the board of equalization the assessment was reduced to 85 per cent. of the full value. *Held*, that the mere fact that other property was assessed at 70 per cent. of its value, not through any design or systematic effort on the part of the assessors, would not justify an injunction to restrain the collection of the tax.—Albuquerque Nat. Bank v. Perea, 147 U. S. 87, 13 Sup. Ct. 194, 37 L. Ed. 91, affirming (1891) 5 N. M. 664, 25 Pac. 776.

[d] (U. S. 1884) Inequalities in the valuation of property for taxation, under the Constitution and laws of a state requiring that all property shall be taxed upon its value by a uniform rule, afford no ground for relief, unless it be made to appear that such inequalities result not merely from error in judgment on the part of the assessing officer, but it must appear also that there was an intentional discrimination. The same rule applies to the valuation of shares in national banks for taxation, where it appears that they were actually assessed at a greater rate than other moneyed capital in the hands of individual taxpayers of the state. Intentional discrimination may be established by proof of inequalities so gross as to lead the court to the conclusion that they were designed. But the facts do not warrant such conclusion in this case.—Exchange Nat. Bank v. Miller (C. C.) 19 Fed. 372.

[e] (U. S. 1885) Where the taxing officials assess all personal property at six-tenths of its actual value, but national banks are assessed at a larger per centum of the actual value of their shares, the collection of the excess will be restrained; and this, although the excess is imposed by a state board of equalization in its attempts to equalize the national banks among themselves throughout the state, or to equalize all "incorporated banks," state and national.—First Nat. Bank v. Treasurer (C. C.) 25 Fed. 749.

[f] (Iowa, 1906) S., while doing business as a private banker with a nominal capital of $10,000, and while in fact insolvent, listed his taxable moneys and credits for 1904 at $11,000, to conceal his real financial condition. Taxes were levied on this sum, and after an assignment for the benefit of creditors, an inventory of the estate disclosed assets of about $150,000 as against an indebtedness of more than $180,000. *Held*, that, as the right to offset debts against credits was a personal privilege, it not being claimed that any creditor had any knowledge of the assessment until after the failure of the bank or that any person was misled to his injury, the assignee was not entitled to restrain the collection of the tax.—Carpenter v. Jones County, 107 N. W. 435.

[g] (N. Y. 1902) Equity will not restrain the collection of a tax on national bank stock imposed by New York City, though the stock was assessed at its actual value, while real estate was assessed at only 60 per cent., although the grievance cannot, under Laws 1882, c. 410, §§ 819–821 (section 821 having been amended by Laws 1885, c. 311), be reached by certiorari, and no other legal remedy exists; it being presumed, in the absence of evidence, that the taxing officers acted honestly and impartially, and with no intention to unjustly discriminate, and the valuation as fixed by them being uniform with respect to each class of property. Judgment (Sup. 1900) 63 N. Y. Supp. 1111, affirmed.—Mercantile Nat. Bank v. City of New York, 172 N. Y. 35, 64 N. E. 756.

[h] (Tex. 1887) The collection of a tax assessed under a state statute, up-

on national bank shares, cannot be enjoined on the ground that the tax is at a greater rate than upon other moneyed capital, where the statute provides that the shares shall be assessed according to their actual value; and in arriving at that value the liabilities of the bank are deducted from its credits, and the shareholders thus given the benefit of the reduction, the value of the shares being decreased to an extent proportionate to the liabilities of the bank; and, if the claim of plaintiff is that his individual debts should be taken from the value of his shares, he should show that he owes such debts; otherwise the tax is valid as to him.—Rosenberg v. Weekes, 67 Tex. 578, 4 S. W. 899.

III. Railroads or Railroad Property.

[a] (U. S. 1907) A federal court will not enjoin the collection of state taxes on railroad property because of undervaluation of the other taxable property in the state, where such inequality is not the result of a scheme or agreement among the taxing officers.—Chicago, B. & Q. Ry. Co. v. Babcock, 204 U. S. 585, 27 Sup. Ct. 326, 51 L. Ed. 636; Union Pac. R. Co. v. Fink, Id.

[b] (U. S. 1895) Under Const. Kan. art. 11, § 1, requiring taxation to be equal and uniform, a railroad company, which was assessed by a state board for the full value of its property, is entitled to an injunction to restrain collection in a certain county of the excess beyond the rate of one-third the value of its property in such county, all other property therein having been assessed at that rate.—Chicago, B. & Q. R. Co. v. Republic County Com'rs, 14 C. C. A. 456, 67 Fed. 411, 32 U. S. App. 224.

[c] (U. S. 1903) In order to entitle a railroad company whose property has been fully valued for taxation to complain of an undervaluation of other property and to relief in equity by having its own valuation cut down to an equality with that of the property undervalued, it is essential that the undervaluation should have been intentional, and that it should have been systematic or habitual, relating to a large species of property.—Louisville & N. R. Co. v. Coulter (C. C.) 131 Fed. 282.

[d] (U. S. 1905) The collection of a tax levied against the property of railroad companies on an assessment of its actual value cannot be enjoined on the ground that other property in the state was assessed at less than its actual value, in violation of the statute, unless it is shown that such undervaluation was fraudulent, intentional, and systematic.—Michigan Railroad Tax Cases (23 Cases) (C. C.) 138 Fed. 223.

[e] (Ill. 1880) Courts have no power to revalue property for taxation; nor will the collection of a tax against a railroad company be enjoined because the assessors have not made extensive and particular inquiries as to the precise value of the property taxed, when it is the owner's duty to make returns as required by law.—Union Trust Co. v. Weber, 96 Ill. 346.

[f] (Kan. 1895) Where the assessors in a county, by agreement, assessed the property of a railroad company at its actual value, and other property of the county at 25 per cent. of its value, the excess against the railroad company is illegal, and its collection may be restrained.—Chicago, B. & Q. R. Co. v. Atchison County Com'rs, 54 Kan. 781, 39 Pac. 1039.

[g] (Kan. 1899) Where, by a violation of the provisions of law, one class of taxable property is charged with more than its proper proportion of taxes, injunction is the proper remedy.—Missouri, K. & T. Ry. Co. v. Board of Com'rs of Geary County (App.) 58 Pac. 121.

[h] (Or. 1901) A bill to restrain a county and the sheriff from collecting certain taxes assessed against a railroad alleged that the assessor, with intent to defraud, oppress, and discriminate against the railroad, had assessed the property at an unequal and disproportionate rate. The details and particulars of the fraud were set out, and it charged a second member of the board of equalization with knowledge of the fraudulent assessment, and that relief was improperly refused by such board. *Held*, that a cause of action within the jurisdiction of the court was stated, since a court of equity has jurisdiction to restrain the collection of a tax illegally assessed arbitrarily and fraudulently with the purpose of casting a public burden on certain property owners.—Oregon & C. R. Co. v. Jackson County, 64 Pac. 307, order modified on rehearing 65 Pac. 369.

[i] (Tex. 1880) The board of equalization has power, under the Constitution and Act Aug. 21, 1876, to determine the value of property listed, when the question is properly referred to it, under section 5 or section 17 of the act; and that a taxpayer thinks the valuation excessive affords no ground for resort to the courts.—International & G. N. R. Co. v. Smith County, 54 Tex. 1.

IV. CORPORATE STOCKS OR PROPERTY IN GENERAL.

[a] (U. S. 1902) The Illinois state board of equalization, pursuant to the mandate of the state courts, reassessed the capital stock of certain corporations and their franchises for the year 1900. Such reassessments were from 30 to 47 per cent. higher than the assessments for 1901. The board endeavored to approximate the aggregate indebtedness of the corporations and their capital stock as measured by the stock market quotations for April 1, 1900. The reassessments, if made upon the basis of a capitalization of the net earnings by 6 per cent., would approximate the assessments for the year 1901. *Held*, that the reassessments did not express the result of the board's independent quasi judicial judgment, but were in fact fictitious, involving mistake, fraud, or coercion, threatening to deprive the corporations of their property without due process of law and of the equal protection of the law, entitling such corporations to equitable relief.—Chicago Union Traction Co. v. State Board of Equalization (C. C.) 114 Fed. 557; Chicago Consol. Traction Co. v. Same, Id.; South Chicago City Ry. Co. v. Baird, Id.; Chicago Edison Co. v. Raymond, Id.; Chicago City Ry. Co. v. Same, Id.; People's Gaslight & Coke Co. v. Same, Id.; Chicago Tel. Co. v. Same, Id.

[b] (U. S. 1908) A federal court will not grant injunctive relief against the collection of taxes imposed by a state on a foreign corporation because of the methods adopted by a state board in arriving at the valuation of the property of the corporation unless in case of fraud or clearly shown adoption of a wrong principle.—Western Union Telegraph Co. v. Wright (C. C.) 158 Fed. 1004; Jackson Lumber Co. v. McCrimmon (C. C.) 164 Fed. 759.

[c, d] (Ill. 1882) The collection of a tax on corporation stock will not be enjoined because it appears that the valuation made by the board of equalization was inaccurate, the statement of the corporation, in its return to the auditor, having been incorrect, and the board having exercised its judgment, although the board was notified, before its decision was made, of the actual value of the stock.—Traders' Ins. Co. v. Farwell, 102 Ill. 413.

[e] (Ill. 1900) In the absence of fraud, the collection of a tax on corporate property will not be enjoined on the ground that the valuation fixed by the assessor is excessive, since, under Const. 1870, art. 9, § 1, providing that the valuation is to be fixed by some person appointed in such manner as the Legislature shall provide, "and not otherwise," courts have no power to fix valuations of property for taxation.—Burton Stock Car Co. v. Traeger, 187 Ill. 9, 58 N. E. 418.

[f] (Ky. 1905) An estimate of corporate property by the board of supervisors in excess of its actual value cannot be remedied in a suit by the taxpayer to enjoin the collection of the tax.—Johnson v. Bradley-Watkins Tie Co., 85 S. W. 726, 27 Ky. Law Rep. 540.

[g] (Md. 1861) To entitle the owners of corporate property to relief in equity against excessive taxation, they must present a strong case, assigning something more than legal error, and appealing to the conscience of the court. —O'Neal v. Virginia & M. Bridge Co., 18 Md. 1, 79 Am. Dec. 669.

V. REAL PROPERTY IN GENERAL.

[a] (U. S. 1889) A bill to restrain a levy under a tax bill alleged that an appeal was duly taken to the board of equalization, which was duly heard, and the valuation reduced, but that this action by the board was illegal and erroneous, and that the board proceeded without any authority of law, and without any jurisdiction, to fix the value on the premises. Rev. St. Mo. §§ 6672–6674, confer on the board power to hear complaints, and to equalize the valuation and assessments; and provide that this shall be done by raising the valuation of such property as in their opinion has been returned too low, and reducing such as has been returned too high; that they shall hear and

determine all appeals made from the valuation of an assessor, in a summary way, and correct and adjust the assessment accordingly. *Held*, that the bill failed to show any such illegality in the action of the board as would authorize the court to interfere.—Hazard v. O'Bannon (C. C.) 38 Fed. 220.

[b] (Ind. 1905) Burns' Ann. St. 1901, § 8642, provides that no tax authorized by law shall be invalid for want of any matter of form in any proceeding not affecting the merits of the case and which shall not prejudice the rights of the party assessed, and that all taxes assessed on any property in the state shall be presumed to be legally assessed until the contrary is affirmatively shown. *Held*, that a taxpayer is not entitled to injunctive relief against taxes, on the ground of excessive valuation, without showing that a tax has been imposed on his lands greater than their just share.—Fell v. West (App.) 73 N. E. 719.

[c] (Kan. 1892) If the assessors of a county agree among themselves to assess all the real property of the county at 25 per cent. of its actual cash value, and some of the assessors return an assessed valuation of their townships at a much less proportion, and thereafter the county board of equalization, to equalize the valuation of the property, raises the assessed valuation of all the land in certain townships to 25 per cent. of its actual cash value, such assessment and equalization will not authorize an injunction to restrain the collection of the taxes levied upon such increased assessment or equalization. —Challiss v. Rigg, 49 Kan. 119, 30 Pac. 190.

[d] (Mich. 1871) An injunction will issue to restrain the collection of an excessive tax, where it appears that taxing officers have fraudulently assessed the lands of an individual above their value, and relatively above the other assessments on the roll, with a view to impose upon him more than his just proportion of taxation. While the court will not interfere to review the conclusion of the assessor's judgment, it will correct an arbitrary and capricious exertion of official authority, founded not on the exercise of the officers' discretion, but upon resentments, cupidity, or malice.—Merrill v. Humphrey, 24 Mich. 170.

[e] (Mich. 1889) Where, by collusion between the assessors and the owners, property is intentionally assessed far below its true value, equity will relieve the owner of real property in the same city, fairly assessed, from such portion of the taxes thereon as is imposed by reason of the fraudulent undervaluation of the property first mentioned.—Walsh v. King, 74 Mich. 350, 41 N. W. 1080.

[f] (Ohio, 1889) A treasurer will not be enjoined from collecting taxes on an addition placed on the value of realty by the city board of equalization, on the ground of its being disproportionately in excess of other property, where the board had investigated the matter on notice of complainant, and there is no evidence of fraud.—Lackman v. Zumstein (Com. Pl.) 10 Ohio Dec. 518, 21 Wkly. Law Bul. 319.

[g] (Okl. 1898) A tax levied on an excess over the true cash valuation of land will be enjoined, where the tax due on the true cash valuation is paid or tendered before suit is brought.—Bardrick v. Dillon, 54 Pac. 785.

[h] (Va. 1908) Even if in case of a perpetual lease of land at a fixed rental, the lessee to pay the taxes, the buildings put on the land by the lessee should not be assessed in his name, but they, as well as the taxes on the land, should be assessed in the name of the lessor, yet he would not be prejudiced by the mode of assessment, and there being adequate remedy at law, by motion, to have the assessment corrected, any such error in assessment is not ground for having collection of the taxes enjoined.—City of Norfolk v. J. W. Perry, Co., 108 Va. 28, 61 S. E. 867.

[i] (W. Va. 1869) There is no law making it the duty of the assessor to change or diminish the valuation of lands from the general assessment last preceding. In the absence of such law a court of equity cannot relieve from the payment of taxes regularly assessed, no matter from what causes have arisen the depreciation of the property since its assessment.—White Sulphur Springs Co. v. Robinson, 3 W. Va. 542.

[j] (Wis. 1867) Where the taxing officers make in their assessment a fraudulent discrimination to compel the owner of a school land certificate to pay

more than his just share, its collection will be restrained.—Lefferts v. Calumet County Sup'rs, 21 Wis. 688.

[k] (Wis. 1886) Where it is shown that the improved farms in a town were willfully assessed at less than their actual value, with intent to relieve the owners from the payment of their just portion of the taxes, proceedings under the assessment are properly stayed.—Spear v. Door County, 65 Wis. 298, 27 N. W. 60.

VI. MORTGAGES AND PERSONAL PROPERTY IN GENERAL.

[a] (U. S. 1885) Where the law requires that mortgages shall be valued for taxation at their face value, and all lands at their "true cash value," and the assessor of a county willfully and uniformly values the mortgages on lands therein at their face value, and the lands therein at only one-third of their cash value, such assessment is illegal, and the payment of the two-thirds of the tax thereby imposed on said mortgages may be enjoined.—Dundee Mortg. Trust Inv. Co. v. Parrish (C. C.) 24 Fed. 197.

[b] (Ariz. 1903) Where a board of equalization placed an overvaluation on personal property, without the exercise of judgment as to the true value thereof, but arbitrarily for the purpose of oppression, equity will grant relief.—Cochise County v. Copper Queen Consol. Min. Co., 71 Pac. 946.

[c] (Cal. 1898) An owner of personal property may enjoin its sale for taxes, where the assessment was fraudulently made, at excessive values, in fixing which he was knowingly discriminated against, where he has tendered the legal tax, founded upon the real value of the property.—Pacific Postal Tel. Co. v. Dalton, 119 Cal. 604, 51 Pac. 1072.

[d] (Ill. 1878) A county board of equalization raised the tax on personal property in one town 20 per cent., but made no change in other towns, which increased the aggregate value of the assessed property in that town over $2,000,000, and in consequence the aggregate assessed value of the entire property of the county was increased by a large per cent. The state board then directed that 57 per cent. be added to the assessed value of personal property in the county in question, which was accordingly done. *Held*, that the proceedings of the county board were void, and the collection of the tax on the increased valuation should be enjoined.—Kimball v. Merchants' Savings, Loan & Trust Co., 89 Ill. 611.

[e] (Ill. 1878) Equity will not enjoin the collection of a tax where the bill fails wholly to show any case of fraudulent assessment, but one only of an excessive valuation of property, and irregularity in the making of the assessment, as where, in a taxpayer's absence, his brother and former partner gave a schedule of his personal property, fixing an excessive valuation, to the assessor, who adopted it in good faith.—Gage v. Evans, 90 Ill. 569, affirming Evans v. Gage (1878) 1 Ill. App. (1 Bradw.) 202.

[f] (Ill. 1894) Where the county board raises the assessment on certain personal property in order to balance a reduction illegally made by the board in the assessment of other property, the owner of the property whose assessment is so raised may enjoin the collection of taxes based on such increased assessment, since, the reduction being void, the effect of the increase would be to increase the total assessment, contrary to Rev. St. c. 120, § 97.—Workingmen's Banking Co. v. Wolff, 150 Ill. 491, 37 N. E. 930.

[g] (Ill. 1902) Where a board of review imposes a penalty on a mortgagee who declines to disclose to it the name of his assignee, after the mortgage has been transferred in good faith, by raising the assessment to the amount of the mortgage, a tax based on such assessment will be enjoined.—Condit v. Widmayer, 196 Ill. 623, 63 N. E. 1078.

[h] (Iowa, 1908) In proceedings by a county treasurer to assess property withheld from taxation for several years, the county treasurer fixed the valuation in the sum exceeding $10,000, except for one year, when the amount was fixed slightly above $4,000. The testimony of the owner showed that not more than $4,000 of his property was pension money received from the federal government. The assessment was based on a finding of a larger amount of moneys and credits than the owner was entitled to claim as exempt. *Held*, that the treasurer had jurisdiction, and his decision was reviewable only on

appeal, as provided by Code Supp. 1902, § 1407a, and a suit to enjoin the enforcement of the assessment did not lie.—Bednar v. Carroll, 116 N. W. 315.

[i] (Ky. 1888) Individual grievances, founded merely upon opinion that personal property has been assessed too high, furnish no ground for enjoining the collection of the state's revenue.—Russell v. Carlisle, 8 S. W. 14, 10 Ky. Law Rep. 25.

[j] (Okl. 1900) Where a party seeks to enjoin the collection of a tax on personal property because the board of equalization raised the valuation of the property above the returned valuation by the assessor, it devolves upon him not only to allege in his petition, but to prove, that the property was listed and returned for assessment at its true cash value, since Organic Act, § 6, and the statutes, provide that all taxable property shall be assessed according to its actual cash value.—Streight v. Durham, 61 Pac. 1096.

[k] (Okl. 1909) Where a party seeks to enjoin collection of a tax on personal property because the board of equalization raised the valuation of the property as returned by the assessor, he must allege and prove that the property was listed and returned for assessment at its actual cash value.—Rose v. Durham, 61 Pac. 1100.

[l] (Or. 1893) The state board of equalization increased the assessment of mortgages a certain per cent. In an action to enjoin the collection of taxes on a mortgage at such increased valuation, it appeared that the state board of equalization adopted a resolution to equalize real property at its fair value in money, and that the members of the board visited several counties, and endeavored to so equalize it. *Held* that, in the absence of evidence showing any willful intent or arbitrary act on the part of the board in making such increase to discriminate against the holders of mortgages, an injunction should not be granted.—Smith v. Kelly, 24 Or. 464, 33 Pac. 642.

[m] (Wis. 1909) Injunction will not lie to restrain a town treasurer from levying upon personal property under his tax warrant, but if the owner deems the tax excessive, his remedy is to pay the tax under protest, and bring suit to recover the unlawful excess.—Duluth Log Co. v. Town of Hawthorne, 120 N. W. 864.

(172 Fed. 220.)

THE BARALONG.

(Circuit Court of Appeals, Second Circuit. May 19, 1909.)

No. 250.

SHIPPING (§ 132*)—LIABILITY FOR INJURY TO CARGO—EFFECT OF EXCEPTIONS IN BILL OF LADING.

To entitle a shipper to recover for damage to cargo from heat, when liability for such damage is excepted in the bill of lading, the burden rests on him to show that the carrier was negligent in stowing or ventilating the cargo.

[Ed. Note.—For other cases, see Shipping, Cent. Dig. § 481; Dec. Dig. § 132.*

Burden of proof as to cause of loss or injury to goods shipped by vessel and diligence or negligence of carrier, see note to The Patria, 68 C. C. A. 398.]

Appeal from the District Court of the United States for the Southern District of New York.

Convers & Kirlin (J. Parker Kirlin and John M. Woolsey, of counsel), for appellant.

Robinson, Biddle & Benedict (Roderick Terry, Jr., and Wm. S. Montgomery, of counsel), for appellee.

Before LACOMBE, COXE, and NOYES, Circuit Judges.

PER CURIAM. This case was decided by the District Court in September, 1907, upon the authority of an earlier decision of that court in the case of The St. Quentin, reported in 162 Fed. 883. And we agree with the District Court that the two cases are similar in principle. After careful consideration we are unable to differentiate between them in any material particular favorable to the libelant. Under both bills of lading we think that, in view of the exception of damage from heat, the burden rested upon the libelant to show that the carrier was negligent in stowing or ventilating the cargo or otherwise. This he failed to establish. Indeed, here the evidence goes far toward establishing freedom from negligence on the carrier's part. It follows, therefore, that the same principles which required this court to reverse the decision of the District Court in the case of The St. Quentin, 162 Fed. 883, require us to reverse its decree in the present case.

The decree is reversed, with costs, and the cause remanded, with instructions to dismiss the libel, with costs.

NOTE.—The following is the opinion of Adams, District Judge in the court below:

ADAMS, District Judge. This action was brought by E. E. Androvette, the owner of 189 bags of shellac, against the steamship Baralong, to recover the damages claimed to have been suffered by reason of the delivery of a portion of the shellac in bad order. It was shipped at Calcutta for New York on the 28th of August, 1906, in good order, according to the bill of lading, and delivered, according to the evidence, in damaged condition by some of the shellac being fused and stuck together. The damage was doubtless due to heat and

unless there was some negligence on the vessel's part, it was protected by a clause in the bill of lading exempting the carrier for damage caused in that way.

It is urged by the libellant that although heat caused the loss, the clause of the bill of lading is ineffective because the heat was caused by the negligence of the vessel in failing to fully ventilate the cargo.

The injured shellac was stowed in the square of one of the hatches. Other shellac stowed in the wings of the ship was uninjured. It is probable that there was a draught in the former which the latter would not be subjected to and that doubtless will account for the damage. This case seems to be similar in principle to The St. Quentin (decided by Judge Holt January 17, 1907) 162 Fed. 884, where it was held that the damage was due to negligence in furnishing insufficient ventilation. The evidence here shows that some of the shellac was blocked when shipped, but probably not injured thereby, the real damage was due to excessive heat in the particular place of stowage of the damaged shellac, which must have been caused by negligence. Although the burden of showing this was upon the libellant in view of the exception, there seems to be no other explanation of the damage than that some negligence existed in the stowage and ventilation, subjecting the shellac to an extraordinary degree of heat. The exception does not suffice to relieve the claimant from responsibility for these deficiencies. The testimony shows that the refuse lac required something like 140 degrees Fahrenheit to make it fuse, while the testimony from the steamer is that the heat to which it was subjected did not at any time exceed 90 degrees. Taking all the testimony into consideration, it sufficiently establishes negligence on the part of the vessel in subjecting the injured lac to a degree of heat which the exception does not cover and which can only be accounted for by negligence.

Decree for libellant, with an order of reference to ascertain the extent of the damages caused by the negligence of the vessel.

(172 Fed. 221.)

NOVELTY GLASS MFG. CO. v. BROOKFIELD.

(Circuit Court of Appeals, Third Circuit. August 12, 1909.)

No. 6, October Term, 1908.

1. PATENTS (§ 325*)—SUIT FOR INFRINGEMENT—COSTS—FAILURE TO FILE DISCLAIMER.

Rev. St. § 4922 (U. S. Comp. St. 1901, p. 3396), which provides that a patentee who has inadvertently claimed more than he is entitled to cannot recover costs in a suit for infringement unless he has filed a disclaimer as to the invalid claims before commencement of the suit, makes it obligatory on the courts to deny costs in such case both in the Circuit and appellate courts, although the decision that certain claims are invalid is first made by the latter court in affirming the decree of the court below as to other claims on general assignments of error which challenge the validity of all of the claims.

[Ed. Note.—For other cases, see Patents, Cent. Dig. §§ 607-612; Dec. Dig. § 325.*]

2. PATENTS (§ 325*)—SUIT FOR INFRINGEMENT—COSTS ON APPEAL—PLEADINGS.

The question does not depend on the pleadings in the appellate court, and cannot be made to. Even, therefore, if the assignments of errors are severable or distributive between the different claims of patents, and in consequence have to be overruled, the costs must nevertheless be denied; such assignments only going to the issues raised according to which the decree below is to be considered.

[Ed. Note.—For other cases, see Patents, Dec. Dig. § 325.*]

3. PATENTS (§ 325*)—SUIT FOR INFRINGEMENT—FAILURE TO DISCLAIM—COSTS.
The effect of failure to disclaim is negative merely. The statute denies costs, but does not give them, and defendant is not entitled to recover costs, because of the want of disclaimer.
[Ed. Note.—For other cases, see Patents, Dec. Dig. § 325.*]

4. PATENTS (§ 322*)—SUIT FOR INFRINGEMENT—FAILURE TO DISCLAIM—PROFITS AND DAMAGES.
Much less is the plaintiff upon that account to be refused an account for profits and damages.
[Ed. Note.—For other cases, see Patents, Dec. Dig. § 322.*]

On Motion to Modify Mandate.
For opinion on the merits, see 95 C. C. A. 516, 170 Fed. 946.

Joseph C. Fraley, for the motion.
Robert N. Kenyon, opposed.

Before GRAY and BUFFINGTON, Circuit Judges, and ARCHBALD, District Judge.

ARCHBALD, District Judge. But one claim of the patent in suit having been sustained, a motion is made to deny costs to the complainants. This motion, in our judgment, must prevail. By the express provision of the statute (Rev. St. § 4922 [U. S. Comp. St. 1901, p. 3396]), whenever a patentee, through inadvertence, accident, or mistake, and without any willful default or intent to defraud or mislead the public, has claimed more than he is entitled to, while he may maintain a suit for infringement of the part which is bona fide his own, no costs are recoverable unless a proper disclaimer has been entered before the commencement of the suit as to the rest, for which provision is made by section 4917; nor, even then, if the disclaimer has been unreasonably neglected or delayed. Where these conditions appear, the court has no discretion, and costs must be denied as a matter of law.

In the present instance the complainants relied on the first, second, third, sixth, seventh, and eighth claims of the patent involved, which were thus put at issue, and all but claim 2 found to be beyond what the inventor was entitled to; the first being too broad, and the others being distinguished from the second by elements not of sufficient significance to be made the subject of separate claims. Within the meaning of the statute, the inventor had thus got more by his patent than he could maintain, and was required, in consequence, to disclaim the rest, in order to save the good from the bad, which not having been done before suit was brought, even though the patent is in part valid, there can be no costs.

The question does not depend on the pleadings in this court, as argued, and cannot be made to. The assignments of error may not, as they stand, be severable or distributive between the different claims, and may have to be overruled, as they have been; one of the claims being found good. But that does not control. It only goes to what are to be regarded as the issues raised, according to which the decree below is to be considered and adjudged. We have decided that it

is entitled to a modified affirmance, having been justified so far as it is based on the one claim, but not as to the rest; and this brings up the judgment to be entered here and the mandate to be sent down. The statute, while allowing the patentee to cure his patent—when found to cover more than it should, which would under ordinary circumstances make it wholly bad—declares that no costs shall be recovered unless the privilege of disclaiming has been exercised before suit brought. This we have no authority to disregard. As indicated in the opinion disposing of the appeal, the decree must be affirmed as to claim 2 of the patent; but, there being no disclaimer as to the others, it will be without costs. And this applies as well to the costs in this court as in the court below; the same infirmity attending the suit here as there.

This relief is merely negative, however. It denies costs, but does not give them; and we see no occasion, in the conclusions reached with respect to the patent, to direct that the defendants shall recover any costs here, or any further portion of their costs below than was there allowed them. Much less do we feel that the complainants shall be denied the right to an accounting. The substance of the invention which the defendants are found to have deliberately infringed is contained in the claim which has been held to be valid, the others disallowed, excepting the first, being addressed to comparatively minor features; and we are not persuaded that profits have been included in the amount which the defendants have been directed to pay, which are ascribable to the use of the special form of device in either of them, distinct from the general invention, or that, in defending the suit, the defendants were put to any appreciable extent to costs and expenses beyond what they would have been had these claims been eliminated.

The judgment in this court and in the court below will therefore be without costs, except as the court there has allowed the defendants a certain portion of them; and, as so modified, the decree sustaining the second claim of the patent, finding infringement, and ordering the payment of profits, will be affirmed.

(172 Fed. 223.)

T. W. & C. B. SHERIDAN CO. et al. v. ROBERT O. LAW CO.

(Circuit Court of Appeals, Seventh Circuit. April 13, 1909.)

No. 1,530.

PATENTS (§ 283*)—SUITS FOR INFRINGEMENT—EQUITY JURISDICTION.

Where no special equities are pleaded, a suit in equity cannot be maintained for infringement of a patent which expired before the suit was brought.

[Ed. Note.—For other cases, see Patents, Cent. Dig. § 448; Dec. Dig. § 283.*]

Appeal from the Circuit Court of the United States for the Northern District of Illinois.

The bill filed December 19th, 1907, was in the usual form for an injunction (no prior adjudication or other special equity being set forth) restraining the infringement of letters patent No. 493,553, issued March 14th, 1893, and letters patent, No. 428,741, issued May 27th, 1890, upon machines for covering books and binding books—the latter patent expiring May 27th, 1907, about seven months before the commencement of the suit.

To the bill appellees filed a demurrer on the ground that the bill showed a misjoinder of an expired and a living patent, thereby making the bill multifarious. Upon the demurrer having been sustained by the court below, appellant elected to stand thereby, and thereupon the bill was dismissed, and this appeal taken.

A. G. N. Vermilya, for appellant.

Dwight B. Cheever, for appellee.

Before GROSSCUP, BAKER, and SEAMAN, Circuit Judges.

GROSSCUP, Circuit Judge (after stating the facts as above), delivered the opinion.

The court below, with the acquiescence of counsel for both parties, treated the demurrer as raising the question whether, no special equities having been pleaded, the complainant was entitled to an injunction upon a patent that had expired. Upon the authority of Root v. Railway Company, 105 U. S. 189, 26 L. Ed. 975, and other decisions, notably Consolidated Safety Valve Company v. Ashton Valve Co. (C. C.) 26 Fed. 319, we are of the opinion that in answering this question in favor of the appellee, the court committed no error. True, as intimated by Judge Seaman, in McDonald v. Miller (C. C.) 84 Fed. 344, a patent being about to expire, there may be special circumstances entitling the patentee to an injunction against the manufacture of infringing devices pending the expiration of the patent; as for instance, the manufacture of a supply of articles covered by the patent preparatory to their being put upon the market the moment the patent expires; for such manufacture within the time of the patent, in contemplation of providing the market, the moment the patent expires, would be a distinct damage to the monopoly of the patentee, who is entitled, against the manufacturer as well as against the user, to the injunction of "hands off" until the patent has actually expired.

But no such special equities are shown in this case. The appellee is a user, not a manufacturer. It made no preparation, prior to the expiration of the patent, to flood the market—the whole act complained of being its preparation to use the patent in its business as a binder of books, after the patent had expired. And if as the result of such preparation the appellant has suffered any injury, a full remedy is furnished at law.

The decree of the Circuit Court is affirmed.

(171 Fed. 646.)

DICKINSON v. MATHESON MOTOR CAR CO.

(Circuit Court of Appeals, Third Circuit. July 1, 1909.)

No. 11.

CORPORATIONS (§ 30*)—PROMOTER'S CONTRACT—RATIFICATION—QUESTION FOR JURY.

G., who was the owner of certain patent rights, agreed that plaintiff should receive 25 per cent. of the actual stock of any company which should be organized to exploit or purchase the patents. Defendant company was thereafter organized, partly through plaintiff's endeavors, and purchased the patent right from G. *Held*, that defendant's acceptance of the benefit of whatever value was contributed by plaintiff's services did not constitute such a ratification of the understanding between plaintiff and G. as would warrant a submission of the question of defendant's liability to plaintiff thereon to the jury.

[Ed. Note.—For other cases, see Corporations, Dec. Dig. § 30.*]

In Error to the Circuit Court of the United States for the Middle District of Pennsylvania.

For opinion below, see 161 Fed. 874.

John J. Lordan, John M. Coleman, and Ralph W. Rymer, for plaintiff in error.

John D. Coons and Willard, Warren & Knapp, for defendant in error.

Before DALLAS, GRAY, and BUFFINGTON, Circuit Judges.

BUFFINGTON, Circuit Judge. In the court below Dickinson, the plaintiff, recovered a verdict against the Matheson Motor Car Company, the defendant, for breach of an alleged contract to convey to him certain shares of its capital stock. The contract was said to have been made with the Matheson Motor Car Company, Limited, a limited partnership of the state of Michigan, the business of which was subsequently taken over by the defendant. It seems to have been assumed and accepted that, if the Michigan company was liable, the defendant should be so held as its successor. On the trial the court below held that under the Michigan statute the contract was ultra vires. Its ruling in that regard is not before us for review. It, however, submitted to the jury the question whether the defendant had enjoyed such fruit from the transaction as to amount to a ratification. The jury, by its verdict for the plaintiff, found such was the case. Subsequently the defendant moved for judgment non obstante veredicto, on the ground that there was no evidence to warrant submission of that question to the jury. In an opinion reported in 161 Fed. 874, the court so held, and to a judgment non obstante veredicto for defendant this writ of error was sued out.

It will thus be seen the case stands on its own particular facts, and, if the court was right in holding there was no evidence showing retention of the fruits of the transaction by the defendant, error is not established. We have examined the testimony, and are of opinion the court below was clearly right. Its analysis of the facts

and the grounds of its conclusion are so thorough and satisfactory that a discussion thereof by this court could be but a repetition.

We content ourselves, therefore, with adopting its opinion and affirming the judgment.

(172 Fed. 212.)

MINOT et al. v. SNAVELY.†

(Circuit Court of Appeals, Eighth Circuit. July 19, 1909.)

No. 3,022.

MASTER AND SERVANT (§ 330*)—INJURIES TO THIRD PERSONS—ACTION AGAINST MASTER—ISSUES—INCOMPETENCY OF SERVANT.

In an action against a master to recover for an injury to a third person through the alleged negligence of a servant in the line of his employment, the liability of defendant depends wholly upon the question whether the injury was caused by such negligence without contributory negligence. The question of the general competency or incompetency of the servant is immaterial in such case, and the reception of evidence on such an issue, tendered by plaintiff, and its submission to the jury, constitute error prejudicial to the defendant.

[Ed. Note.—For other cases, seee Master and Servant, Cent. Dig. § 1271; Dec. Dig. § 330.*]

In Error to the Circuit Court of the United States for the Western District of Missouri.

Lathrop, Morrow, Fox & Moore, R. J. Ingraham, and Cyrus Crane, for plaintiffs in error.

Fyke & Snider and James H. Richardson, for defendant in error.

Before VAN DEVANTER, Circuit Judge, and CARLAND, District Judge.

CARLAND, District Judge. Elizabeth R. Snavely sued Minot and Adams, as trustees, to recover damages for the negligent killing of her husband on March 2, 1908, while passing from a passenger elevator operated in the American Bank Building, Kansas City, Mo. She recovered a verdict of $5,000. The petition specified two grounds of negligence: (1) Negligent and careless operation and handling of the elevator by the person in charge thereof at the time Snavely received the injury which resulted in his death. (2) That the agent or servant in charge of said elevator was wholly unfit by reason of his youth and inexperience to handle the elevator with safety, which facts defendants well knew or by the exercise of ordinary care might have known. The parties to the action in this opinion will be called plaintiff and defendants respectively, as they appeared in the trial court. At the trial, for the purpose of sustaining the charge of negligence in the above specification numbered two, counsel for plaintiff, over objection, introduced the following testimony.

Witness A. J. Read, speaking of what he observed a day or two before the accident:

"Q. State what you saw, Mr. Read? A. The operator would endeavor to stop the elevator at a certain floor; and, instead of the floor of the elevator

† Rehearing denied August 9, 1909.

stopping on an even basis with the particular floor, it would go up probably from six inches to a foot, or would stop below that floor, and then the elevator would start, and it would start with such a jerk that it almost threw a person down. It almost threw me down.

"Q. What, if anything, did you notice with reference to his manipulation of the lever? A. His hand seemed to be pulling the lever back and forward all the time.

"Q. Do you know whether or not this young man was a regular elevator operator in that building? A. He was not.

"Q. You were acquainted with the other elevator operators—were you? A. I was.

"Q. Did you observe any difference between his management of the elevator and the management by the other operators? A. Yes, sir."

Witness G. W. Duvall:

"A. I had known this young boy for some time before this accident, and I had talked with him about being careful. He was nervous, and seemed to have trouble in stopping the cars on a level with the floor. He would often stop the car above the floor, and often below. He was quite nervous—both before the accident and afterwards."

Snavely, the deceased, was not a servant of the defendants, and hence was not a fellow servant of Corliss, the person operating the elevator. Counsel for defendants requested the court to charge the jury as follows:

"The court charges the jury that the charge in plaintiff's petition that the said defendants were negligent in employing an attendant who, on account of his youth, inexperience, and incompetency, was unfit to have charge of said elevator car in question is withdrawn from your consideration, and in arriving at your verdict you must disregard said charge of negligence in that respect."

At common law a master is not liable for injuries personally suffered by his servant through the ordinary risks of the business, including the negligence of a fellow servant, acting as such, while engaged in the same common employment, unless the master is chargeable with negligence in the selection of the servant in fault, or in retaining him after actual or constructive notice of his incompetency. The exception above mentioned to the nonliability of the master to his servant for the negligent acts of a fellow servant never had any existence as a substantive ground of liability except in favor of the servant. It is a part of the fellow-servant rule, and is inapplicable to any actions, except those brought by the servant against the master for injuries received by reason of the negligence of a fellow servant.

The master is liable to third persons for the damage caused by the wrongful or negligent acts of his servant in the course of his employment as such, and he is liable irrespective of the care used in the selection of that servant or of notice of his incompetency. It necessarily follows that the specification of negligence numbered 2, above mentioned, had no place in the petition, the evidence, or the charge of the court. Notwithstanding, however, evidence was admitted tending to show general incompetency of the person in charge of the elevator, and the jury were told by the court in its charge that it was the duty of defendants to employ a reasonably safe, prudent person, in the handling of the elevator. The liability of the defendants in the case at bar depended wholly upon the fact as to whether the per-

son operating the elevator was guilty of negligence at the time Snavely was passing from the elevator, which was the proximate cause of his death, except, of course, as this liability might be affected by the contributory negligence of Snavely himself. As the defendants could not relieve themselves from liability for the negligence of the operator of the elevator by showing that they exercised proper care in his selection or had no notice actual or constructive of his incompetency, so it was incompetent for plaintiff to attempt to fix a liability upon the defendants by showing want of care in the selection of the operator of the elevator or actual or constructive notice of his general incompetency. We are of the opinion that the admission of the testimony herein quoted taken in connection with the charge of the court in relation thereto was necessarily very prejudicial to the defendants. We are unable to say upon which specification of negligence the jury found for the plaintiff, but, if their verdict was based upon the negligence of the operator at the time of the accident, the evidence of his general incompetency may have determined the case against the defendants.

We are invited by error properly assigned, upon the denial of a motion made to the trial court, to review the whole evidence for the purpose of determining whether there is any substantial evidence in the record to support the verdict. But, as a new trial must be ordered in any event, we prefer, for reasons which need not be mentioned at this time to leave the question of the sufficiency of the evidence as a whole undetermined.

For error in refusing to instruct the jury as requested in the instruction before quoted the judgment of the trial court is reversed, and a new trial is ordered.

(172 Fed. 214.)

NORTH AMERICAN RY. CONST. CO. v. CINCINNATI TRACTION CO.

(Circuit Court of Appeals, Seventh Circuit. April 13, 1909.)

No. 1,483.

1. INDEMNITY (§ 9*)—CONSTRUCTION OF CONTRACTS—SCOPE AND EXTENT OF LIABILITY.

Contracts of indemnity, such as those given by a contractor for work done in public streets, are usually intended to provide against loss or liability of one party through the operations of the other, or caused by physical conditions which are under the control of the other, and over which the indemnified has no control, and are not ordinarily to be construed as covering liability for injuries or accidents the proximate cause of which is the negligence of the party indemnified.

[Ed. Note.—For other cases, see Indemnity, Cent. Dig. § 16; Dec. Dig. § 9.*]

2. INDEMNITY (§ 9*)—CONSTRUCTION OF CONTRACT—SCOPE OF LIABILITY.

A contract for the rehabilitation of the tracks of a street railroad company, the work to be done without interfering with the operation of its cars, provided that the contractor should indemnify the company against all suits brought against it on account of claims for damages done or caused in the course of construction of the work, "or in consequence thereof," including injury to persons, land, or buildings. At a place where

the company switched its east-bound cars onto the west-bound track to pass around a long excavation, 14 inches in depth, made by the contractor for replacing the east-bound track, a car was stopped in the night between street crossings, and a passenger alighting on the right-hand side fell into the excavation and received injuries for which she recovered a judgment against the company. *Held*, that the injury was not one received "in consequence" of the contractor's work, but was proximately due to the negligence of the company's employés operating the car, who with knowledge of the excavation permitted the passenger to alight on that side of the car at an unusual place, and that the company could not recover over on its indemnity contract.

[Ed. Note.—For other cases, see Indemnity, Cent. Dig. § 16; Dec. Dig. § 9.*]

In Error to the Circuit Court of the United States for the Eastern Division of the Northern District of Illinois.

The writ of error is to reverse a judgment founded upon a directed verdict in favor of the defendant in error, a traction company, against plaintiff in error, a construction company, for the sum of six thousand seven hundred dollars—the direction being given at the conclusion of all the evidence.

The action was by the traction company against the construction company, upon a contract under which the construction company was to rehabilitate the tracks of the traction company. And the particular provisions of the contract relied upon as the basis of the action, were the following:

"The said contractor will be required to take at his own expense all precautions against accidents such as maintaining lights, barricades, etc., as are required by laws and building regulations of Cincinnati or the orders of the said engineer which may be issued from time to time or by reasonable prudence and shall be responsible for all damages resulting from omission in this regard."

"The said contractor further agrees to protect, indemnify and save harmless the said company from all suits and actions which may be brought against the said company and from and against all claims of any kind for damages done or caused in the course of construction of the work provided for by this contract, or in consequence thereof, in any manner, including all damages and injury to persons, to land or buildings, all injuries to animals or vehicles or to any property whatever."

"Street Traffic, Guards and Lights.

"The said Contractor must provide plank sidewalks or bridges, properly fastened, having railing on each side, and in all respects to conform to all city regulations for keeping the streets open for travel and traffic.

"All construction herein provided for must be carefully guarded by ropes or timber barricades, and must be lighted at night by a sufficient number of red lights.

"All material along the sidewalk or roadway must be guarded and lighted as above provided."

The action here is an action over, growing out of an action brought by one Mary F. Whitteker in the Superior Court of Cincinnati, Ohio, against the traction company, wherein she obtained a judgment for six thousand dollars on account of injuries received by her in alighting from one of the traction company's cars—the construction company having had due notice of such action and having been requested to participate in its defense.

The principal facts upon which the Cincinnati judgment was founded are agreed upon as follows: The work of rehabilitating the traction company's tracks—a work that was to go on without interrupting the traction company's operation of cars—left in Madison Road in Cincinnati at the time and place where the accident occurred, where the eastbound track was being replaced, an excavation about one thousand feet in length, eleven and one-half feet wide, and fourteen inches deep, which excavation was at the time and place named, shunted by the eastbound car being switched to the westbound rails at the

western end of the excavation, and passing along those rails to the eastern end of the excavation, being there switched back to the eastbound track. The time when the accident occurred was half past ten at night; the car was one of a type known as summer or open car, thirty feet long, with reversible seats running transversely across the entire width of the car. A footboard ran along each side of the car a few inches below the floor. There was no guard-rail or other guard on either side of the car. Mary F. Whitteker was a passenger on the eastbound car—the car being at the time in charge of a conductor and motorman employed by the traction company. She sat at the extreme south end of the seat, third from the front (the side of the car that when it stopped. was next to the excavation) and when the car was stopped in obedience to her signal, stepped to the running-board, and from there into the excavation, from which she received the injuries upon which her suit was brought. The traction company knew of the existence of the excavation, and its exact location, but no ropes or bars were put in place, on the side of the car next to the excavation, during the time that the same was being passed, to prevent passengers from alighting on that side.

All these are facts agreed upon in stipulation between the parties. It was further agreed that the precise point at which the car stopped, was a "controverted question," but there was no controversy that the point at which the car stopped was outside any street crossing—the testimony of some of the witnesses being that the car stopped almost immediately after it had passed over Cleinview Avenue, and of some, that it stopped some distance after it had passed that avenue; all the witness agreeing that Cleinview Avenue had been crossed before the car stopped.

The excavation at the point where Mrs. Whitteker got off, was marked by red lights, but had no rope or railing around it.

Edgar B. Tolman, for plaintiff in error.

William E. Church, for defendant in error.

Before GROSSCUP, BAKER, and SEAMAN, Circuit Judges.

GROSSCUP, Circuit Judge (after stating the facts as above), delivered the opinion.

Contracts of indemnity such as the one here sued upon, are usually intended to provide against loss or liability of one party, through the operations of the other, or caused by physical conditions that are under the control of the other—over which the party indemnified has no control, and the party indemnifying has control. Indeed, it would take clear language to show that a contract of indemnity was intended to cover conditions or operations under the control of the party indemnified, and not under the control of the indemnifying party. such, for instance, as accidents, the proximate cause of which is the negligence of the party indemnified.

The provision of the contract under consideration provides that the rehabilitation contractor agrees to indemnify the traction company against all suits brought against it on account of claims for damages done or caused in the course of construction of the work, "or in consequence thereof," including injury to persons, lands or buildings. The injury to Mrs. Whitteker was not caused in course of construction of the work. It must therefore fall, if it falls at all, within the clause "or in consequence thereof," that is to say the injury must be in the line of direct cause and effect of the work done, or the conditions created, by the indemnifying party.

The facts before us do not disclose that such was the case. Proximate cause is the wrongful act that caused the injury, usually the first

wrongful act that starts the party injured on his way to the injury. That act, in this case, was the negligence of the traction company in allowing Mrs. Whitteker to get off on the wrong side of the car, the side next to the excavation. True, if the excavation had not been there, the negligence of the traction company might not have resulted in injury. But the excavation was not wrongfully there, and was not, as against the traction company, wrongfully left unmarked and unlighted. The responsibility of the traction company for the injury in this case—the place where Mrs. Whitteker fell into the excavation being away from any street crossing or other line of travel—is not different from what it would have been had the traction company picked up Mrs. Whitteker on the sidewalk adjacent and carried her to the excavation where she fell in. In no view of this case can we see the proximate cause of the injury as other than the wrongful act of the traction company in depositing Mrs. Whitteker where she was deposited.

Upon these facts, and with this view of the true intent and meaning of the contract of indemnity between the parties, there is in our judgment no cause made for liability, and the Circuit Court was in error in instructing the jury to bring in a verdict for the defendant in error. The judgment of the Circuit Court is reversed with instructions to grant a new trial, and to proceed further in accordance with this opinion.

(172 Fed. 217.)

WOMACK v. HICKS LOCOMOTIVE & CAR WORKS.

(Circuit Court of Appeals, Seventh Circuit. April 13, 1909.)

No. 1,442.

1. MASTER AND SERVANT (§ 288*)—MASTER'S LIABILITY FOR INJURY TO SERVANT—ASSUMPTION OF RISK.

Plaintiff was employed in the car manufacturing and repairing works of defendant, and was sent by a foreman with another employé to put pin lifters on cars then standing on switch tracks in the yards, and while so at work was injured when the string of cars on which he was working was moved by a switch engine from the opposite end. It appeared that it was customary, when workmen were working on cars on any of such tracks, to put up a signal flag to warn the engineer; but plaintiff had not worked there before, and was not given a flag, nor instructed to use one. *Held*, that he could not be charged with having assumed the risk as matter of law; it being the duty of defendant to see that proper action was taken to make the place safe.

[Ed. Note.—For other cases, see Master and Servant, Cent. Dig. § 1071; Dec. Dig. § 288.*

Assumption of risk incident to employment, see note to Chesapeake & O. R. Co. v. Hennessey, 38 C. C. A. 314.]

2. MASTER AND SERVANT (§ 289*)—INJURY TO SERVANT—CONTRIBUTORY NEGLIGENCE.

Plaintiff in such case was not chargeable with contributory negligence as a matter of law.

[Ed. Note.—For other cases, see Master and Servant, Cent. Dig. 1089; Dec. Dig. § 289.*]

In Error to the Circuit Court of the United States for the Eastern Division of the Northern District of Illinois.

The facts are stated in the opinion.

Lee D. Mathias, for plaintiff in error.

Ralph M. Shaw, for defendant in error.

Before GROSSCUP, BAKER, and SEAMAN, Circuit Judges.

GROSSCUP, Circuit Judge, delivered the opinion.

The action was for damages for injuries growing out of the alleged negligence of defendant in error in not giving to plaintiff in error, its employé, a safe place in which to work. At the conclusion of plaintiff's evidence an instructed verdict for defendant was returned, upon which judgment was entered. To reverse this judgment the writ of error is prosecuted.

The question presented is, whether there was evidence tending to show the plaintiff in error's right to recovery. Defendant in error is engaged in the business of manufacturing and repairing freight cars. For more than a year, and until two or three days before the injury, plaintiff in error was an employé in the locomotive company's shops. The plant is located at Chicago Heights, and covers a tract of ground about a quarter of a mile square, containing, besides the shops, six railroad tracks, all of which diverge from one main track, used for the purpose of storing and repairing cars. The entrance to the track is through a gate in the fence enclosing the grounds.

On the day before the injury, plaintiff in error was taken by the assistant general foreman of the shops, from the shops to the tracks outside, to certain cars standing on the tracks, and directed, commencing on the west end of a string of flat cars on track No. 3, and passing over, when they were finished, to another string of cars on track No. 2, to put in pin lifters on the end of each car. The work on the cars on track No. 3 having been finished, plaintiff in error, with a fellow workman, passed immediately over, under the instruction received the day before from the assistant foreman to track No. 2, working backward upon that track upon the string of cars, some eighteen or more in number. It was at this time that the injury was received, due to the backing of a switch engine operated by defendant in error against the west end of a string of cars on track No. 2, between two of which the plaintiff in error was working. The evidence shows that the backing of this switch engine was done without warning, and that the physical situation was such that plaintiff in error did not see the danger to which he was exposed, there being eighteen or nineteen cars between him and the engine.

The plaintiff in error, as has been already said, was new to this class of outdoor work. He had, according to his own testimony, received no instructions or directions respecting the putting up of flags or signals, or any other precautions to prevent what occurred. He knew from what he had observed passing to and fro, that the switch engine operated frequently upon these tracks, and that flags were from time to time set up upon the tracks, but he had never been told and did not know (accepting his own testimony as we must on this hearing) that

these flags were used as signals not to operate upon a given track, or that the repairers were expected to put up such signals.

The contention of defendant in error, and the view adopted by the court below, was that plaintiff in error's knowledge that the switch engine frequently operated on these tracks was enough to put him into such a relation to the defendant in error that whatever risks he took in going between the cars were assumed, and that going between the cars without putting up a precautionary flag was contributory negligence. We cannot concur in this view. To begin with, it was the duty of defendant in error to provide the plaintiff in error with a reasonably safe place in which to perform his work. Doubtless the putting into his possession of a flag or other signal, with instructions as to its purposes, would be a compliance with this duty in cases where accident occurred through the employé's failure to use the flag. But in the case under consideration no such signal was provided, and no such instruction given. For all that the evidence discloses, plaintiff in error reasonably may have supposed that the company, in some other way, was performing its duty to provide him a safe place in which to do his work. Indeed, on the day previous when he was set to work, the assistant foreman said (according to the assistant foreman's testimony) that he would attend to the setting of the flags. There is nothing in the evidence that brings knowledge home to him that no such provision was being made. And whatever his knowledge otherwise, he had no knowledge, upon the evidence under consideration, that an engine or cars would be moved on the track where the repairing was going on.

These facts entirely distinguish this case from Southern Pacific Company v. Poole, 160 U. S. 438, 16 Sup. Ct. 338, 40 L. Ed. 485, upon which the defendant in error chiefly relies, for, in that case—the case of a repairer who had gone under the last car of a train which was due to start in a short time—the going under the car was "with a certainty that a caboose was to be attached to the rear"—in other words, a certain knowledge of what was about to occur that called upon him to put out a flag or some other signal of warning. And the other cases cited are cases in which either from actual instruction, or from long experience in connection with the work, the party injured must have known of the danger to which he was exposing himself in the absence of a flag or other signal. Indeed it is just at this point—the presence of such knowledge in the cases cited, and the absence of such knowledge in this case—that this case differs from the cases relied upon by defendant in error.

The judgment of the Circuit Court is reversed with instructions to grant a new trial, and to proceed further in accordance with this opinion.

(172 Fed. 340.)

SKUBINSKY et al. v. BODEK.

(Circuit Court of Appeals, Third Circuit. May 24, 1909.)

No. 16.

BANKRUPTCY (§ 114*)—AUTHORITY OF RECEIVER—REFUSAL OF BANKRUPT TO SURRENDER PROPERTY TO AGENT—CONTEMPT.

It is at least doubtful whether a receiver appointed for the property of an alleged bankrupt on the filing of an involuntary petition against him, in the absence of an express provision to that effect, can delegate to another his authority originally to take possession of the property; and in any event the alleged bankrupt or members of his family cannot be held in contempt of court for a refusal to surrender property or books and papers to one claiming to represent the receiver, but who produces no written evidence of his authority.

[Ed. Note.—For other cases, see Bankruptcy, Cent. Dig. § 166; Dec. Dig. § 114.*]

Appeal from the District Court of the United States for the Eastern District of Pennsylvania.

Appeal from order adjudging petitioners in contempt.

Clinton O. Mayer, for appellants.

Alfred Aarons and Henry N. Wessel, for appellee.

Before GRAY and BUFFINGTON, Circuit Judges, and BRADFORD, District Judge.

BRADFORD, District Judge. This proceeding, although termed a petition for review, is in substance an appeal from an order of the District Court of the United States for the Eastern District of Pennsylvania, adjudging Fritz Skubinsky, an alleged bankrupt, and his wife, Fanny Skubinsky, in contempt, and imposing fines on them. For it not only appears that the petitioners prayed for and were allowed an appeal from the order in question, but the case as it is presented to us presents matter of fact as well as of law. A petition in involuntary bankruptcy was filed by Wolf Bodek and others against Fritz Skubinsky November 3, 1908, and on the same day Bodek was appointed receiver of the estate of the alleged bankrupt. The order of appointment authorized and directed the receiver to cause an inventory and appraisement of such assets and effects as should come into his possession to be made and directed the alleged bankrupt forthwith to turn over and deliver to the receiver all books, papers, deeds and documents bearing upon or relating to his business and affairs. After duly qualifying for the discharge of his duties as receiver Bodek presented November 6, 1908, a petition to the court below in which, among other things, it was in substance alleged that the petitioner in accordance with the directions contained in the order appointing him went to the former place of business of the alleged bankrupt at No. 703 South street, Philadelphia, for the purpose of performing his duty; that the alleged bankrupt and his wife and one Dubin, together with the children of the alleged bankrupt and his wife, interfered with the receiver "in the performance of his duties, concealing prop-

erty from him, interfering with his search for goods in the premises 703 South street, hindering him in his attempt to secure the papers which were at said premises," and further, that the receiver's "representatives and deputies were assaulted by the persons above mentioned"; that "large quantities of the papers bearing upon the business of the alleged bankrupt were unlawfully destroyed by the parties above mentioned"; and that "when your petitioner undertook to take possession of large quantities of goods which had been hidden in the dwelling portions of the premises aforesaid, the said alleged bankrupt, his wife and the said Dubin, attempted to prevent him from taking possession of said goods, and again assaulted his representatives and created great disturbance." The petition concluded with a prayer for an attachment returnable forthwith against the alleged bankrupt, his wife and Dubin for contempt. On the same day, November 6, 1908, the alleged bankrupt and his wife, not having been served with process, voluntarily appeared, and evidence having been adduced and heard they were adjudged guilty of contempt, and it was ordered that Skubinsky pay a fine of $100 and "all costs of the proceedings on attachment, including stenographer's fees and charges," and his wife a fine of $150.

It appears from the record, and is not denied, that the receiver was not personally present at the time and place of the commission of the alleged contempt. He had requested his partner in business, Joseph J. Rabinovitch, to act for him on the occasion by way of discharging his duties as receiver. Rabinovitch did not obtain from the receiver any written instrument authorizing or purporting to authorize him to act in the place and stead of the receiver; but he took with him and exhibited and explained to the alleged bankrupt and his wife on the premises a certified copy of the appointment of the receiver which he had procured from the clerk's office. The order of appointment of the receiver in the present instance did not in terms authorize him to constitute agents for the purpose of originally acquiring possession of the property and assets of the alleged bankrupt in the absence of their principal, and it is at least doubtful whether there was any authority on the part of Rabinovitch acting as the alleged agent or representative of the receiver to assert and enforce the authority conferred upon the latter under his appointment. Authority to appoint and act through agents or custodians for the preservation and management of the property of a bankrupt after the receiver has once taken possession seems quite distinguishable from authority to create an agency for the original taking of possession. Authority of the former kind in many instances, without express provision, may be implied from the fact of the constitution of the receivership. But we are not prepared, nor is it necessary, to hold that a receiver can in the absence of a provision to that effect, delegate to another his authority originally to acquire possession. Other considerations are decisive.

Contempt proceedings in such a case as the present are quasi criminal in their nature and it should be made clearly to appear that the persons charged knowingly and wilfully disregarded or set at defiance the order of the court. The order of appointment did not direct that

any portion of the estate of the alleged bankrupt should be turned over to Rabinovitch or to any alleged agent of the receiver. It provided that the alleged bankrupt should "forthwith turn over and deliver to the said receiver all books, papers, deeds and documents bearing upon or relating to his business and affairs." If it be assumed that the receiver had power to appoint and did appoint Rabinovitch to act for him on the occasion in question, Rabinovitch made no sufficient disclosure to the alleged bankrupt or his wife of the existence of such authority. He did not show them any instrument in writing purporting to confer it, and they were under no obligation to accept as true his mere oral assertion, or that of the witness Sternberger, that Rabinovitch had been authorized by the receiver. Indeed, the fact that a certified copy of the order appointing the receiver was exhibited and explained to them, justified them in refusing to turn over any portion of the estate of the alleged bankrupt to any other person than the receiver named in such order, in the absence of evidence satisfactory to them that such other person had authority to enter into possession in behalf of the receiver. It appears from the evidence that some bills or other papers presumably relating to the business and affairs of the alleged bankrupt were torn or destroyed at the time Rabinovitch undertook to enter into possession. If those bills or papers, after the certified order of appointment had been exhibited and explained, had been wilfully torn up by the alleged bankrupt and his wife, or either of them, for the purpose of destroying all evidence of their contents, the case would have presented a materially different aspect. This aspect, however, we are not called on to discuss or consider; for, notwithstanding some loose testimony given by Rabinovitch, we are, from the evidence, inclined to believe that whatever papers were torn or mutilated by the appellants or either of them were so torn or mutilated in a struggle with Rabinovitch, not for their destruction, but for their possession, to which they were entitled in the absence of a sufficient disclosure to them of authority on the part of Rabinovitch to demand and remove the same. The evidence falls short of the clear proof required to establish a wilful defiance by the alleged bankrupt and his wife, or either of them, of the authority of the court below.

The order appealed from, therefore, must be reversed, with costs, and it is so ordered.

(172 Fed. 342.)

BARUCH v. UNITED STATES.

(Circuit Court of Appeals, Second Circuit. May 25, 1909.)

No. 245 (4,419).

CUSTOMS DUTIES (§ 32*) — CLASSIFICATION — "BINDINGS" — FEATHERSTITCH BRAIDS.

Braids used as bindings are specially provided for as "bindings" in Tariff Act July 24, 1897, c. 11, § 1, Schedule I, par. 320, 30 Stat. 179 (U. S. Comp. St. 1901, p. 1661), and, though commercially known as "featherstitch braids," are therefore removed from the provision for "braids

* * * not elsewhere specially provided for," in Schedule J, par. 339, 30 Stat. 181 (U. S. Comp. St. 1901, p. 1662).

[Ed. Note.—For other cases, see Customs Duties, Dec. Dig. § 32.*]

Appeal from the Circuit Court of the United States for the Southern District of New York.

For opinion below, see 159 Fed. 294.

This is an appeal taken by an importer from a decision of the Circuit Court, Southern District of New York (159 Fed. 294), affirming a decision of the Board of General Appraisers, which affirmed a decision of the collector that certain imported merchandise, consisting of various loom-woven fabrics, was dutiable as braids under paragraph 339 of the tariff act of 1897 (Act July 24, 1897, c. 11, § 1, Schedule J, 30 Stat. 181 [U. S. Comp. St. 1901, p. 1662]). The merchandise is of three classes, shown in Exhibits A, B, and C. The importer concedes that the broad articles, shown in Exhibit C, were properly assessed under paragraph 339, but contends that the narrow articles, illustrated in Exhibits A and B, should have been assessed as "bindings" under paragraph 320 of said tariff act.

The two paragraphs in question follow, and, as the development of the legislation is of importance, they are shown in parallel columns with the corresponding paragraphs of the tariff acts of 1890 (Act Oct. 1, 1890, c. 1244, 26 Stat. 567), and 1894 (Act Aug. 27, 1894, c. 349, 28 Stat. 509):

Act of 1890.	Act of 1894.	Act of 1897.
354. Cotton cords, braids, boot, shoe, and corset lacings, thirty-five cents per pound; cotton gimps, galloons, webbing, goring, suspenders, and braces, and of the foregoing which are elastic or non-elastic, forty per centum ad valorem: Provided, that none of the articles included in this paragraph shall pay a less rate of duty than forty per centum ad valorem.	263. Cords, braids, boot, shoe and corset lacings, tapes, gimps, galloons, webbing, goring, suspenders and braces, woven, braided, or twisted lamp or candle wicking, lining for bicycle tires, spindle binding, any of the above made of cotton or other vegetable fiber and whether composed in part of India rubber or otherwise, forty-five per centum ad valorem.	320. Bandings, beltings, bindings, bone casings, cords, garters, lining for bicycle tires, ribbons, suspenders and braces, tapes, tubing, and webs or webbing, any of the foregoing articles made of cotton or other vegetable fiber, whether composed of in part of india-rubber or otherwise, and not embroidered by hand or machinery, forty-five per centum ad valorem; spindle banding, woven, braided or twisted lamp, stove, or candle wicking made of cotton or other vegetable fiber, ten cents per pound and fifteen per centum ad valorem; loom harness or healds made of cotton or other vegetable fiber, or of which cotton or other vegetable fiber is the component material of chief value, fifty cents per pound and twenty-five per centum ad valorem; boot, shoe, and corset lacing made of cotton or other vegetable fiber, twenty-five cents per pound and fifteen per centum ad valorem; labels, for garments or other articles composed of cotton or other vegetable fiber, fifty cents per pound and thirty per centum ad valorem.
373. Laces, edgings, embroideries, insertings, neck ruffings, ruchings, trimmings, tuckings, lace window curtains, and other similar tamboured articles, and articles embroidered by hand or machinery, embroidered and hemstitched	276. Laces, edgings, nettings and veilings, embroideries, insertings, neck ruffings, ruchings, trimmings, tuckings, lace window curtains, tamboured articles, and articles embroidered by hand or machinery, embroidered handkerchiefs, and ar-	339. Laces, lace window curtains, tidies, pillow shams, bed sets, insertings, flouncings, and other lace articles; handkerchiefs, napkins, wearing apparel, and other articles, made wholly or in part of lace, or in imitation of lace; nets or

handkerchiefs, and articles made wholly or in part of lace, ruffings, tuckings, or ruching, all of the above-named articles, composed of flax, jute, cotton, or other vegetable fiber, or of which these substances or either of them or a mixture of any of them is the component material of chief value, not specially provided for in this act, sixty per centum ad valorem: Provided, that articles of wearing apparel, and textile fabrics, when embroidered by hand or machinery, and whether specially or otherwise provided for in this act, shall not pay a less rate of duty than that fixed by the respective paragraphs and schedules of this act upon embroideries of the materials of which they are respectively composed.

ticles made wholly or in part of lace, ruffings, tuckings, or ruchings, all of the above-named articles, composed of flax, jute, cotton, or other vegetable fiber, or of which these substances or either of them, or a mixture of any of them, is the component material of chief value, not specially provided for in this act, fifty per centum ad valorem.

nettings, veils and veilings, etamines, vitrages, neck ruffings, ruchings, tuckings, flutings, and quiltings; embroideries and all trimmings, including braids, edgings, insertings, flouncings, galloons, gorings and bands; wearing apparel, handkerchiefs, and other articles or fabrics embroidered in any manner by hand or machinery, whether with a letter monogram or otherwise; tamboured or appliqued articles, fabrics or wearing apparel; hemstitched or tucked flouncings or skirtings, and articles made wholly or in part of ruffings, tuckings or ruchings, all of the foregoing, composed wholly or in chief value of flax, cotton, or other vegetable fiber and not elsewhere specially provided for in this act, whether composed in part of india-rubber or otherwise, sixty per centum ad valorem: Provided, that no wearing apparel or other article or textile fabric, when embroidered by hand or machinery, shall pay duty at a less rate than that imposed in any schedule of this act upon any embroideries of the materials of which embroidery is composed.

Bindings appeared for the first time in the act of 1897, when they were inserted in paragraph 320. Braids at the same time were inserted in paragraph 339. In the provisions of the acts of 1890 and 1894 the word "braid" appeared without words of limitation. In paragraph 339 it is followed by the restriction "not elsewhere specially provided for in this act." The articles in the paragraphs at the head of the parallel column (paragraph 354 of the act of 1890; paragraph 263 of the act of 1894, and paragraph 320 of the act of 1897) are primarily articles of utility, not inappropriately designated in the brief of the importer as "notions." The other paragraphs embrace articles which are primarily for the purpose of ornamentation.

Comstock & Washburn (Albert H. Washburn, of counsel, and J. Stuart Tompkins and George J. Puckhafer, on the brief), for importers.

J. Osgood Nichols, for the United States.

Before LACOMBE, WARD, and NOYES, Circuit Judges.

NOYES, Circuit Judge (after stating the facts as above). The merchandise in question consists of narrow woven strips bearing "featherstitch" or "herringbone" ornamentation. Their practical use is to cover seams. They are inexpensive, and are largely used in making infants' clothing and underwear. The featherstitch ornamentation improves the appearance of the garment, and is added for that purpose. But the primary purpose of the article is one of utility.

This article has borne various names, such as "seam binding," "featherstitch binding," "featherstitch tape," etc.; but the name by

which it has usually been called is "featherstitch braid." Indeed, while the article is not braided, but woven, we should have little difficulty in adopting the conclusion of the Circuit Court and of the Board of Appraisers that prior to 1897 it was generally commercially designated as "featherstitch braid." But this is not a case in which the finding of a commercial designation carries us far. The question is, not whether the articles are braids, but whether they are braids not elsewhere specially provided for in the act. Manifestly commercial designation can have no bearing upon the latter inquiry. It cannot be said that the phrase "braids not otherwise specially provided for" had any commercial meaning—different from the common understanding—including this merchandise. The articles may be called "featherstitch braids"; but, if some braids are bindings, it is not inconsistent with the commercial designation to assess them under the binding paragraph.

Had this question arisen under the tariff acts of 1890 or 1894, the situation would be entirely different. As we have seen, the word "braid" was used in those acts without words of limitation or qualification. If in a case under either of those acts it had been shown that an article was commercially known as a "braid," it would have necessarily brought it within the statute. But an article is not necessarily brought within paragraph 339 by showing that it is a braid. It may be a braid without question—may have been made upon a braiding machine; but, if it is more specially provided for elsewhere, it is not included. Accepting the commercial designation of these articles as featherstitch braids, we only reach the conclusion that they should be classified under paragraph 339 if they are not more specifically provided for elsewhere.

Now, the following definition of the word "binding" appears in the Standard Dictionary:

> "A braid or strip folded and sewed on the edge of any fabric, or sewed over the place where two parts are joined, so as to protect and secure the parts covered by it."

It thus appears that a binding may be a braid used or adapted to be used for a particular useful purpose. Many kinds of braid are not adapted to this use. They are employed for ornamental purposes solely. Braids of this character should be classified under paragraph 339. And, as we have seen, this classification would be especially appropriate, as that paragraph and those corresponding to it in the earlier acts have always applied particularly to articles of ornamentation. But these featherstitch braids, being used for the purpose of binding seams, are, in our opinion, the kind of braids properly called bindings. And we think that it may fairly be assumed that, when Congress inserted the word "bindings" in the "notions" paragraph and transferred the word "braid" to the "trimmings" paragraph with words of qualification, it intended to embrace in the latter paragraph only such braids as were not bindings. If the articles are bindings, as well as braids, the provision in the "notions" paragraph is the more specific. Bindings are embraced without the words of restriction or qualification. These articles as bindings are necessarily included, and they are specially provided for elsewhere than in paragraph 339.

This discussion of the case upon principle leads us to the conclusion that the merchandise should have been assessed for duty as bindings under paragraph 320; and we reach no different result from an examination of other cases, although the question of the classification of this merchandise has been before the courts several times and conflicting decisions have been rendered. In the case of In re Dieckerhoff (C. C.) 54 Fed. 161, it was held that these articles were dutiable as cotton braids under the section of the act of 1890 first quoted, and not as cotton trimmings under the second section quoted. This decision, however, has no special bearing upon the question now under consideration because, as we have seen, bindings were not provided for in the act of 1890. Featherstitch braids may well not be trimmings within the ornamental article paragraph of the earlier act and yet be bindings within the useful article paragraph of the act of 1897.

The government, however, insists that in view of the Dieckerhoff decision it must be presumed that, when Congress used the word "braids" in the act of 1897, it intended that it should apply to featherstitch braids. As just pointed out, however, all that that case held was that the articles were braids and not trimmings. It did not hold that they were not bindings. And Congress used the word "braid" only with words of qualification. We see no force in the contention. Aside from the Dieckerhoff decision under the act of 1890 the question here presented has been decided both ways by the Circuit Court. In Steinhart v. United States (C. C.) 121 Fed. 442, it was held that the articles, if braids, were bindings also, and therefore dutiable under paragraph 320. This decision was followed in The Hague Case which does not appear in the Federal Reporter.[1] In the case of Von Baur v. United States (C. C.) 141 Fed. 439, the question was again presented and decided the other way. The opinion of the board holding that the articles were braids under paragraph 339 was affirmed without opinion by the Circuit Court. We find the reasoning in the Steinhart decision persuasive, and, for reasons already stated, fail to find that the additional evidence requires any different conclusion.

The decision of the Circuit Court is reversed

(172 Fed. 346.)

CANADIAN NORTHERN RY. CO. v. WALKER.

(Circuit Court of Appeals, Eighth Circuit. July 12, 1909.)

No. 2,956.

1. MASTER AND SERVANT (§§ 135, 137*)—METHODS OF OPERATION DISCRETIONARY —REASONABLE SELECTION NOT NEGLIGENCE.

A railroad company, which selects a customary method of operation or construction which is neither palpably unreasonable nor clearly dangerous, owes its servants no duty to adopt a different method, and it is not guilty of negligence for a failure to do so.

Its officers have and must exercise discretion and judgment in the selection of such methods, and their decisions of doubtful questions re-

[1] No opinion filed.

garding such matters are presumptively right and may not be held to constitute actionable negligence, in the absence of clear proof to that effect.

[Ed. Note.—For other cases, see Master and Servant, Cent. Dig. § 271; Dec. Dig. §§ 135, 137.*

Duty of railroad companies to furnish safe appliances, see note to Felton v. Bullard, 37 C. C. A. 8.]

2. MASTER AND SERVANT (§ 111*)—RAILROAD COMPANIES NOT LIABLE FOR NEGLIGENCE OF SHIPPERS IN REMOVING MEANS OF LOADING.

A railroad company is not liable to its servants for the negligence of shippers in their use and removal of instrumentalities for loading and unloading cars which form temporary obstructions to the safe movement of the cars.

[Ed. Note.—For other cases, see Master and Servant, Cent. Dig. §§ 215–217; Dec. Dig. § 111.*]

3. MASTER AND SERVANT (§ 111*)—LEAVING DUTY TO REMOVE MEANS OF LOADING TO SHIPPERS NOT NEGLIGENCE.

A railroad company is not guilty of negligence because it leaves to shippers who use them the duty of removing from its cars necessary instrumentalities for loading or unloading them which form temporary obstructions near them, and to its servants who move the cars the duty to see that loading or unloading is not in progress just before they start the cars.

[Ed. Note.—For other cases, see Master and Servant, Cent. Dig. §§ 215–217; Dec. Dig. § 111.*]

4. MASTER AND SERVANT (§ 278*)—FACTS—CONCLUSION—SAFE PLACE TO WORK.

A railroad company provided a cattle pen, a platform, and means to form a temporary chute from the pen to the door of the car to enable shippers to load stock into the car. A gate which opened from the pen upon the platform formed, when open, one side of this chute and extended to within four or five inches of the car. The company left the duty of loading and unloading their stock and of closing this gate when they had completed their work to the shippers, and the duty to ascertain, just before the cars were started, whether or not any loading or unloading was in progress to the plaintiff. He could not have discharged that duty without learning that the gate was open. He did not discharge that duty. He knew the method of using the gate, and that if it was open it would strike one riding on the ladder on the side of one of the cars toward the gate; but he did not think of the gate, and when he had failed to make his inspection, and the cars started, he rode along on the side of the ladder of one of them until the open gate knocked him off.

Held, the company was not guilty of any lack of ordinary care to provide the plaintiff with a reasonably safe place in which to discharge the duties of his employment.

[Ed. Note.—For other cases, see Master and Servant, Cent. Dig. §§ 954–972; Dec. Dig. § 278.*]

(Syllabus by the Court.)

In Error to the Circuit Court of the United States for the District of Minnesota.

Pierce Butler (How, Butler & Mitchell and Clark, Sweatman & McIntyre, on the brief), for plaintiff in error.

Humphrey Barton, for defendant in error.

Before SANBORN and VAN DEVANTER, Circuit Judges, and POLLOCK, District Judge.

SANBORN, Circuit Judge. At about 11 o'clock on the dark rainy night of August 15, 1907, the plaintiff below, a switchman in the employment of Canadian Northern Railway Company, the defendant below, was knocked off of a ladder on the side of a freight car by the end of an open gate which, when open, formed one of the sides of a cattle chute and when shut closed an opening in a cattle pen in the yards of the company at Winnipeg. He recovered a judgment against the defendant, which his counsel seeks to sustain on the ground that there was substantial evidence that the company failed to furnish a suitable fastening for the gate, and that it did not provide a gateman or make any other provision to close the gate and keep it closed when shippers were not loading or unloading stock, and that for these reasons it failed to exercise ordinary care to furnish the defendant in error with a reasonably safe place in which to work.

The only evidence concerning the fastening was testimony that the company had so placed a strand or hoop of wire upon the post against which the swinging end of the gate shut that this strand could be dropped over the post in that end of the gate in such a way that it would hold the gate closed, and the testimony of one witness who said that this wire would hold the gate when the wind was not blowing, that it was liable to work off the top of the gate post, but that he had never known it to do so. The legal presumption and the proof were therefore that the company provided a strand of wire that would hold the gate closed. The mere opinion of a single witness, who never saw the wire work off the top of the gate post and never knew that it ever did so, that it was liable to do so, constituted no substantial evidence that this fastening was not adequate, or that the company was guilty of any breach of duty here, and no judgment for its negligence can stand upon a foundation so flimsy.

Was the company guilty of any breach of duty to the plaintiff because it furnished no gateman and made no other provision to close the gate and keep it closed when shippers were not loading or unloading their stock? The true answer to this inquiry is conditioned by the facts of the case in hand, and, if we resolve all conflicts in the testimony and all doubtful inferences in favor of the plaintiff, those facts are these: On the north side of a spur track in the company's yard were two cattle chutes and platforms, and west of these a platform for loading general merchandise. Cars were usually placed on this track daily to be unloaded and loaded over these platforms. They were pulled out toward the east once every night between the hours of 10 p. m. and 1 a. m. that they might be attached to a train which departed at 1:15 a. m. Shippers were accustomed to load the cars as late in the night as they could do so and get through their work before the cars were taken away. Hence it became necessary for the servants of the company who took the cars out, and it was their duty, to inspect the cattle chutes and platforms just before they moved the cars in order that they might be certain that no loading or unloading was in progress and that the cars were clear. The accident occurred at the west cattle chute. This chute was upon a platform which extended from a cattle pen to about 10 inches from the car and was upon about the same plane as the floor of the car. Gang or toe planks

were provided to cover the space between the platform and the car which were placed for the cattle to walk upon and were subsequently removed by the shippers. A permanent fence about five feet high reached from the post against which the gate closed to a point about three feet distant from the car, and this fence and loose boards, which were placed by the shippers between it and the car before they loaded or unloaded cattle, formed the east side of the chute, while the gate, when open, extended to within four or five inches of the car and formed its west side. The shippers uniformly placed the loose boards and opened the gate to load and unload their stock and removed the boards and swung the gate out of the way of the cars and closed it after they had completed their work of loading or unloading.

The plaintiff entered the employment of the company as a member of a night crew in this yard on November 24, 1906, and worked there with the exception of four days until the accident on August 15, 1907. In order of their rank those connected with the work in which the plaintiff was engaged were the yardmaster, the foreman, the engineer, the man who followed and coupled and uncoupled the engine, and the fieldman, whose duty it was to inspect the platforms, cattle chutes, and cars just before the latter were taken off this spur track, and to see that no loading or unloading was in progress. At the time of the accident the plaintiff was this fieldman. He had followed the engine in this yard from November until July, had then been foreman, and on the day of the accident one Rice had been made the foreman and he had become the fieldman. He had frequently watched and waited for the shippers when they were loading cars and had seen them, after they finished their loading or unloading, remove the gang planks and the loose boards on the east side of the chute and swing the gate out of the way of the car and tip the toe planks toward it. He knew that different shippers used the gate and planks on different nights to guide stock into the cars, that if the gate was open it would strike one riding past it on the ladder upon the side of a car toward the gate, and that the only way to determine whether or not shippers were loading or unloading stock, and whether or not the side of the train was clear of temporary obstructions therefrom, was to inspect the platforms and the cars just before the latter were started. He testified that when he was foreman he directed some one of his crew, usually the fieldman, to make such an inspection to ascertain whether or not there was any loading or unloading in progress, to see that the car doors were shut, the gang planks out, and everything clear before they started the cars, but that he never instructed him to see whether or not the gate was closed.

On August 13, 1907, two days before this accident, he, then the foreman, and his crew injured a horse by taking the cars out while a shipper was loading them, and the yardmaster rebuked the plaintiff and instructed him to go personally thereafter and see if any stock was being loaded or unloaded before the cars were moved. On the night of the accident the yardmaster told him to help his new foreman as much as he could, and about an hour before the accident his foreman told him to be careful about this inspection. It was the custom for the fieldman to make the inspection, then to shout or sig-

nal to the foreman or some member of the crew to the effect that the train was clear, and for the engineer to start the cars easterly on the spur track upon the receipt of that signal, but not before. There were six or seven cars on the track when the foreman told the plaintiff that they would pull them out, and the plaintiff went to one of the cars near the cattle chute where the accident happened, mounted that car, released a brake, walked along the top of the train, and went down on the north side of one of the cars to the ground at a point west of the westerly cattle chute for the purpose of inspecting the platforms and the cattle chutes to learn whether or not there was any loading or unloading in progress. He testified at one time that the night was so dark that he could not see from the top of the train whether or not loading was proceeding, and at another time that he could have seen whether or not loading was going on, whether or not the car door was open, and whether or not the gate was open by bending down and swinging his lantern over the side of the car. He did not, however, endeavor to pursue the latter course and did not inspect the platforms or the chutes before he descended to the ground. He intended to walk over the platforms and to inspect them with his lantern so that he could be certain that no loading or unloading was proceeding, and after he had done this to give the signal for the engineer to pull the cars off of the spur track. Just as he stepped upon the ground the other members of his crew moved the cars east without waiting for his signal. He pulled himself up on the side ladder of one of the cars. At first he thought that his fellow servants were coupling the engine to the cars, and that they would not take the latter off the spur track; but, as they proceeded, he thought that the foreman must have made the inspection himself; but the thought never occurred to him that the gate might be open, and he rode along the side of the car until he came into collision with it and was knocked off.

The law imposed upon the railroad company the duty to receive and carry stock in its cars at reasonable rates and to furnish to shippers pens, platforms, and cattle chutes, by means of which they could load and unload their cattle with reasonable facility. It imposed upon the shippers the duty to exercise reasonable care to load and unload their stock in such a manner and to so use and leave the means furnished by the company for that purpose that no unnecessary injury would be inflicted upon the company or upon its servants thereby.

A "railroad," including in that term the tracks, platforms, instrumentalities, and equipment furnished by its owners to carry freight and passengers, is a vast machine, and it is at the same time a place for the servants of the company to work. It is the duty of a railroad company to exercise ordinary care to provide and to maintain a reasonably safe machine for this purpose; but the faithful discharge of this duty does not require it to protect its servants against the effects of their own negligence or against the negligence of third parties in the use of this machine and place. On the other hand, it is the duty of the servants to whom the use of such a machine and place is intrusted to exercise ordinary care to so use the machine and place that it may not be rendered dangerous to them, to the company, or to its

customers, by reason of its use. American Bridge Company v. Seeds, 144 Fed. 605, 611, 75 C. C. A. 407, 413, 11 L. R. A. (N. S.) 1041.

A railroad company is not liable to its servants for the negligence of its shippers or customers, because they are not its servants and it has no power to control or direct them in their acts of loading or unloading their property (Brady v. Chicago Great Western Ry. Co., 52 C. C. A. 48, 55, 114 Fed. 100, 107, 57 L. R. A. 712; Standard Oil Co. v. Parkinson, 82 C. C. A. 29, 30, 152 Fed. 681, 682), because their negligence is not the natural and probable consequence of their use of the railroad or of the instrumentalities furnished to them to enable them to use it (Burt v. Advertiser Newspaper Co., 154 Mass. 238, 247, 28 N. E. 1, 13 L. R. A. 97), and because the danger from their negligence is one of the ordinary risks of the operation of the railroad which the servants of the company assume.

A railroad company is not liable to its servants for their own negligence in the use and the operation of the railroad, because such negligence is a breach of their primary duty to the company and to its customers, the risk of which each employé by his acceptance of the service assumes.

The legal presumption is that this railroad company furnished a reasonably safe place for the defendant in error to work and reasonably safe instrumentalities with which the shippers might load and unload their stock. There is evidence which tends to prove that the injury in this case was caused either by the negligence of some shipper who left the gate open when he finished his work of loading or unloading stock, or by the act or negligence of some person unknown, or by the negligence of the fellow servants of the plaintiff who started the cars before he had made his inspection and had given them the signal to move them, or by the negligence of the plaintiff himself, who failed to discharge his specific duty to inspect the platforms and chutes before the cars started, and who rode along on the side ladder of one of the cars when he knew, but failed to think, that if the gate was open it would strike him and knock him from the car. The railroad company is not liable to the plaintiff for any of these breaches of duty. His counsel, however, argues that the company owed his client the duty to furnish a gateman or to make some other provision to close the gate and to keep it closed when stock was not being loaded or unloaded, and that its failure so to do constituted actionable negligence. It is common knowledge, however, that the loading and unloading of cars, the use of gang planks, cattle chutes, heavy wagons, and other instrumentalities for this purpose in or so near to freight cars that the movement of the latter during the process would be dangerous to all concerned and the subsequent removal of these instrumentalities after the work of loading or unloading is completed is usually intrusted to the shippers, and that the duty to see that cars thus loaded or unloaded are clear of these temporary but necessary obstructions before they are moved, is ordinarily imposed upon the servants of the railroad company who take the cars from the loading tracks. The swinging gate provided with a wire hoop to hold it closed away from the cars when shippers were not loading or unloading stock and capable of forming one side of the cattle chute during

the loading or unloading, and the loose boards to extend the permanent fence to the car on the other side of the chute were convenient and facile means of making the necessary temporary lane to guide the cattle from the pen to the car, and the gate was not more dangerous or less necessary than the loose boards and the gang planks.

Railroad companies have, and they must exercise, necessarily, judgment and discretion in determining the methods of the construction, use, and operation of their railroads, and there is a wide field here where their decisions of doubtful questions in the affirmative or negative cannot be and ought not to be held to disclose any want of ordinary care or any breach of duty. It was as reasonable to believe that ordinary care would be exercised to remove such temporary obstructions by shippers who were pecuniarily interested that their stock or property should not be derailed and injured by them, and that reasonable care would be exercised to see that the cars were clear of such obstructions before they were started by the servants of the company who moved them and were in danger of injury if such obstructions remained too near to the cars, as it was to suppose that such care would be exercised by a gateman or any other person specially assigned to that duty alone. It does not appear from the nature of these acts, and there is no substantial evidence, that the method of loading and unloading and of care for the removal of the accompanying temporary obstructions which this railroad company selected was either unreasonable or specially dangerous. Skilled and experienced railroad operators are more competent than jurors or judges to choose methods of operating railroads, and when a railroad company, as in this case, has selected and adopted a customary method of loading and unloading its cars and of removing temporary obstructions necessarily used in that work, which is neither palpably unreasonable nor clearly dangerous, it owes its servants no duty to adopt a different method, and it cannot be held guilty of negligence because it has not done so. Little Rock & M. R. Co. v. Barry, 28 C. C. A. 644, 648, 84 Fed. 944, 948, 43 L. R. A. 349; Gilbert v. Burlington, C. R. & N. Ry. Co., 128 Fed. 529, 531, 63 C. C. A. 27, 29.

There was no substantial evidence of any negligence of the railroad company in this case, and its request for an instructed verdict in its favor should have been granted.

The judgment below must be reversed, accordingly, and the case must be remanded to the court below, with instructions to grant a new trial, and it is so ordered.

VAN DEVANTER, Circuit Judge (concurring). Without assenting to all of the legal propositions set forth in the foregoing opinion, I concur in the judgment of reversal, and this for the reason that the personal testimony of the plaintiff, as also the evidence as a whole, shows conclusively that he contributed to his injury by his own negligence, and therefore is without any right of recovery.

(172 Fed. 353.)

In re DEMPSTER.

DEMPSTER v. WATERS-PIERCE OIL CO. et al.

(Circuit Court of Appeals, Eighth Circuit. July 26, 1909.)

Nos. 92, 2,947.

1. BANKRUPTCY (§ 100*)—ADJUDICATION—COLLATERAL ATTACK.
The validity of an adjudication of bankruptcy cannot be collaterally attacked by a creditor in a court of another jurisdiction.
[Ed. Note.—For other cases, see Bankruptcy, Cent. Dig. § 142; Dec. Dig. § 100.*]

2. BANKRUPTCY (§ 11*)—JURISDICTION OF COURT—SCOPE—PROPERTY IN OTHER DISTRICTS.
Under the bankruptcy law there are no courts of primary and ancillary jurisdiction; but the jurisdiction of the court which makes an adjudication extends to all property of the bankrupt situated anywhere in the United States, and it may make such orders with respect thereto as are necessary for the preservation, collection, and administration of such property.
[Ed. Note.—For other cases, see Bankruptcy, Cent. Dig. § 11; Dec. Dig. § 11.*
Jurisdiction of federal courts in suits relating to bankruptcy, see note to Bailey v. Mosher, 11 C. C. A. 313.]

3. BANKRUPTCY (§§ 104, 114*)—JURISDICTION OF COURT—ANCILLARY PROCEEDINGS.
A court of bankruptcy is without jurisdiction, on a petition or motion filed by a receiver in bankruptcy appointed in another district, to appoint an ancillary receiver or to grant an injunction to restrain a sale of property of the bankrupt within its district; its power to entertain such a petition or motion, or to grant such relief, being limited to causes or proceedings regularly pending before it.
[Ed. Note.—For other cases, see Bankruptcy, Cent. Dig. §§ 156, 165; Dec. Dig. §§ 104, 114.*]

4. BANKRUPTCY (§ 115*)—RECEIVERS—AUTHORITY TO MAINTAIN PLENARY SUIT.
A receiver in bankruptcy, appointed under Bankr. Act July 1, 1898, c. 541, § 2 (3), 30 Stat. 545 (U. S. Comp. St. 1901, p. 3421), is charged with the duty of preserving the property of the bankrupt, and to that end, where property is situated at a distance from the court of his appointment and is in danger of being dissipated through sales by judgment creditors, which would cause irreparable damage to the estate before he can apply to that court, he may maintain any plenary suit or action necessary for its protection in the district where the property is situated.
[Ed. Note.—For other cases, see Bankruptcy, Cent. Dig. § 165; Dec. Dig. § 115.*]

Appeal from the District Court of the United States for the Southeastern Division of the Eastern District of Missouri, in Bankruptcy.

On April 10, 1908, a petition in involuntary bankruptcy was filed in the District Court for the Southern District of New York, against the Hudson Valley Lead Company, a corporation organized under the laws of that state, asking that it be adjudged bankrupt upon its confession in writing that it was insolvent and unable to pay its debts. The following day the court appointed Harry Arnold receiver of the property of the corporation and authorized him to conduct its business. The principal estate of the bankrupt was a lead mine and machinery and other property used in working the same, situated in Southern Missouri. A few days prior to the filing of the petition in bankruptcy,

namely, March 25, 1908, the appellant, Dempster, recovered a judgment against the bankrupt in the circuit court of Madison county, Mo., for $11,380.23, upon which execution was issued and levied upon a large amount of the company's real and personal property. The sale was advertised to take place April 17th, and if carried out would have completely disrupted the business of the corporation and greatly impaired the value of the estate. On April 16th the creditors (among others the Waters-Pierce Oil Company) who filed the petition in bankruptcy in New York and the receiver presented a "petition" in the United States District Court for the Eastern District of Missouri, setting forth the proceedings in the New York court, the seizure of the property under the execution, and the imminence of the sale. It further stated that the sale would result in a preference to Dempster, and waste and destroy the estate of the bankrupt. This petition was not a bill in equity, and prayed for no subpœna or answer. It pertained to no suit or proceeding pending in the court where it was filed, but was in effect a motion made in no cause before the court. It prayed (1) for the appointment of an "ancillary" receiver to take possession of the estate in Missouri; and (2) for an injunction restraining Dempster and the sheriff from selling the property on the execution. No notice was served upon Dempster or the sheriff, but the bankrupt appeared by counsel and consented that the relief asked for be granted. On the same day, April 16th, an ex parte order was made in accordance with the prayer of the petition. The sheriff, upon this order being presented to him, turned the property over to the receiver.

June 19th Dempster applied to the trial court to vacate its order, because made without jurisdiction, and for a return of the property to the sheriff. Before this date the corporation had been adjudicated a bankrupt in the original proceeding in New York and a trustee had been duly elected and qualified. He appeared and answered the petition, not only setting up the adjudication and his own election, but further stating that Dempster had appeared repeatedly in the federal court of New York, and among other things had petitioned that court to transfer the proceeding to the United States Court for the Eastern District of Missouri. The matter came on to be heard on petition and answer, and evidence adduced by the parties. The court entered an order that the receiver appointed in the District Court in Missouri turn over to the trustee in bankruptcy appointed in the proceeding in New York "all the property of the bankrupt taken possession of by the receiver, but without prejudice to the rights of Dempster to claim and enforce in any court of competent jurisdiction any right or lien to which he may be entitled by reason of the judgment heretofore rendered in the circuit court of Madison county, Mo." It was further ordered that the injunction against Dempster and the sheriff, restraining them from interfering with the possession of the ancillary receiver, be continued as to the possession of the trustee. A review of this order is sought both by appeal and petition.

H. J. Cantwell and John C. Brown, for appellant.

E. D. Anthony, for appellees.

Before VAN DEVANTER, Circuit Judge, and RINER and AMIDON, District Judges.

AMIDON, District Judge (after stating the facts as above). The appellant mainly contends that the written admission of the corporation that it was insolvent and unable to pay its debts was collusive, and that the adjudication in bankruptcy in New York was without authority of law. This is a collateral attack upon the judgment of the New York court, which cannot be permitted. When the petition in bankruptcy in that court was filed, it was a caveat to all the world, and the appellant here was thereby made a party to that proceeding. If in his judgment is was without authority of law, or the petition was collusive, it was his duty to appear in that court and contest the proceeding, and, if dissatisfied with the judgment, seek his redress by

appeal. He cannot be heard to raise the question collaterally in another court.

We are of the opinion, however, that the entire proceeding in the trial court was coram non judice. It was definitely decided in this circuit in the case of In re Granite City Bank, 137 Fed. 818, 70 C. C. A. 316, that under the present bankruptcy law "there are no such things in bankruptcy proceedings as courts of primary and ancillary jurisdiction." The court in which the petition is filed has plenary jurisdiction in bankruptcy throughout the United States. Within that limit all the estate in the possession of the bankrupt or held by another as his property is brought immediately within the custody of the court and made subject to its protection. The filing of the petition is an attachment of the estate, and an injunction restraining any act which will interfere with its administration in bankruptcy. This jurisdiction is national, and takes no account of districts or states. In re Wood and Henderson, 210 U. S. 246, 28 Sup. Ct. 621, 52 L. Ed. 1046; In re Williams (D. C.) 123 Fed. 321, approved by the Circuit Court of Appeals of the Second Circuit, in the case of In re Von Hartz, 142 Fed. 726, 74 C. C. A. 58. See, also, In re Williams (D. C.) 120 Fed. 38; In re Schrom (D. C.) 97 Fed. 760. Any proceeding necessary for the protection of the estate had in any other district must take the form of a plenary action at law or suit in equity. A petition or motion, such as was presented to the trial court, can only be made in an action, suit, or proceeding pending in court. The appointment of a receiver or the issuance of an injunction can only be made in some cause properly before the court. Inasmuch as there was no cause or bankruptcy proceeding pending in the Eastern District of Missouri to which the petition or motion here under review could be attached as a provisional remedy, the trial court was wholly without jurisdiction to entertain the motion.

A contrary conclusion is reached in the cases of In re Benedict (D. C.) 140 Fed. 55, and In re Dunseath & Son Co. (D. C.) 168 Fed. 973, where the authorities are reviewed. The decisions there relied on, however, are misapprehended. Sherman v. Bingham, Fed. Cas. No. 12,762, and Lathrop v. Drake, 91 U. S. 516, 23 L. Ed. 414, were both plenary suits. The former was an action of assumpsit, instituted by declaration and summons, to recover money wrongfully received from the bankrupt. The latter was a suit in equity, instituted by bill and subpœna, to set aside a fraudulent preference. The question raised in these cases was whether under Bankr. Act March 2, 1867 (14 Stat. 517, c. 176), United States courts had jurisdiction of a plenary action brought by the trustee in any district other than that in which the petition was filed, and it was decided that such jurisdiction existed. Such suits are spoken of by the court as ancillary; but the word "ancillary," as there used, simply means that the suits are in aid of the court of bankruptcy in collecting the assets of the estate. They lend no countenance to the filing of a petition or motion in a court where no cause is pending.

Under the present bankruptcy law the trustee is vested with all the property belonging to the bankrupt, and may pursue any remedy

available to the owner of property. If the property has been reduced to possession, the court of bankruptcy can grant him full relief in the exercise of its summary jurisdiction. If it is held adversely, he can only recover it by plenary action or suit. The only court in which he can proceed by petition or motion is the court in which the proceeding is originally instituted. In re Williams (D. C.) 123 Fed. 321; Ross-Mecham Foundry Co. et al. v. Southern Car & Foundry Co. (D. C.) 124 Fed. 403; In re Von Hartz, 142 Fed. 726, 74 C. C. A. 58. The only cases to the contrary, besides those mentioned in the preceding paragraph, are In re Peiser (D. C.) 115 Fed. 199, in which the subject is not in any way discussed, and In re Sutter Bros. (D. C.) 131 Fed. 654, which must be regarded as overruled by the case of In re Von Hartz, 142 Fed. 726, 74 C. C. A. 58.

It does not follow, from what we have said, that the parties in interest here were without remedy. The authority of the bankruptcy court to appoint a receiver for the preservation of the estate pending the adjudication, to authorize the receiver temporarily to conduct the business of the alleged bankrupt, and to make all orders necessary for the accomplishment of those objects, applies to the entire estate of the bankrupt, wheresoever it may be situated in the United States, and is not confined to such property as may be within the district wherein the petition in bankruptcy is filed. In short, the authority to take precautions for the preservation of the estate pending the adjudication in bankruptcy is quite as broad, territorially speaking, as is the authority to collect, administer, and settle the estate after a trustee is appointed. Section 2, cl. 3, of the bankruptcy act (Act July 1, 1898, c. 541, 30 Stat. 545 [U. S. Comp. St. 1901, p. 3421]), authorizes the court to appoint receivers "for the preservation of estates, to take charge of the property of bankrupts." Wherever the estate is in the United States, there this jurisdiction extends. In its exercise the court may authorize the receiver to take possession of property belonging to the estate wherever situated, and restrain third parties from interfering with that possession, and may also restrain them from pursuing remedies in other courts which will conflict with the duties of the receiver. In the recent case of In re Muncie Pulp Co., 151 Fed. 732, 81 C. C. A. 116, the Circuit Court of Appeals of the Second Circuit held that a court of bankruptcy in the Southern District of New York had power to authorize its receiver to take possession of real property belonging to the estate in Arkansas, and to restrain creditors residing in that state from prosecuting actions in its courts by attachment against the property. Upon the authority of that case, the court of New York in the instant case had jurisdiction to restrain the execution sale now under consideration by specific order. If the pendency of that sale was not discovered by the receiver until he reached the state of Missouri, and at a time when it would have been too late to apply to the court of his appointment, there were still several courses open to him: (1) He might have applied to the state court out of which the execution issued to restrain further proceedings thereon, and it would have been the imperative duty of that court, under section 11 of the bankruptcy act, to grant the relief. (2) The sheriff held the property as the property of the bankrupt.

Otherwise there would have been no foundation for his levy. Clarke v. Larremore, 188 U. S. 486, 23 Sup. Ct. 363, 47 L. Ed. 555. In this case the Supreme Court decided that money arising from an execution sale of the property of the bankrupt, while in possession of the officer making the sale, could be arrested and reclaimed by the trustee. Much more could property which is simply held under a levy be recovered on behalf of the estate. Holding the property as the property of the bankrupt, it would have been the duty of the sheriff, upon demand of the receiver, to acknowledge his right and suspend further proceedings under the writ. Any priorities which the creditor secured by the levy would have been fully protected in the court of bankruptcy. (3) If the state authorities had refused to accede to the requests of the receiver, he could have filed a plenary suit to enforce his right to the possession of the property and to restrain its dissipation and waste by the execution sale. It would seem that the United States Circuit Court would have jurisdiction of such a cause as a suit arising under the laws of the United States, within the meaning of the judiciary act. The limitations of section 23 of the bankruptcy law relate only to suits brought by trustees, and do not apply to suits by receivers.

It has been held that a receiver in bankruptcy has no power to maintain suits for the recovery of property in the possession of third parties under a claim of right. Boonville National Bank v. Blakey, 107 Fed. 891, 47 C. C. A. 43; In re Kolin, 134 Fed. 557, 67 C. C. A. 481; Guaranty Title & Trust Co. v. Pearlman (D. C.) 144 Fed. 550. It would be easy to press the doctrine of these cases too far. It is true, as they hold, that the collection of the estate belongs to the trustee; but its preservation pending the election of a trustee is the duty of the receiver, and in many cases the property of the bankrupt can only be saved from dissipation by the receiver's taking it into his immediate actual possession. His powers in preserving the estate are larger than those of a trustee. When necessary for its preservation, the court may direct him to take possession of property, although the same is held adversely under a claim of right—property so situated that the trustee could only recover it by a plenary action. This is the express holding of the Supreme Court in Bryan v. Bernheimer, 181 U. S. 188, 21 Sup. Ct. 557, 45 L. Ed. 814. It is true that in that case the party having adverse possession intervened in the bankruptcy court by petition for the protection of his right. But the Supreme Court declares broadly the power of the receiver or marshal to take possession of property though held adversely. It quotes from the case of Sharpe v. Doyle, 102 U. S. 686, 26 L. Ed. 277, where the court sustained the exercise of such a power under the act of 1867 by an officer proceeding in invitum, and holds that the doctrine declared in that case is equally applicable to receivers and marshals acting under the present bankruptcy law. See, also, Feibelman v. Packard, 109 U. S. 421, 3 Sup. Ct. 289, 27 L. Ed. 984; In re Rochford, 124 Fed. 182, 59 C. C. A. 388. As the Supreme Court points out in Sharpe v. Doyle, this power is indispensable to the preservation of estates. If it did not exist, it would be possible for dishonest bank-

rupts and those acting in collusion with them to completely dissipate the estate. Horner-Gaylord Co. v. Miller (D. C.) 147 Fed. 295.

Peculiar circumstances might also exist, owing to the great distances in this country and the wide distribution of estates, in which it would be impossible for the receiver to apply to the court of his appointment to enforce the delivery of possession of property belonging to the estate against persons refusing to acknowledge his rights, and when the property would be dissipated and the estate suffer irreparable loss unless prompt relief could be obtained. In such a case the receiver could, in our judgment, maintain any action or suit necessary for the protection of the estate. The authorities which hold that a receiver in bankruptcy has no power to seize property or maintain suits for the protection of the estate outside the district of his appointment confuse such a statutory receiver with the ordinary receiver in chancery. A receiver of the latter class derives all his powers from the order appointing him, and is confined to the jurisdiction of the court from which it emanates. A receiver in bankruptcy, on the contrary, not only derives his powers from the statute, but the jurisdiction of the court appointing him, as already explained, is, as to such receiverships, coextensive with the United States. This distinction is clearly recognized in Booth v. Clark, 17 How. 322, 334, 15 L. Ed. 164; Hale v. Allinson, 188 U. S. 56, 68, 23 Sup. Ct. 244, 47 L. Ed. 380. While such a receiver acts at all times under the supervision of the court, his authority to maintain suits for the protection of the estate need not be expressly granted. It would spring by implication from the nature of his duties.

The question brought to this court in the present case is a naked question of law arising upon uncontroverted facts, and can well be dealt with under the petition to revise. The appeal is therefore dismissed.

It follows, from what we have said, that in no possible view of the matter was the court below possessed of jurisdiction to entertain this proceeding. Its order or decree must therefore be reversed, with a direction to dismiss the petition or motion without prejudice to the rights of any of the parties concerned; and it is so ordered.

(172 Fed. 358.)

KNICKERBOCKER STEAMBOAT CO. v. CUSACK.

(Circuit Court of Appeals, Second Circuit. January 30, 1905.)

No. 100.

1. FALSE IMPRISONMENT (§ 7*)—CIVIL LIABILITY—DEFENSES.

In an action solely for false imprisonment, the termination of the criminal proceedings is immaterial, and it is not a defense that the plaintiff pleaded guilty to the charge made against him.

[Ed. Note.—For other cases, see False Imprisonment, Cent. Dig. §§ 5–61, 79; Dec. Dig. § 7.*]

2. ARREST (§ 63*) — ON CRIMINAL CHARGE — AUTHORITY TO ARREST WITHOUT WARRANT.

Under Code Civ. Proc. N. Y. § 177, which allows an arrest by an officer without a warrant only for a crime committed or attempted in his pres-

ence, or when the person arrested has committed a felony, although not in his presence, or when a felony has in fact been committed and he has reasonable cause for believing the person arrested to have committed it, the arrest without a warrant of a person charged only with a misdemeanor not committed in the officer's presence is illegal.

[Ed. Note.—For other cases, see Arrest, Cent. Dig. §§ 144–156; Dec. Dig. § 63.*]

3. False Imprisonment (§ 8*)—Civil Liability—Measure of Damages.

Under the general rule of damages in cases of false imprisonment that the person causing a wrongful imprisonment is liable for all the natural and probable consequences thereof, where the mate of defendant's vessel pointed out the plaintiff, who was a passenger, to an officer, and demanded his arrest, and after the officer had illegally arrested him without a warrant and taken him before a magistrate the mate filed a complaint against him falsely charging him with a criminal offense, plaintiff's imprisonment on such charge may properly be regarded as a continuation of the original wrong, for which defendant was liable in damages.

[Ed. Note.—For other cases, see False Imprisonment, Cent. Dig. §§ 68–73; Dec. Dig. § 8.*]

In Error to the Circuit Court of the United States for the Southern District of New York.

The defendant in the court below brings this writ of error to review a judgment for the plaintiff entered upon the verdict of a jury in the United States Circuit Court for the Southern District of New York.

Benjamin Trapnell, for plaintiff in error.

Henry H. Bowman, for defendant in error.

Before LACOMBE, TOWNSEND, and COXE, Circuit Judges.

TOWNSEND, Circuit Judge. The plaintiff was a passenger on board the excursion steamer General Slocum, belonging to the defendant, on an excursion trip from Paterson, N. J., to Rockaway Beach and return. There was some fighting on the boat, in the course of which plaintiff was assaulted. The mate of the Slocum separated the parties, put the plaintiff's assailant and some other persons in the hold, and, when the steamboat arrived at Rockaway Beach, pointed plaintiff out and directed a police officer to arrest him. The officer took plaintiff to the magistrate's court at Far Rockaway, where the mate made a complaint against him. The plaintiff at first pleaded not guilty, but afterwards changed his plea to guilty, and was fined $5. He did not have the money to pay the fine, and he was chained with some criminals and put into a van and driven to Long Island City, where he was put in jail and kept in confinement until the next morning, when he was discharged. He sued for this false imprisoment, and obtained a verdict for $800 damages.

The claim of counsel for defendant that the plea of guilty in the magistrate's court was a bar to this action is not well founded. The authorities are practically unanimous to the effect that, in an action solely for false imprisonment, the termination of the criminal proceedings is immaterial. Newell on Malicious Prosecution, 307; Burns v. Erben, 40 N. Y. 463; Hopner v. McGowan, 116 N. Y. 405–410,

22 N. E. 558; Barry v. Railroad Co., 51 App. Div. 385, 64 N. Y. Supp. 615. The New York Code of Civil Procedure allows the arrest by an officer without a warrant only for a crime committed or attempted to be committed in his presence, or when the person arrested has committed a felony, although not in his presence, or when a felony has, in fact, been committed, and he has reasonable cause for believing the person arrested to have committed it. Code Civ. Proc. § 177. Here the plaintiff was guilty only of a misdemeanor, and the arrest was illegal. Thorn v. Turck, 94 N. Y. 90, 46 Am. Rep. 126; Barry v. Railroad Co., supra; People v. Pratt, 22 Hun, 300; Loomis v. Render, 41 Hun, 268. The exception to the refusal of the court to charge the twenty-ninth request to charge raises the question of the measure of damages. This request was as follows:

"(29) That, if the arrest was unlawful, it was only so from the time the plaintiff was arrested until he reached the magistrate's court, which was by the undisputed evidence of the police officer less than one hour, and that damages can only be given against the defendant for the arrest on the boat and the holding of him until he came into the magistrate's jurisdiction."

In respect to this proposition the court charged the jury, inter alia, as follows:

"If you should come to the conclusion that the mate was not warranted in pointing the plaintiff out to the officer for the purpose of having him arrested, then naturally there follows from that the question what he should receive for this indignity, and it would be an indignity if you find the former conclusions to prevail, what damages you shall give him for such acts, and it seems to me very clear that the proceedings which followed from the time Officer Thompson laid his hand on him until he was back at his home flow naturally from the action of the mate in pointing him out to Officer Thompson."

The general rule of damages in cases of false imprisonment is that the person causing a wrongful imprisonment is liable for all the natural and probable consequences thereof. 12 Am. & Eng. Encyc. of Law (2d Ed.) 778, and cases cited. The plaintiff is entitled to recover damages for what the party wrongfully did. Buzzell v. Emerton, 161 Mass. 176, 36 N. E. 796. The independent illegal acts of the officers of the law are not the natural and probable consequences of such false arrest.

Thus, in Gulf, C. & S. F. Ry. Co. v. Johnson, 54 Fed. 474, 4 C. C. A. 447, where plaintiff sued the railway company for forcible removal from a train by a constable acting on complaint of defendant, the court held the company not liable for the acts of the officer after plaintiff's removal in putting plaintiff in irons, formally arresting him on warrant, and detaining him until released on bail. And in Frankfurter v. Bryan, 12 Ill. App. 549, it is held that, where the arrest is caused on one charge and a fine was imposed on another charge, the complainant was not liable for the false arrest. In McCall v. McDowell, Fed. Cas. No. 8,673, defendant was held liable for imprisonment and indignities suffered by plaintiff solely on the ground that they were the probable consequences of such confinement in a military prison, if not provided against by him.

But, as to the question whether the action of the magistrate or other officer of the law after the surrender of the person imprisoned is the

natural and probable consequence of the original unlawful act, the authorities are in conflict. In Shea v. Manhattan Railway Co. (Com. Pl.) 8 N. Y. Supp. 332, where defendant's employé caused the arrest of the plaintiff by a police officer and accompanied the officer to the police station and signed a complaint before the magistrate, and the plaintiff was discharged, the court held that all the proceedings taken together constituted one continuous act of imprisonment, and that the arraignment of the plaintiff before the police justice was an inevitable concomitant and sequence of his arrest. The court there cited with approval the following language of the court in Rown v. Christopher & Tenth Street Railroad Co., 34 Hun, 471:

"What was done was a continuous act, beginning with the attempt of the driver to remove the passenger and terminating only with his discharge the next morning by the court before which he was taken. * * * To present the case clearly to the jury, the evidence of what occurred after the plaintiff was taken from the car and up to and including the time of his discharge was proper for their consideration. It simply exhibited the development of the events naturally following and arising out of the unlawful act of the driver in endeavoring to remove plaintiff from the car."

In the latter case the action appears to have been for damages for unlawul removal from a car, for assault, and for unlawful imprisonment for resisting the effort at removal. The court held that the defendant was liable for all the consequences of all of said acts.

In Murphy v. Countiss, 1 Harr. (Del.) 143, in an action for trespass, assault, and battery and false imprisonment, the court held that the plaintiff could recover, not merely for the time the constable was bringing him to jail, but for the whole period of his imprisonment. And in Mandeville v. Guernsey, 51 Barb. (N. Y.) 99, the court says:

"The arrest being wrongful, the defendant is liable for all the injurious consequences to the plaintiff which resulted directly from the wrongful act. * * * A person who has arrested a party without process, or on void process, wrongfully, cannot detain him on valid process, until he has restored such party to the condition he was in at time of his arrest, at least to his liberty. The law will not permit him to perpetrate a wrong for the purpose of executing process, nor to use process for the purpose of continuing an imprisonment, commenced without authority, and by his wrongful act."

See, also, In re Allen, 13 Blatch. 271, Fed. Cas. No. 208, and cases cited; Powell v. Hodgetts, 2 Carrington & Payne, 432.

On the other hand, in Locke v. Ashton, 18 L. J. Q. B. 76, the plaintiff was a carman in defendant's employ, and had been sent to bring 20 sacks of oats from the premises of certain grain merchants to those of the defendant. Plaintiff brought back with him only 19 sacks, whereupon the defendant gave him into custody on the charge of stealing the missing sack. The magistrate, before whom the complaint was preferred, remanded the plaintiff, but subsequently discharged him, upon its appearing that the missing sack was left with the city toll collector as security for tolls. The judge instructed the jury that the plaintiff was entitled to damages for the whole time that he was kept in custody. The case was heard on appeal before Chief Justice Denman and Judges Coleridge, Wightman and Earl. It was there argued that defendant was liable for all the consequences of his wrongful act within

the doctrine of Scott v. Shepard, 2 W. B. 892. The court held as follows:

"The remand, in respect of which the jury gave damages, was the act of the magistrate, not the act of the defendant; and therefore ought not to have been taken into consideration by the jury in assessing the damages."

In Langford v. Boston & Albany Railroad Company, 144 Mass. 431, 11 N. E. 697, where the agent of the defendant made a complaint to a trial justice against the plaintiff for unlawfully refusing to pay his fare, and the magistrate issued his return in due form for plaintiff's arrest, it was held that defendant was not liable in trespass for the acts done by the officer in serving the return, even though the magistrate had no jurisdiction to issue the return. Barker v. Stetson, 7 Gray (Mass.) 53, 66 Am. Dec. 457, is to the same effect.

In Teal v. Fissell (C. C.) 28 Fed. 351, the court in holding that the party making the complaint was not liable for the act of the justice said as follows:

"To hold the prosecutor responsible in such a case who simply discharges a public duty in making information of a supposed offense would not only be grossly unjust to him, but would also be highly injurious to the public interests. * * * He has nothing to do with issuing the writ; no authority or influence respecting it. It is the justice's duty to pass upon the facts, and determine whether a warrant shall issue. His functions are judicial. * * * Here the prosecutors honestly believed an offense had been committed, and that the information laid before him (the justice) was truthful. They were, therefore, in no respect responsible for what followed."

In Barker v. Stetson, supra, the court says:

"The authorities are conclusive that, when a person does no more than to prefer a complaint to a magistrate, he is not liable in trespass for the acts done under the warrant which the magistrate thereupon issues, even though the magistrate has no jurisdiction."

In Brown v. Chapman, 60 Eng. Common Law, 364, the plaintiff sued in trespass for assault and false imprisonment. There the defendant preferred a charge of embezzlement to the magistrate, and the plaintiff was taken into custody. The court held that the acts of the defendant in making the charge, and even in stating in the presence of the magistrate that he, the defendant, gave the plaintiff into custody, amounted to nothing more than calling upon the magistrate to exercise his jurisdiction. The court there in affirming the nonsuit ordered in the court below discussed the cases bearing on this question, and concluded that a person making a complaint or applying to a magistrate for a return for the arrest of the accused only appeals to the magistrate to exercise his jurisdiction, and that the complainant is exempt from liability in trespass.

In Newman v. New York, Lake Erie & Western Railroad Co., 54 Hun, 335, 7 N. Y. Supp. 560, the plaintiff was arrested by the servant of the defendant as a suspicious person, and was afterwards discharged on the ground that the arrest was made without legal authority. There was a conflict in the testimony as to whether the plaintiff's detention in the police station was or was not at the instance of defendant's officer. The court was therefore asked to direct the jury that, if they should be of the opinion that defendant's officer arrested

the plaintiff, it was not liable for what subsequently occurred by reason of the action of the police officer or of the justice in detaining the plaintiff, unless they believed it was at the request of defendant's officer. The court declined to make this charge, and held that the defendant was entitled to the instruction requested. In its opinion the court said as follows:

"From the time when the plaintiff was taken before the sergeant he was subject to his control and direction, and if he, in the discharge of his duty and the exercise of his authority, considered the case to be one requiring the further detention and examination of the plaintiff, it was his act and not that of the defendant. If, on the contrary, the detention was produced by the instigation or urgency of an officer in the employment of defendant, having authority on its behalf to make the arrest, then the defendant would be liable for the damage sustained by this continued detention of the plaintiff, and the case should have been in that manner submitted to the jury, instead of the subject being withdrawn, as it was, from their consideration by this refusal to charge."

This court is not agreed as to the general rule of liability for damages applicable in such cases where the evidence fails to show any action on the part of a defendant other than such as is necessary to place the person arrested under the control of the magistrate. In the case at bar, however, it appears that the mate pointed the plaintiff out and told the officer to arrest him, saying, "Catch that fellow, take him"; that he charged him with being one of the men who had caused the disturbance; that he made the complaint before the magistrate on which plaintiff was committed, and in said complaint charged plaintiff with using threatening, abusive, and insulting behavior with intent to provoke breach of the peace. The evidence shows that these accusations were not justified by the facts, and that plaintiff merely defended himself against an unprovoked assault. The mate admitted that the first thing he saw was that somebody struck plaintiff in the face, and that he told plaintiff that he, plaintiff, had been abused, and that a great wrong had been done him.

In these circumstances we think the conduct of the mate after the arrest may be justly regarded as a continuation of the original wrong for which defendant was liable, and that the subsequent proceedings were the direct result of the unjustified and pernicious activity and urgency of the mate, and only indirectly and remotely attributable to the action of the committing magistrate. We think, furthermore, that in either view of the case the plaintiff was entitled to a verdict, and we are not prepared to say that the damages imposed would have been excessive if they had been assessed for the indignity and suffering endured prior to the proceedings before the magistrate.

The judgment is affirmed, with costs.

(172 Fed. 364.)

LEHIGH VALLEY R. CO. v. PROVIDENCE WASHINGTON INS. CO.

(Circuit Court of Appeals, Second Circuit. May 19, 1909.)

No. 262.

1. INSURANCE (§ 622*)—CONSTRUCTION OF CONTRACT—LIMITATION OF ACTION.
An open policy of marine insurance issued to a carrier on its cargoes, insuring them "for account of whom it may concern," contained a provision that no actions should be maintained thereon "unless commenced within the time of 12 months next after the disaster causing such loss or damage shall occur." *Held*, that such policy was not one of liability insurance, but that the sinking of a vessel, causing damage to its cargo, was the "disaster" causing the loss, and that the insured had immediately a right of action for the benefit of any party in interest, independently of any antecedent recovery against it by the cargo owner, and that an action was barred in 12 months thereafter.

[Ed. Note.—For other cases, see Insurance, Dec. Dig. § 622.*

Conditions in policy as to time for bringing suit, see notes to Steel v. Phœnix Ins. Co., 2 C. C. A. 473; Rogers v. Home Ins. Co., 35 C. C. A. 404.]

2. WORDS AND PHRASES—"WAIVER."
A "waiver" is the intentional relinquishment of a known right.

[Ed. Note.—For other definitions, see Words and Phrases, vol. 8, pp. 7375–7381, 7831–7832.]

Appeal from the District Court of the United States for the Southern District of New York.

For opinion below, see 167 Fed. 223.

In the policy sued upon the respondent insured the libelant, "for account of whom it may concern, on all kinds of grain and flaxseed, against any and all risks and perils of fire, inland navigation and transportation, the property of the assured or held in trust or custody, or as freighter, forwarder, bailee or common carrier, while on board barge or barges, lighter or lighters, boat or boats, float or floats." On January 23, 1903, while the policy was in force, 4,500 bushels of wheat covered by it and in the course of transportation by the libelant as common carrier were damaged by the sinking of a canal boat upon which they were loaded. The owners of the wheat assigned their claim for its loss to one Bradley, who in March, 1906, obtained a decree against the libelant in the District Court. In April, 1907, this decree was affirmed on appeal by this court. The libelant paid the amount of the decree and within 12 months thereafter brought this action to recover the amount so paid together with expenses.

The District Court held that the respondent was not liable because: (1) The action was not commenced within the time limited by the following provision of the policy: "It is further hereby expressly provided that no suit or action against said company for the recovery of any claim upon, under, or by virtue of this policy shall be sustainable in any court of law or chancery, unless such suit or action shall be commenced within the time of 12 months next after the disaster causing such loss or damage shall occur; and in case any such suit or action shall be commenced against said company after the expiration of 12 months next after the disaster causing such loss or damage shall have occurred, the lapse of time shall be taken and claimed as conclusive evidence against the validity of the claim thereby attempted to be enforced." (2) The policy provided that it should not apply, should there be any existing insurance by the owner of the goods, and there was such insurance.

Robinson, Biddle & Benedict (U. S. Montgomery, of counsel), for appellant.

James J. Macklin (De Lagnel Berier, of counsel), for appellee.

Before LACOMBE, COXE, and NOYES, Circuit Judges.

NOYES, Circuit Judge (after stating the facts as above). The question of primary importance in this case is whether the action was commenced within the 12-months limitation period of the policy. If the limitation is a bar, there is no necessity for considering the other questions presented. The disaster which caused the damage to the grain occurred in 1903. If this were the "disaster" of the limitation clause, this action—begun in 1907—was commenced too late. If, on the other hand, the decree which held the libelant liable was, with respect to it, the "disaster," the action was commenced in time. In other words, the question is whether the policy can be treated as one of liability insurance.

As already shown, the libelant was insured "for account of whom it may concern," and the policy covered the grain while in the custody of the libelant as a common carrier or bailee. We think that upon the occurrence of the damage by the sinking of the vessel the libelant had immediately a cause of action upon the policy. As bailee and carrier it had a special property in the wheat. Moreover, its right to recover upon the policy was not merely for its own benefit, but for the benefit of the other interested parties. It is true that after payment to the general owner recovery upon the policy would have afforded reimbursement as in the case of liability insurance. But that did not make it a liability insurance policy. As already stated, the libelant had the right to recover independently of any antecedent recovery against it and to hold the amount recovered either for its own benefit by way of reimbursement or for the benefit of other parties in interest. It follows, therefore, that as the libelant could have brought suit immediately after the accident, the limitation clause operated as a bar to this action, which was commenced several years afterwards.

The next question is whether the respondents waived the defense of the limitation clause. A waiver is the intentional relinquishment of a known right. We see nothing in the record showing that the respondent or its agent intended to waive this defense. The testimony concerning a promise to bear a part of the expenses of the litigation is entirely insufficient to establish such a waiver. The fact that the respondent insisted upon other defenses did not amount to a waiver of this defense. Moreover, we find nothing operating against the respondent by way of estoppel.

The decree of the District Court is affirmed, with costs.

(172 Fed. 366.)

EL CAMBIO GOLD MINING CO. v. CUCHARAS MINING CO. et al.

(Circuit Court of Appeals, Ninth Circuit. August 2, 1909.)

No. 1,669.

SHIPPING (§ 27*)—SALE OF VESSEL—ACTION FOR PRICE—FAILURE TO DELIVER.

A purchaser of a half interest in a steamer, which contracted to pay therefor one-half her cost, to be shown by an itemized bill to be furnished by the seller, and on the transfer of such half by a good and sufficient bill of sale free from liens, *held* not bound for the purchase price, where no bill of the cost nor bill of sale was tendered prior to the time when the vessel was lost.

[Ed. Note.—For other cases, see Shipping, Dec. Dig. § 27.*]

In Error to the Circuit Court of the United States for the Southern Division of the Southern District of California.

J. B. McLaughlin and John L. Fleming, for plaintiff in error.

J. H. Shankland and J. P. Chandler, for defendants in error.

Before GILBERT and ROSS, Circuit Judges, and HUNT, District Judge.

ROSS, Circuit Judge. The plaintiff in error, a corporation organized and existing under the laws of South Dakota, brought this action in the court below to recover of the defendants in error money alleged to be due upon contract. The cause was tried before the court without a jury upon stipulation of the parties, and resulted in a judgment of nonsuit. The contract was in writing, bore date October 17, 1904, and provided for the sale by the Cambio Gold Mining Company to the Cucharas Mining Company of a half interest in a certain steamship, called "Arrow," her tackle, apparel, etc., after the vessel should be taken by the vendor to the port of Mazatlan, Mexico, and there placed under the Mexican flag, and, upon the consummation of such sale, further providing for the future operation of the ship by the vendor and vendee through a corporation to be organized by them under the laws of the territory of Arizona, upon certain terms and conditions specified in the contract, but which need not be detailed. The contract expressly declared the plaintiff in error to be the owner of the ship, and contained an express warranty on its part:

"That said vessel, with her tackle, apparel, furniture, boats, and other appurtenances, is now, and shall continue to be, until the transfer at Mazatlan, republic of Mexico, of a half interest to the vendee according to the terms and stipulations of this instrument, wholly and exclusively the property of the vendor, and free of liens, incumbrances, and claims of any and every description."

It also contained these express covenants on the part of the vendor: To properly equip the vessel and cause her to be navigated as expeditiously as possible to the port of Mazatlan, and there to place her under the Mexican flag, with all the proper and legal forms; that immediately upon the vessel reaching Mazatlan in good order, and her being there placed under the Mexican flag, the vendor should deliver to the vendee an itemized bill, accompanied by proper vouchers

in writing, when vouchers could be obtained, which statement should include the original cost of the vessel, her tackle, apparel, furniture, boats, appurtenances, etc., the expenses for fuel and navigation to Mazatlan from Port Townsend, Wash., where she then was, the expense of placing the vessel under the Mexican flag, and any and every other necessary expense incurred in the premises, and thereupon the vendor should tender and deliver to the vendee a proper bill of sale or other instrument sufficient to pass the title to a half interest in the vessel and her equipment to the vendee upon the concurrent payment on its part to the vendor, in lawful money of the United States, of one-half of the proper total of the aforesaid itemized statement; the Cucharas Mining Company expressly covenanting:

"To purchase, at the time and place and in the manner aforesaid, the half interest aforesaid, and well and truly to pay the purchase price, to be made certain in the manner aforesaid."

The agreement contained the further provision that any sum of money advanced by the vendee for the benefit or on account of the vessel, at the request of "the president, manager, master, or superintendent," between the time of the execution of the contract "and the time of transfer as aforesaid, shall be and remain a lien, without interest, chargeable against said vessel, and to be credited upon the purchase price as aforesaid when ascertained." The agreement also contained provisions for the organization by the vendor and vendee of a corporation under the laws of Arizona, the capital stock of which should be owned equally by the vendor and vendee, for the future operation of the ship for the benefit of the parties interested.

The evidence introduced upon the trial showed that when the vendor got the vessel to Mazatlan it ascertained that under the laws of Mexico no ship carrying the Mexican flag could be operated by a foreign corporation, and that, upon that fact being brought to the notice of the Cucharas Mining Company, the president of that company, in a letter to the president of the El Cambio Gold Mining Company, wrote:

"I am in receipt of a letter from Mr. H. P. Durrell, inclosing letters from your attorneys, Taylor & Howat, and Messrs. Wholen & Bartning, of Mazatlan, stating that it is impossible for us to operate the steamship Arrow with a foreign company. We note that you think it best to organize a Mexican company with $50,000 capitalization. If it does not cost too much to organize this company, and cause too much delay on account of red tape, I think it would be the best way out of it. If, however, the cost is excessive, and there will be great delay, I think it would be much better for you to do as your attorneys suggest, and transfer the vessel to your agents at Mazatlan, and operate the boat in their name, of course, having our ownerships set forth properly with a private contract. Inasmuch as most of the business will have to go through your agents' hands, I am inclined to think this would be the best way out of it. However, you are on the ground and understand the situation better than I do. Therefore we will leave the matter in your hands, and hereby give our consent to the necessary changes in our contract with your company to cover this operation of the steamer under the plan as set forth above."

In its amended complaint the plaintiff in error alleged:

"That the transfer of said vessel and her equipment and paraphernalia to said Mexican corporation was substituted for the agreement to transfer the one-half interest therein to the defendants."

The above letter does not sustain that averment, and there was no other proof tending to sustain it; and as it appeared from the evidence that the plaintiff in error never did deliver or tender to the contemplated vendee the itemized bill provided for by the contract, and never did deliver or tender to it any bill of sale or other instrument sufficient, or even purporting to pass to the vendee the half interest in the vessel and her equipment, as provided for in the written contract, and that the ship was lost before the consummation of the contemplated sale, the court below was clearly right in giving, as it did, a judgment for nonsuit against the plaintiff.

The judgment is affirmed.

(172 Fed. 368.)

THE GHAZEE.

(Circuit Court of Appeals, Second Circuit. June 15, 1909.)

No. 265.

1. SHIPPING (§ 132*)—CONNECTING CARRIERS—SUIT FOR SHORT DELIVERY OF CARGO—BURDEN OF PROOF.

When it is shown that goods, when delivered by a vessel which was the last carrier to the consignee, were deficient in quantity, the presumption is that the missing goods were delivered to such vessel, and the prima facie case so made out is not only one of liability against the owner, but of a maritime lien against the ship, and the burden rests upon her to prove that she delivered all that she received.

[Ed. Note.—For other cases, see Shipping, Dec. Dig. § 132.*

Presumptions and burden of proof as to cause of loss or injury to goods shipped by vessel, and diligence or negligence of carrier, see note to The Patria, 68 C. C. A. 398.]

2. SHIPPING (§ 141*)—LOSS OF CARGO—EXEMPTION OF LIABILITY IN BILL OF LADING.

An exemption in a bill of lading of liability for loss of cargo by theft does not relieve the vessel, where there was negligence on her part which contributed to or facilitated the theft.

[Ed. Note.—For other cases, see Shipping, Dec. Dig. § 141.*]

Appeal from the District Court of the United States for the Southern District of New York.

Robinson, Biddle & Benedict (H. S. Hertwig and Wm. S. Montgomery, of counsel), for appellant.

J. Parker Kirlin and John M. Woolsey, for appellee.

Before LACOMBE, COXE, and NOYES, Circuit Judges.

PER CURIAM. This action was brought by the assignee of two through bills of lading to recover damages for the alleged loss of bristles out of cases shipped from Tientsin, China, to Shanghai on certain steamers and there transhipped to the steamship Ghazee for transportation to Boston.

It is admitted that all the cases in question were delivered to the Ghazee and were carried by her to Boston, and the testimony is uncontradicted that part of their contents, amounting in all to 830 pounds and valued at $1,500, were missing from the cases when they were

delivered to the consignee. Indeed, before the trial it was stipulated by the parties that there were more bristles delivered to the first carrier at Tientsin than were delivered to the consignee by the Ghazee on her discharge at Boston.

The defenses of the Ghazee were: (1) That she delivered the goods in the same condition in which she received them; (2) that there was no proof that the missing bristles had been delivered on board her, and, consequently, no maritime lien was established; (3) that she was relieved from liability by the following exceptions in the bill of lading:

"The acts of God, * * * robbers or thieves by land or sea, on board, in craft, or on shore, whether in the service of the shipowner or not. * * *
"Merchandise on wharf in craft or elsewhere awaiting shipment or delivery is absolutely at shipper's or consignee's risk."

It is well settled by the authorities that:

"A connecting carrier who has completed the transportation and delivered the goods to the consignee in a damaged condition or deficient in quantity will be held liable in an action for the damage or deficiency without proof that it was occasioned by his fault, unless he can show that he received them in the condition in which they were delivered." 3 Hutchinson on Carriers, § 1384, and cases cited.

Or, as stated by the claimant in its brief in speaking of the proof required of such a carrier:

"He has merely to show that the cargo was not damaged while in his custody, and that he delivered it in the same condition in which he received it."

This rule is, manifestly, as applicable to carriers by sea as to land carriers, and, in our opinion, is unaffected in its operation by the principle that in order to maintain a proceeding in rem delivery of the cargo upon the vessel must be shown. When it appears that goods delivered by the last carrier to the consignee are deficient in quantity, the presumption is that the missing goods were delivered to such carrier; and the prima facie case made out is not only one in which a carrier's liability is shown, but in which a maritime lien against the ship is established. Presumptively the missing bristles were delivered on board the Ghazee. Unless she sustained the burden of proof that they were not so delivered, she was liable in this action.

Now the burden was upon the Ghazee to establish a negative—that the goods were not lost or stolen while in her custody. She attempted to do this by showing: That her officers watched the cases as they came over the ship's side and were being stowed in the hold and saw nothing wrong; that the cases went into a part of the hold where it would have been very difficult to broach them; that on several occasions the hold was inspected, and no change in the condition of the cases was seen; and that no bristles were found on the deck. This testimony went far to show that the cases were not opened while upon the ship, but did not go far enough. The chain of negative proof required was incomplete. The proof left several hypotheses consistent with the loss of the bristles upon the ship and with her liability therefor. Thus, for example, it appears that the ship lay eight days at Shanghai, and that two quartermasters were on duty at night. These men were not called as witnesses. In the absence of any proof it can-

not be assumed that they did their full duty. For all that appears they may have failed in the performance of their duties and through negligence made it possible for thieves to enter the holds, extract the bristles, and put back the cases. In such a case the exemption in the bill of lading would not relieve the ship. While a general exemption against thieves may be valid, it is not to be construed as including or as applicable to a case where there was negligence on the part of the ship which contributed to the theft or facilitated it. Cunard S. S. Co. v. Kelley, 115 Fed. 686, 53 C. C. A. 310.

Of course we are not expressing an opinion that the bristles were stolen in the manner suggested. We merely point out that they might have been so taken to show that the ship failed to remove the presumption against her. She assumed a difficult task—to establish a negative. But the difficulty in establishing it in no way relieved her from the burden of doing so if she were to escape liability, and, as we have seen, the vessel has not sustained this burden. She has merely presented evidence from which inferences both ways may be drawn. She has failed to fulfill the obligation of showing the fact that the loss did not occur while the goods were in her custody.

The decree of the District Court is reversed, with costs, and the cause remanded, with instructions to enter a decree for the libelant for its damages—to be ascertained in the usual way—and costs.

(172 Fed. 370.)

THE SENECA.

(Circuit Court of Appeals, Second Circuit. June 15, 1909.)

No. 270.

SHIPPING (§ 116*)—SUIT FOR SHORT DELIVERY OF CARGO—BURDEN OF PROOF.

Where through bills of lading for boxes of bristles recited that the weight and quantity were unknown, the burden rests upon the shipper to show their weight, when received, in order to hold the last carrier liable for a claimed short weight in the quantity delivered.

[Ed. Note.—For other cases, see Shipping, Cent. Dig. § 435; Dec. Dig. § 116.*]

Appeal from the District Court of the United States for the Southern District of New York.

For opinion below, see 163 Fed. 591.

J. Parker Kirlin and John M. Woolsey, for appellant.

William M. Beard, Walter P. Paret, and James T. Kilbreth, for appellees.

Before LACOMBE, COXE, and NOYES, Circuit Judges.

PER CURIAM. This action—likewise for the loss of bristles—is, with respect to the burden of proof, the converse of that of The Ghazee (decided at this time) 172 Fed. 368.[1] In that case it was stipulated that more bristles were delivered to the first carrier than were delivered to the consignee, and it was held, under the last carrier rule, that the burden was upon the ship to show that it delivered them in the condition in which they were received. In this case there was

[1] 97 C. C. A. 66.

no such stipulation, and the burden was upon the libelant to show that the bristles which were abstracted were delivered to the ship.

This burden of showing delivery to the ship we think was not sustained by the libelant. There was no positive testimony that the boxes were full of bristles when delivered on board the ship. The libelant's whole case depended upon showing the weights; and yet the bill of lading contained no notation of weight and recited that weight, quality, quantity, contents, and value were unknown. The boxes were not in fact weighed after they were placed on board the ship, and it does not appear that they were weighed before. No evidence of negligence in the care or custody of the cargo during the voyage was offered by the libelants. That which was offered came from the ship and tended to show that the boxes were not broached during the voyage.

All the evidence of the weight of the 50 cases relied upon by the libelants was a receipt or boat note signed by the mate of the ship after the issuance of the bill of lading containing a notation "Pls 50," coupled with testimony that such notation meant "50 piculs"; a picul being a Chinese weight of 133⅓ pounds. But while this receipt was admissible in evidence against the vessel, it was subject to explanation. We are satisfied that the mate who signed it did not understand the meaning of the obscure notation of a foreign weight. He knew that the boxes had not in fact been weighed, and we think it clear that there was no intention upon his part in signing the boat note to vary the recital of the bill of lading that the weights were unknown. Even to a person understanding the meaning of the phrase, the notation would seem to be a rough estimate, rather than an accurate statement of weights. In our opinion the notation, under the circumstances, was insufficient either to show the weight of the boxes or to shift to the ship the burden of proving its inaccuracy. No principle of estoppel operated against her.

We think that the libelants failed to show that the bristles which were abstracted were ever delivered on board the Seneca and, consequently, that the libel should have been dismissed.

The decree of the District Court is reversed, with costs, and the case remanded, with instructions to dismiss the libel, with costs.

(172 Fed. 371.)

WESTINGHOUSE ELECTRIC & MFG. CO. v. TOLEDO, P. C. & L. RY. CO.

(Circuit Court of Appeals, Sixth Circuit. July 29, 1909.)

No. 1,868.

1. PATENTS (§ 157*)—CONSTRUCTION—PAPER PATENTS.

While the fact that the device of a patent has never been put in use does not affect the validity of the patent, it is ground for giving it a strict construction.

[Ed. Note.—For other cases, see Patents, Dec. Dig. § 157.*]

2. PATENTS (§ 112*)—VALIDITY—PRESUMPTION FROM ISSUANCE.

The presumption of the validity of a patent arising from its issuance is weakened by the fact that certain prior patents, claimed to anticipate, were not cited to nor considered by the examiner.

[Ed. Note.—For other cases, see Patents, Cent. Dig. § 164; Dec. Dig. § 112.*]

3. PATENTS (§ 328*)—ANTICIPATION—ELECTRIC CONTROLLER.

The Brown patent, No. 618,163, claim 6, for a method of electrical control, designed to secure an acceleration of speed of motors and at the same time protect them from injury, is void for anticipation by the Potter patent, No. 524,396.

[Ed. Note.—For other cases, see Patents, Dec. Dig. § 328.*]

Appeal from the Circuit Court of the United States for the Northern District of Ohio.

L. F. H. Betts, for appellant.

Thomas F. Sheridan and Clifton V. Edwards, for appellee.

Before LURTON and SEVERENS, Circuit Judges, and COCHRAN, District Judge.

COCHRAN, District Judge. This is an appeal from a decree dismissing the bill in a suit for patent infringement. The patent is No. 618,163, issued January 24, 1899, to W. M. Brown, assignor, and assigned to appellant, complainant below, May 27, 1902. The patent is entitled as one for "electric motor control." More definitely, it is one for a method of electric motor control and for an apparatus to practice such method. It contains twelve claims. The first six relate to the method, and the other six to the apparatus. Claim 6, the last of the method claims, is the only one put in suit. It is what is called a "paper patent," in that it has never been used by the appellant, and that though it is in the business of selling electrical controllers. The excuse given for not using it heretofore is that its use would require a motor adapted thereto, and up to this time it has not deemed it best to put such a motor on the market. The validity of the patent, however, is not affected by its nonuser. Continental Paper Bag Co. v. Eastern Paper Bag Co., 210 U. S. 405, 28 Sup. Ct. 748, 52 L. Ed. 1122. But it may be said to have a bearing on its construction. In view thereof the patent should not be given a broad or liberal construction. Judge Putnam, in the case of Bradford v. Belknap Motor Co. (C. C.) 105 Fed. 63, with reference to such a patent, said:

"We must proceed with great caution and avoid giving the complainant the benefit of anything beyond what his invention and patent clearly require."

The grounds on which the lower court dismissed the bill are thus set forth in the conclusion of Judge Tayler's opinion:

"So I come to the conclusion:

"1. That all that is important or useful in the patent in suit has been long before discovered and used.

"2. The departure in the patent in suit from preceding forms is so slight and its absence of advance in real usefulness so apparent that we can readily understand why it has never gone into practical use.

"3. Whatever improvement Brown made, it was an improvement obvious to any one skilled in the art and so slight as to be of negligible value."

We do not understand from this that it was thought that the patent is not, to a certain extent, at least, an advance on the prior art. It seems to be conceded that it is; the position being that the advance is so slight as to be of no real value, and, such as it is, is obvious to one skilled in the art. The appellee's contention, however, is that it is not to any extent an advance thereon, having been fully anticipated by

disclosures made in prior patents. The patents relied on are: No. 435,958, issued September 9, 1890, to M. J. Wightman, assignor; No. 444,900, issued January 20, 1891 to M. J. Wightman, assignor; No. 524,396, issued August 14, 1894, to W. B. Potter, assignor; and No. 587,442, issued August 31, 1897, to W. H. Knight and W. B. Potter.

The application for the Knight and Potter patent antedates the Potter patent. The first Wightman and the Knight and Potter patents are each for a method of electric motor control. The second Wightman and the Potter patents are each for an apparatus to practice a method of such control. Each of these, as a matter of course, discloses the method which it is adapted to practice.

It will help us to determine whether claim 6, the one in suit, was so anticipated to understand, to a certain extent at least, the nature of the methods covered by the first five claims, and it will clear up the situation if we address ourselves to certain preliminary matters before proceeding to a consideration of said claims.

Those methods are applicable only where a plurality of electric motors are in use, and that where the field of each motor is provided with duplicate windings. In the specification they are treated as applicable where two such motors are in use, and to them when used in operating a street railway car. In disposing of this case we will so limit ourselves.

An electric motor consists of two parts, one stationary and the other rotary. The former is called the "field," and the latter the "armature." The latter lies within the former. Each itself consists of two subordinate parts, a soft iron core and an insulated copper wire wound around the core. What we mean when we say that the field of each of the two motors has duplicate windings is that it has two coils of such wire wound around its core. The armature and the field winding of each motor are in series, i. e., in continuous relation. Their function is to conduct the electric current coming to them from the trolley wire around their respective cores, from whence it passes to the ground. In passing around the cores the current magnetizes them, and it is the magnetic action so induced that causes the armatures and, sequentially, the axles of the car wheels to which they are attached and those wheels to rotate and the car to move.

The control of the two electric motors is effected by controlling the electric current which flows through them. The apparatus by which it is controlled is termed the "controller," or "switch." It is the cylindrically shaped structure or drum stationed on the car platform on top of which is a crank with a handle whereby the motorman operates it. Such control is exercised to effect several separate and distinct ends, each of which is essential to the successful running of the car. They are as follows, to wit: Starting the car, stopping it, accelerating or lowering its speed, reversing its direction, and preventing the motors being burnt out in the course of effecting the other ends. Conceivably an invention relating to a method of control of two motors so used may be so broad as to cover all the ends for which it may be exercised or it may be limited to some one of them. Here each of the first five of the method claims is limited to a single end, to wit, accelerating the speed of the car. Claim 6 has to do with so

accelerating and at the same time preventing the motors being burnt out.

In dealing with the first five of the method claims we will consider them together. The patent in suit discloses two separate and distinct methods of accelerating the speed of rotation of the armatures of the two motors. One is by varying the circuit relations of the field windings, i. e., the course of the current therethrough, in such a way as to reduce in successive steps the opposition to its flow until the minimum of possible opposition is reached, and doing this first with one motor and then with the other. By so doing, as the opposition is reduced, the flow of the current through the motors is increased and the speed of rotation accelerated in successive steps.

There are two kinds of possible opposition to such flow. One is termed "ohmic resistance," and the other "counter-electro-motive force." The former is the opposition of the wire through which the current flows, and varies with the size and length thereof. It is passive or dead and is analogous to that which friction gives to the flow of water through a pipe. The latter is active or live and is analogous to that which the load on a water motor causes the vanes or blades thereof to present to the flow of water therethrough. It is generated by the armatures of the motors and is dependent on two factors, the speed of rotation of the armatures and the strength of magnetic action of the fields. This strength is itself dependent on two factors, the quantity—amperes—of current flowing around the cores, and the number of times it flows around them; the product of the two being termed "ampere-turns." The force so generated is like that of the current itself, except that it acts in the opposite direction, and hence its name "counter-electro-motive force." Certain differences between these two kinds of opposition need to be emphasized. Opposition from such resistance exists whether the armatures are rotating or not; whereas, that from such force can exist only when they are rotating. Again, opposition from such resistance can exist as well outside as within the motors; whereas, that from such force exists only within the motors. And, further, opposition from such resistance consumes a portion of the current by turning it into heat, thereby wasting such portion thereof; whereas, opposition from such force does not waste any portion of the current, and it is the overcoming thereof by the magnetic force induced by the current that causes the armatures to rotate and the work to be done.

There are three possible variations of the circuit relations of the duplicate windings of a motor, i. e., of the course of the current therethrough. They may be in series, i. e., so related that the current flows through one and then through the other. They may be in parallel or multiple arc, i. e., so related that the current divides between them and the two portions thereof flow therethrough simultaneously. Or they may be out of relation, so that the current does not flow therethrough either successively or simultaneously, but only through one of them. This being out of relation may be either entire or partial, caused when partial by a shunt—a path of low resistance around one of the windings—in which case a slight portion of the current flows through the shunted winding. These three possible variations of the

circuit relations of the windings yield three grades of opposition from ohmic resistance, one to each variation. The maximum grade is when the windings are in series. The next highest grade is when they are out of relation. It is one-half of the maximum grade. The minimum grade is when they are in parallel. It is one-half of the intermediate grade and one-fourth of the maximum. They yield only two grades of opposition from counter-electro-motive force; two of them yielding the same grade of opposition from this source. The maximum grade is, as in the case of the maximum grade from ohmic resistance, when the windings are in series. The minimum grade is when they are out of relation or in parallel, and the existence of each grade of opposition from this source depends, as heretofore stated, on the fact that the armatures of the motors are rotating. Out of these three possible variations of the circuit relations of the duplicate windings of a motor there comes therefore three grades of opposition to the flow of current therethrough.

As a consequence of this, these three possible variations of these relations yield also three rates of speed of rotation of the armature of a motor; the minimum rate existing when the maximum grade of opposition exists, i. e., when the windings are in series, the next when the intermediate grade of opposition exists, i. e., when the windings are out of relation, and the maximum when the minimum grade of opposition exists, i. e., when the windings are in parallel. And, if the opposition to the flow of the current is reduced first in one motor and then in the other, in the order of the grades thereof, the maximum opposition existing in both motors when the reduction begins, four distinct grades of opposition from that then existing are yielded, and the speed of rotation is accelerated in four successive steps from the rate then existing, assuming the armatures of the motors to be then rotating.

The other method of accelerating the speed of such rotation disclosed by the patent is by varying the circuit relations of the motors as a whole, and not simply of the duplicate windings thereof. There are three possible variations thereof, the same as in the case of the duplicate windings. They may be in series—out of relation—or in parallel. As the first and last are the only ones used in accelerating the speed, no further reference need be made here to the second one. When the two motors are in series, the current flows through them successively, i. e., first through one and then through the other. When in parallel, it divides between them, and the two portions thereof flow therethrough simultaneously. The lowest rate of speed exists when the two motors are in series, and that existing when they are in parallel may be said to be double what it is when they are in series, assuming the motors to be able to hold up under this condition. This is so because when the motors are in series the force or voltage of the current is divided between them; whereas, when they are in parallel each motor has the full force or voltage.

The method of acceleration covered by each of the first five method claims of the patent in suit is a combination of these two distinct methods of acceleration, and the only difference between the claims is in their phraseology. The way in which the patentee combined them

is shown diagrammatically in Fig. 2 accompanying the specification of the patent. It is as follows, to wit:

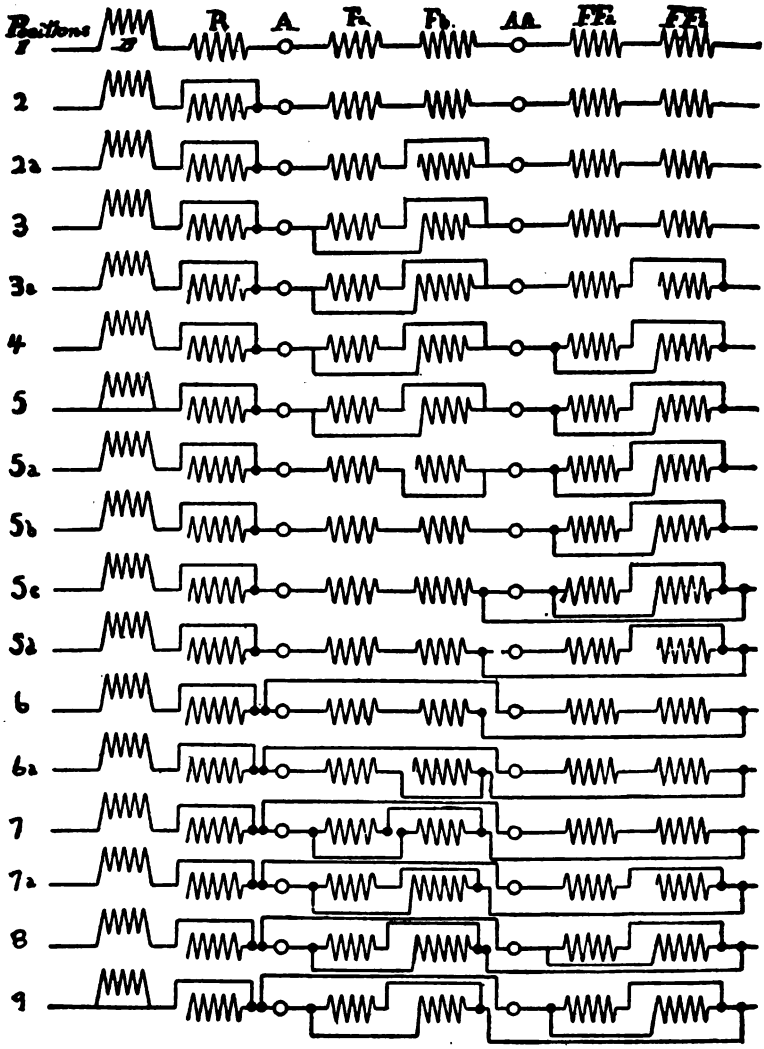

Fig. 2.

In explaining this diagram we would, for the present, ignore so much thereof as is under the letters B and R. That portion thereof has nothing to do with what is covered by the claims of the patent. A represents the armature of one motor, and Fa and Fb the two windings of the field of that motor. AA represents the armature of the other motor, and FFa and FFb the two windings of its field. 1 represents the position at starting, and 2, 3, 4, 5, 6, 7, 8, and 9 represent eight different running positions. 2a represents a transition position

between running positions 2 and 3; 3a a like position between running positions 3 and 4; 5a, 5b, 5c, 5d, four transition positions between running positions 5 and 6; 6a a transition position between running positions 6 and 7; and 7a a like position between running positions 7 and 8. It will be noted that at starting position 1, the windings of each motor are in series, presenting the highest grade of opposition to the flow of current from ohmic resistance, that from counter-electro-motive force not existing, as the armatures are not then rotating. At position 2 the same opposition is maintained; the armatures now rotating. At position 2a the field windings of the left-hand motor are out of relation, and the current flows through but one of them, presenting the next lowest grade of opposition of both kinds in that motor. At position 3 the field windings of that motor are in parallel, presenting the lowest grade of opposition at all possible in that motor; that from ohmic resistance alone being thereby lowered. At positions 3a and 4 exactly the same course as in positions 2a and 3 is followed with the right-hand motor. Thus it is that at positions 4 and 5 opposition to the flow of the current when the two motors are in series is reduced to its lowest grade, and the armatures thereof are rotating at their highest rate of speed with the motors in that relation. In reaching this rate of speed, including it, we have four distinct rates of speed.

Positions 5a, 5b, 5c, 5d, and 6 restore exactly the same amount of opposition that existed at starting position 1. This is so because position 6 finds the field windings of each motor in series. There is this significant difference, however, between the two positions. At position 1 the two motors were in series; whereas, in position 6 they are in parallel, having become so in that position. Up to position 6 the first method of acceleration heretofore described has been in use. At position 6 the other method is called in, and by the change the rate of speed due to the parallel relation with the opposition within the motors at its highest is attained. A detailed consideration of these five positions is not in order here. They are covered by claim 6, the claim in suit, and will be considered fully when we reach that claim. Inasmuch, then, as when the two motors come into such relation the opposition within them is at its highest, just as at starting from rest when they were in series, the speed is capable of further acceleration by calling in the first method of acceleration which was then in use, i. e., by reducing the opposition by successive steps to its lowest grade, first in one motor and then in the other; and this is what is done in the remaining positions. At position 6a the field windings of the left-hand motor are out of relation so that the current flows through but one of them, thus presenting the next lowest grade of opposition of both kinds in that motor to that existing in position 6. At position 7 the field windings of that motor are in parallel, presenting the lowest grade of opposition; that from ohmic resistance alone being thereby lowered, and the lowest grade of opposition at all possible in that motor. At position 7a and 8 exactly the same course as in position 6a and 7 is followed with the right-hand motor, and at position 8 the highest rate of speed possible is attained. Position 9 is exactly the same as position 8—just as position 5 is the same as position 4. The signifi-

cance of this will appear when we take up that portion of the diagram which we have been ignoring, which we will shortly do.

In reaching the rate of speed at positions 8 and 9 we have five distinct rates of speed, including it, from that existing at position 5, thus making nine in all, so far as this portion of the diagram is concerned.

This detailed explanation of the diagram shows that the method of acceleration covered by the patent is a combination of the two methods of acceleration pointed out and how it combines them.

But, before passing to claim 6, a word or two should be said as to that portion of the diagram which thus far we have ignored. Though, as stated, it has no relation to anything covered by the claims of the patent, an understanding of it will shed light on our path. We have noted that one of the differences between opposition from ohmic resistance and that from counter-electro-motive force is that the former can exist outside of the motors; whereas, the latter cannot. It is possible therefore to provide in the car circuit between the controller and the motors a winding of wire, which, if in circuit, will be the source of opposition from ohmic resistance, exactly as the field windings thereof are; and, if provided, cutting same out of circuit, and thereby reducing the opposition arising therefrom, will accelerate the speed of the car, just as reducing the opposition from internal ohmic resistance will do so. What the ignored portion of the diagram covers is two such windings. They are in the car circuit between the active part of the controller and the motors. One of them is the winding of what is termed the blow-out magnet, designated by the letter B. It is within the drum of the controller. It is around a soft iron core, which the current in passing through the winding magnetizes. Its function is to prevent formation of arcs when the contacts of the controller are broken in the course of operation. Though such is its function, cutting it out of circuit, and thereby removing such opposition as it affords, will accelerate, to a certain extent at least, the speed of rotation of the armatures of the two motors. It is claimed that the opposition which it affords is negligible; but the diagram evidences that the patentee thought it afforded enough opposition to make its cutting out of circuit cause an appreciable acceleration in speed of rotation, for he cuts it out twice, and there is no explanation for his doing so except to accelerate such speed. This he does at positions 5 and 9, and this is the only particular in which those positions differ from the immediately preceding positions, to wit, 4 and 8. At position 4 the highest rate of speed with the motors in series has been attained, leaving out of consideration this winding, and by cutting it out in position 5 a still higher rate of speed in that relation is attained. At position 8, without reference thereto, the highest rate of speed with the motors in parallel has been attained, and the cutting it out in position 9 yields a still higher rate of speed in the parallel relation—the highest rate of speed that is possible for the armatures to attain under any conditions. Inasmuch as positions 5 and 9 are likely to be positions of continuous running, during which the controller connections are not broken and the magnet is not needed to blow out arcs, there is no reason why it should not be cut out of circuit and thus accelerate the speed.

The other winding referred to is termed the "rheostat" or "external resistance," and is designated by the letter R. It is generally placed under the car body, and may consist of an assemblage of plates instead of a coil or coils of wire. In the diagram it is shown in but one position, and that is position 1, the starting position, when the current is turned into the car circuit and the armatures begin to rotate. In position 2 it is cut out and remains out thereafter. This is the only particular in which position 2 differs from position 1. The effect of cutting it out is to reduce that much opposition to the flow of the current and to accelerate the speed of rotation over what it was in position 1, just as the cutting out of the winding of the blow-out magnet in positions 5 and 9 did likewise. We have thus three additional rates of speed by so cutting out these two windings, as stated, or twelve in all, in an ascending scale from the lowest to the highest.

This brings us to claim 6, the one in suit. The method covered by it, as heretofore stated, is one for accelerating the speed of rotation of the armatures and at the same time for preventing their being burnt out in the process of acceleration. It is in these words:

"The method of shifting two motors from series to parallel relation, consisting of strengthening the field and ohmic resistance of one motor, then placing a shunt around the other motor, and then placing said shunted motor with its field strength and ohmic resistance increased in parallel with the first mentioned motor."

Its nature, as also heretofore stated, is disclosed by so much of positions 5a, 5b, 5c, 5d, and 6, i. e., the transition positions 5a, 5b, 5c, and 5d and the running position 6 of the diagram as are not under the letters B and R. It consists, according to the claim, of three separate and distinct steps, to be taken successively.

The first one is "strengthening the field and ohmic resistance of one motor." Strengthening the field, as we have seen, increases the counter-electro-motive force. By this step, then, both forms of opposition within the motor are brought into play. The manner, however, of so doing, i. e., of increasing the strength of field and ohmic resistance, or the extent of so doing is not stated, as the language is general and indefinite; but the diagram and explanation thereof in the specification discloses a way of so doing, and that to the maximum, so that this step yields in the motor its maximum grade of opposition to the current. It is shown in positions 5a and 5b. In position 5a the field circuit of the left-hand motor is changed from what it is in position 5. There the two windings were in parallel. The change in position 5a is to out of relation entirely. The effect of this is to double the ohmic resistance of that motor; the strength of the field remaining as before. In position 5b the field circuit thereof is again changed. The windings are put in series. The effect of this is to again double the ohmic resistance and at the same time the strength of the field. It is thus seen that by this step, taken in this way, the field windings of this motor are shifted back from parallel to series, and that in exactly the same way in which they had theretofore been shifted from series to parallel.

The second step is "placing a shunt around the other motor," thereby putting the two motors out of relation almost entirely. This is shown by position 5c.

The third and last step is "placing said shunted motor with its field strength and ohmic resistance increased in parallel with the first-mentioned motor." By this step the two motors are changed from out of relation almost entirely to parallel relation, and simultaneously therewith the field strength and ohmic resistance of the other or shunted motor is increased and both forms of opposition within it are brought into play. It is not said here how the field strength and ohmic resistance thereof is increased, or the extent to which this is done. A way of so doing, however, is disclosed by the diagram and explanation thereof, as in the case of the first step—the same way as there—and the increase is to the maximum, thus yielding the maximum grade of opposition in this motor. It is by shifting the windings of the motor back from parallel to series in the same way in which they had theretofore been shifted from series to parallel. This step is covered by positions 5d and 6, though position 5d would seem to go beyond the step as given in the claim in putting the motors out of relation entirely.

It is thus seen that the method covered by the claim in question is complex. It involves a change in the motor circuit, i. e., from series to parallel, and also in the field circuits, i. e., from parallel to series. In each instance the change is not instantaneous but first to out of relation. The change in the motor circuit has to do with accelerating the speed; whereas, that in the field circuit has to do with preventing the motors being burnt out by the change in the motor circuit. The danger of being burnt out is due to the sudden inrush of current upon the change being made, caused by each motor receiving the entire voltage thereof, and the change in the field circuit prevents such burning out by developing the opposition within the motors to the flow of the current to its maximum at the time the change in the motor circuit is completed. It may be said also that the change in the field circuits has to do with lessening the rate of acceleration due to the change in the motor circuit and making it so that, whilst the motors remain in parallel relation, by changing the field circuits successively from series to parallel relation, the same as was done before the change in the motor circuit, the opposition within the motors may be gradually withdrawn and the rate of speed gradually accelerated.

Claim 6, however, does not expressly disclose that the method covered by it was intended to effect any such ends. In this particular it is unlike the other five method claims, as each of them in characterizing the method covered by it as one of acceleration did so disclose the end intended to be effected by it. Claim 6 characterizes the method covered by it simply as one of "shifting two motors from series to parallel relation." In so doing it is not strictly accurate, for, as we have seen, it covers considerably more than a change in the motor circuit. Strictly speaking, there are but two methods of changing two motors from series to parallel relation. One is instantaneously without any intermediate step, as is done in the Condict patent hereafter referred to. The other is by first putting them out of relation and then in parallel as here. But claim 6, as we have seen, covers more than this, in that it provides for changes in the field circuits; the change in one taking place before the motor circuit is altered and whilst the

motors are still in series and the other simultaneously with the motors attaining the parallel relation. Inasmuch, however, as the latter changes are in order to make the change in the motor circuit effective and to limit its effect, broadly speaking, the method covered by the claim may be said to be one of shifting "two motors from series to parallel relation."

Such, then, is the nature of the method covered by this claim and the ends effected by it. It is to be noted that it is a course of procedure in relation to and within the motor circuit by which the speed is accelerated and the internal resources of the motors are so marshaled as to prevent the inrushing current harming the motors upon their attaining the parallel relation and to limit the increase of acceleration. It has nothing whatever to do with the car circuit outside of the motor circuit. In this particular it is just like the method covered by the purely acceleration claims. It is confined to the motor circuit, and by it also the internal resources of the motors are so marshaled as to provide, in connection with that arising from the change in that circuit, nine distinct rates of speed in an ascending scale. The patentee's mind was concentrated on the motor and field circuits. In the acceleration claims he so handled them as to gradually accelerate the speed from the lowest to the highest rate thereof; and in the sixth claim he so handled them as to accelerate the speed a certain degree and to prevent harm to the motors from so accelerating it.

Claim 6, however, is a subordinate feature of the patent. Nor are any of the acceleration claims in their entirety the main feature thereof. Rather a portion of those claims is the central feature thereof, to wit, so far as they cover the changes in the field circuits both in the series and parallel relation. The patentee thus expresses himself on this subject in the specification:

"I provide switches by the movement of which I may effect gradual acceleration in the speed of the motors by varying in successive steps the field strength and ohmic resistance of one motor without changing that of the other. Having lowered the field strength and ohmic resistance of one motor, I then pass through the same steps with the second motor. Larger changes of speed I obtain by making series multiple changes of the motors as a whole, so that the central feature of my invention is that the smaller changes in speed, both in moving through the series and parallel positions are made by the circuit changes of the field of first one motor and then the other."

That portion of the method of claim 6 which has to do with preventing harm to the motors when they are placed in parallel is not, however, the only way of preventing such harm under this circumstance. The specification of the patent and the diagram of Fig. 2, as heretofore indicated, disclose a method of preventing similar harm to the motors at starting position 1 of the diagram, when, as we have seen, there is no counter-electro-motive force to check the flow of the current. It consists in the use of the rheostat or external resistance, which in addition to the ohmic resistance within the motors is sufficient to prevent harm to them. This method of preventing harm to the motors can be used when they are changed from series to parallel. It differs from the other method in that it amounts to calling in outside help; whereas, that method relies on the motors to protect themselves. And, though there may be no necessity for so doing, it may be used in

connection with the other method of preventing harm, thus affording, as it were, double protection.

It seems clear that the patentee had in mind the use of this method of protection when the motors are changed from series to parallel as well as at starting and considered that, as a rule at least, there would be no necessity to use it when such change was being made in connection with the method of protection disclosed by claim 6, for, in describing position 6 of that claim in the specification, he expressly excluded its use. He said:

"The first multiple position, position 6, in which, without inserting any external resistance, armature AA is connected with the trolley side. * * * Simultaneously the series connection is completed between FFa and FFb. * * * The two motors are now in multiple with each other, and, as this would tend to cause a very sudden acceleration, the field coils of the motors are arranged with their greatest strength so as to increase the counter-electromotive force of the motors; the same arrangement also giving the highest ohmic resistance of each motor."

But it seems equally clear that the patentee also thought that conditions might arise when it would be "desirable and suitable" to use such additional outside protection in connection with that provided by claim 6, though he gave no indication as to what those conditions were. To make this good we will have to take into consideration all that the patentee has said in relation to the use of external resistance, for he refers to it several times in addition to the reference contained in the quotation just made from the specification; and to comprehend his full meaning reference should be had also to the patent issued to G. H. Condict, November 20, 1888, No. 393,323, which undoubtedly Brown must have had in mind when conceiving his invention. It is for an apparatus, to wit, a switch, and not for a method of electric motor control. Condict seems to have been the first to solve the problem of shifting two motors from series to parallel relation in the course of their operation in order to accelerate the speed of rotation of their armatures. He seems not to have conceived the idea of dealing with the motors one at a time when they were in series and again when in parallel; but in both relations he dealt with both motors at the same time, and that in the same manner. Nor does he seem to have conceived the idea of changing the field circuits or the motor circuits from series to parallel mediately, i. e., through an intermediate step, to wit, by first putting them out of relation. He changed each immediately from the one relation to the other. Thus it was that he secured only four different rates of speed by manipulating the field and motor circuits. At starting he had the windings of each motor in series. He then changed them in each immediately from series to parallel. He then changed the motor circuit by changing the two motors immediately from series to parallel, simultaneously therewith changing the field circuits of each motor immediately from parallel to series. And finally he changed the field circuits of each motor; the motors being in parallel, immediately from series to parallel. In connection with each of these four changes he used external resistance. His rheostat was provided with four of such resistances. He used one at starting, two at the next change, and four at each of the other changes, and these resistances he removed gradually one at a time. In so doing he pro-

vided eleven rates of speed in addition to the four already mentioned, assuming them to be those existing when the resistances are all in use as intended, or fifteen in all. What we have said will be better understood if we insert here the diagram of the method practiced by Condict's switch prepared by appellee's expert. It is as follows, to wit:

Condict Patent Connections.

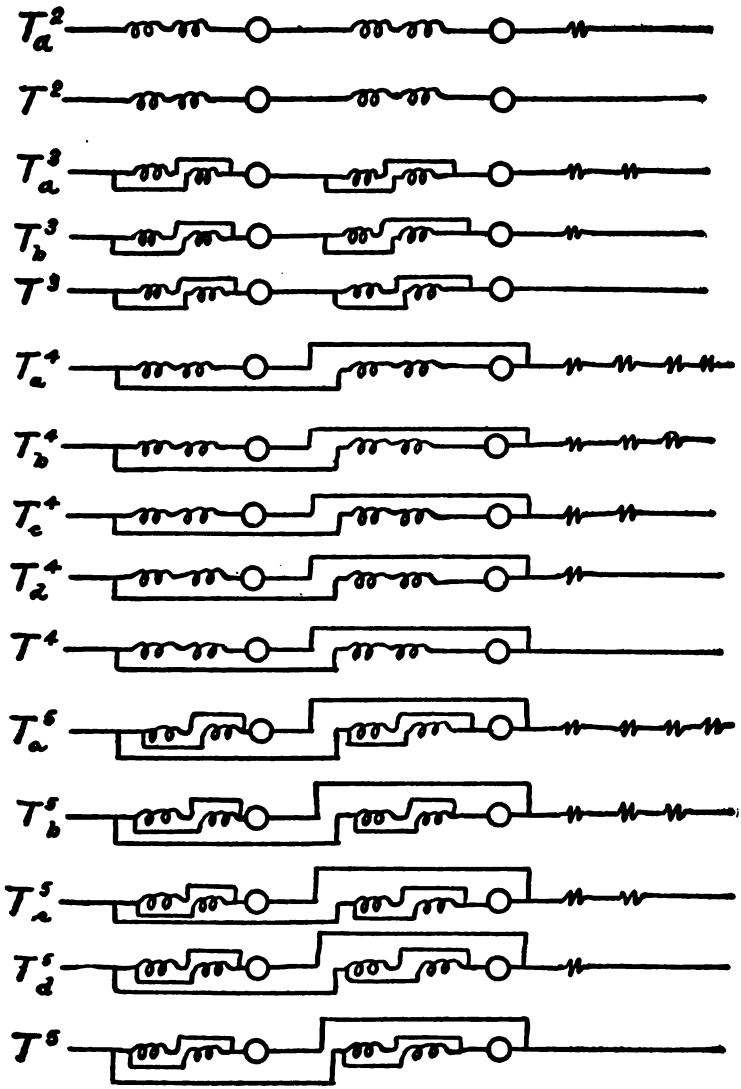

It may be truly said that Condict was wasteful in the use of external resistance, for, as heretofore stated, opposition to flow of current from ohmic resistance differs from that from counter-electromotive force, in that it consumes a portion of the current, turning it

into heat, and the production of current requires the expenditure of money. He seems to have used such resistance for protective purposes and to have cut it out gradually so as not to suddenly change the opposition to the current beyond a given amount, and yet its use in the way in which he used it and its gradual removal had the effect of producing many different rates of speed.

It is in connection with the method of this patent that the further references of Brown to the subject of external resistance now to be quoted are to be considered. In referring to the general object of his invention, he says that it has therefor "an improved method and apparatus for accelerating the motors and regulating the speed thereof in which the motor circuits are utilized so far as possible to gradate the flow and rate of acceleration, whereby as little as possible of the energy taken from the line shall be dissipated in wasteful external resistances." He does not say that by his method such dissipation is entirely excluded, but only that "as little as possible" thereof shall take place; and he does not limit this little as possible to the use of external resistance at starting, which the diagram shows. Indeed, there is reason to hold that he does not here refer to such use, because such use is not a part of his method. Nor has it connection therewith, as it does not begin until after the starting position is left. Certainly there is nothing here which excludes the use of external resistance in connection with his method, i. e., subsequent to starting, under certain conditions.

Again he says:

"Heretofore the controllers most generally used combine series multiple changes with successive steps in which external resistances are inserted or removed. It has been, however, proposed to employ the circuit changes of the coils of the motors themselves to effect the necessary changes; but such proposed forms have generally been faulty, in that they do not provide sufficiently small graduations of speed, and in that they make changes of the motor circuits which are too complicated and effect too sudden and serious reactions upon the motors. By my improved method, as hereinbefore outlined, I am enabled to obviate this difficulty, as I at no time make too abrupt a change in the motor circuit or one that will do any damage to the motors, and I am able to provide a simple form of apparatus in which a gradual acceleration of the motors is attained by the movement of a single operating lever and by which a number of speed regulations may be gained in which no power is wasted in external resistances."

This would seem to exclude the use of external resistance in connection with his method; but, in the light of a subsequent reference, the meaning can be no more than that it is not to be so used as a rule only and not under every condition.

Again he says:

"R represents an external resistance which I prefer to insert in circuit when the motors are starting from rest."

And in describing that position he says:

"In this position therefore the current passes through blow-out coil B, the artificial resistance R, and the armature and the field of both motors in series; the two windings of each field being also in series. This is shown in position 1 of Fig. 2. I prefer to use the resistance R at the first point, and even might take further resistance steps at this point, as the motors are without any counter-electro-motive force and therefore have only their ohmic resistance to cut down the current flow. This, however, might be dispensed with if desired."

These two statements amount to no more than an expression that the patentee favors the use of such resistance at starting only and might favor more resistance than that provided by the single resistance shown by the diagram at this point. They do not exclude use of resistance at other points under every condition.

Possibly, however, if this were all the patentee had to say on the subject of external resistance, there might be some ground for saying that he thought that under no conditions would external resistance be needed in connection with his invention, and that the only occasion for its being used under any conditions would be at starting; but this is not all he says thereon. He says further:

"It will be seen that without undue complication of parts I am enabled by my improved method and apparatus to gradually accelerate the motors without undue complication of motor circuits and without wasting any substantial current in dead or artificial resistances. However, it is, of course, obvious that I might in connection with my invention also use resistances where conditions make it desirable and suitable."

It is urged that here he has reference to its use in position 1; but that cannot be. He has already expressed himself as to its use there, and said that he not only preferred its use in that position, but that he might take further resistance steps at that time; and the expression is not that he preferred its use then where conditions made it "desirable and suitable." Indeed, there is no indication that its use in that position might be dispensed with under any conditions. Here he is alluding to its use in another connection, where, as a rule at least, it is not needed, but where conditions might make its use "desirable and suitable," and that is as it is expressed "in connection with my invention." Its use in position 1 is not in connection with his invention. His invention has nothing to do with position 1. It has to do with the later positions—those that illustrate the acceleration claims and claim 6. He does not say which position of his invention it might be used in connection with; but the language is broad enough to cover either. In the first sentence of the quotation he speaks of his method being such as to enable him "to gradually accelerate the motors" without the use of such resistance, and it is in this connection, i. e., in connection with the gradual acceleration of the motors, that he says in the last sentence thereof conditions might be such as to make its use "desirable and suitable." Claim 6 is a step in the gradual acceleration of the motors. We think it clear therefore that the patentee contemplated that conditions might be such as to call for the use of external resistance in connection with the method covered by claim 6.

But not only did he contemplate such use of external resistance, i. e., that afforded by the rheostat, in connection with that method, as shown by the specification, he also provided therein for the use of a certain amount of external resistance in connection therewith under all conditions, i. e., that amount afforded by the coil of the blow-out magnet. It is true that it is not provided for protective purposes, but follows only from the use of the blow-out magnet to prevent arc-ing in the controller. Still it is there. It is true also that the resistance so afforded does not amount to much. As stated heretofore, it is claimed by appellant to be so little as to be negligible, and its expert has shown

by calculation how little it is. Yet it is so much that its withdrawal affords an appreciable acceleration in the speed of rotation of the armatures. For, as stated heretofore, the cutting out of the coil in the running positions 5 and 9 when the magnet is not needed for blowing-out purposes is to be accounted for only on the ground that thereby such an acceleration will be caused, and at the same time the current which would otherwise be wasted will be saved.

Has, then, claim 6 been anticipated by either of the patents relied on? This is the vital question in the case, to which all we have been saying leads up, and we believe helpfully so. In the view we take of the case we do not find it necessary to refer to but two of those patents. They are the Wightman patent, No. 444,900, and the Potter patent, No. 524,396. As stated, each is for an apparatus to practice a method of electric motor control and discloses the method which it is adapted to practice. That method is applicable to two motors, each of which is supplied with duplicate windings and involves operation of the two motors first in series and then, after transition from series to parallel, in parallel. The method of the Wightman patent calls, in the process of acceleration, for the treatment of both motors alike simultaneously, both in the series and the parallel relation, and not for their treatment alike in succession, as in the Brown patent; and there is the further difference between it and the Brown patent that the variation of the duplicate windings in order to reduce opposition to the flow of the current and accelerate the speed does not consist in first cutting them out of relation entirely and then putting them in parallel but in cutting them out of relation partially by throwing a shunt around one of them. The different positions in the method are not diagrammed in the patent; but each expert has presented a diagram thereof. Their diagrams differ in the number of positions assigned to the method. That of appellant's expert is confined to the positions described in the specifications of the patent. Appellee's expert adds certain other positions which he thinks are essential to make the method operative. That of the former is as follows, to wit:

Wightman Patent 444900.

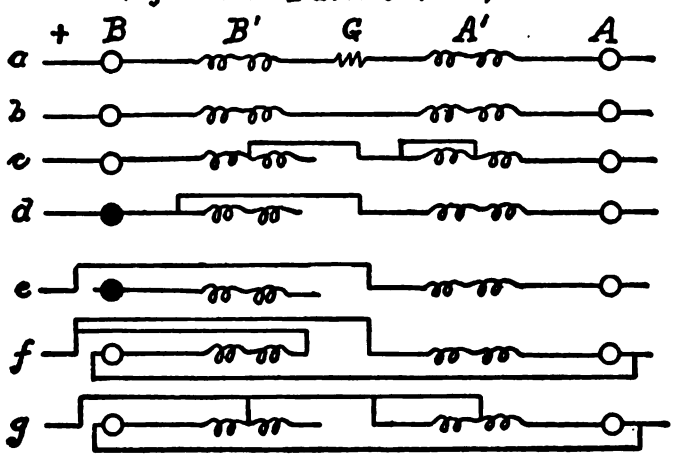

That of the latter is as follows, to wit:

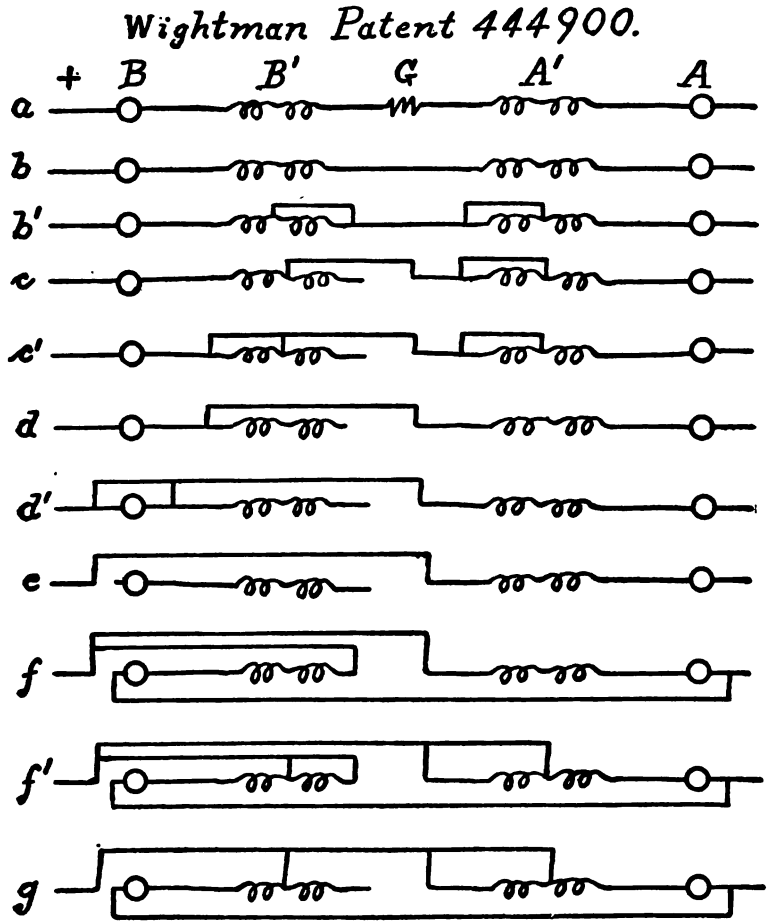

It will be seen that the positions so added are b', c', d', f'. It is agreed by both experts that the process of transition or shifting from series to parallel relation begins after position c is left and ends with position f, though, as heretofore noted, strictly speaking, shifting cannot be said to begin until some change is made from the series relation. The word "shifting" in claim 6 has a broader meaning and includes the step taken whilst the motors are still in series immediately preceding the making of the change. So, here, it is used to cover the step or steps taken whilst the motors are in series immediately preceding the change and preparatory thereto. As we are concerned only with the shifting or transition process, it is not necessary to refer to any other positions than those from position c to and including position f. BB' represent the armature and field coils of one motor, and A'A the field coils and armature of the other motor. G represents the rheostat

or external resistance. It will be noted that it is in circuit at starting and is then cut out of circuit and so left through all the other positions. In this particular there can be no question that Brown follows Wightman. In position c the minimum grade of opposition exists, and the armatures of the motors are at their maximum rotation with the motors in series, for one coil of the field of each motor is shunted from the circuit. Confining ourselves first to the diagram of appellant's expert, it must be accepted that Wightman's method is exactly that of the letter of claim 6 of Brown's patent. In position d the field and ohmic resistance of motor A'A, the right-hand motor, are strengthened by the removal of the shunt around one of the field windings thereof, so that they are both in series. There is, however, a difference here between Wightman and Brown. Wightman strengthens by adding the other winding. Brown strengthens by changing the windings from a parallel relation first to out of relation and then to series relation; but, if Brown's first step covers any method of strengthening the field and ohmic resistance, it is anticipated by any method thereof. If, however, it is limited to the method disclosed in the specification of his patent, still it is anticipated by Wightman, though Wightman's method is not the same as his, because it is an equivalent method. The appellant is forced to concede this because appellee's method is that of Wightman and not that of Brown. In view of this, it is not necessary that we commit ourselves to the position that it is an equivalent method, but simply to assume that it is. It is because either Brown's claim covers any method of strengthening or appellee's method is the equivalent of Brown that it can be claimed that appellee infringes Brown. If so, it follows necessarily that Wightman anticipates Brown.

In position e we have the second step of Brown. A shunt is placed around the left-hand motor. Appellant's expert made the point that such is not the case, because that motor is entirely out of circuit; but its counsel does not so contend, and we need not be detained here. Then in position f we have the third step of Brown. The shunted motor—the left-hand one—is placed with its field strength and ohmic resistance increased in parallel with the other motor.

So we think there can be no question that if we confine ourselves to the mere letter of Brown's claim, and go not a step beyond it, Wightman anticipated Brown. He has the same three steps, and no more, and that in Brown's order. But we do not consider that that attitude of caution which should be taken towards a paper patent requires us to be scribistic. If Wightman's method is not within the spirit of Brown's claim, it does not anticipate, and we understand the real nature of appellant's position as to this Wightman patent to be that his method is not within the real nature and meaning of Brown's claim. The basis of this position lies in the fact that, simultaneously with strengthening the field and ohmic resistance of the right-hand motor, Wightman, in position d, renders inactive, or, as it is called, "kills," the left-hand motor, and when he shunts it in position e it is in that condition. This is indicated in the diagram of appellant's expert by filling in solidly the armature of that motor. This is so because the windings thereof are out of circuit and shunted. This motor is inactive in that it is not the source of magnetic action. As its

armature winding is in circuit, of course, it furnishes internal ohmic resistance to that extent. There is room to contend that the real intent and meaning of Brown's claim is that, when the field and ohmic resistance of one motor are strengthened and a shunt is thrown around the other, the latter motor shall be active. It is so shown in Brown's diagram. If such is the case, then it would seem that it should be held that Wightman's method is not that of Brown, and hence does not anticipate; but, as the case does not hang on this Wightman patent, we do not find it necessary to determine whether this is so or its effect, if so, or whether the meaning of claim 6 is as contended. None of these matters are affected if Wightman's method is accepted to be as shown in the diagram of appellee's expert. As we view that diagram, in which, however, we may be mistaken, it is more favorable to appellee than that of its expert. It shows that in position c Wightman, before taking the first step of Brown, conceding position d to be his first step, killed the left-hand motor and rendered it inactive, so that it is possible to say that Wightman's method consists of four steps and Brown's of only three, and one who effects a thing by more steps than another does not affect it in the same way in which such other does.

Then, as to the Potter patent: We think that it is clear that it anticipates the sixth claim of the Brown patent. The apparatus covered by it is adapted to practice two methods which are slightly different. There may be some question as to whether that shown by Fig. 18 of the drawings accompanying the specification is an anticipation. It is that shown by Fig. 2 which we think anticipates. It is as follows, to wit:

FIG. 2.

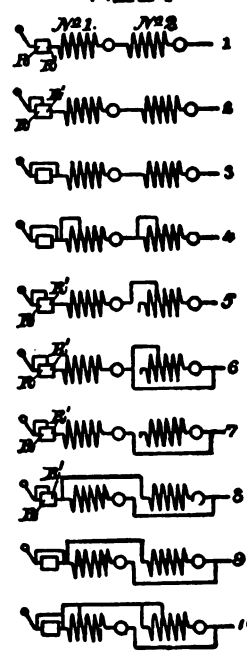

The method shown by that diagram is like those of the Condict and Wightman patents which we have considered, in that in the process of acceleration, other than where the change of the motors from series to parallel is involved, it treats both motors alike simultaneously, and not successively, as Brown does. It is also like the Wightman method, in that it affects the ohmic resistance and counter-electro-motive force of the motors by shunting or short-circuiting a portion of the field windings and removing the shunt or short circuit, and not by putting the windings out of relation and then in parallel and out of relation again and then in series, as Brown does. It is like Condict, Wightman, and Brown, in that it makes use of rheostatic external resistance at starting, but unlike them in that here it removes that resistance gradually, so as to get two rates of speed, shown by positions 2 and 3. It is unlike Wightman and like Condict, in that it makes use of such resistance as a protection during the shifting of the motors from series to parallel, though it does not make such an extravagant use thereof as Condict does; only half

of that used at starting being put in circuit. It differs from Brown in the matter of such resistance, in that it makes use of such portion thereof during the shifting process under all conditions; whereas, Brown, as a rule, does not then use it, using it only where conditions make its use "desirable and suitable." And yet they are alike, in that they both use external resistance during that process, Potter that from the rheostat, and Brown that from the coil of the blow-out magnet. When we come to the shifting process itself—that which is covered by claim 6 of the Brown patent—we find it disclosed as it exists in the Brown patent. At position 4 the ohmic resistance and counter-electro-motive force of the two motors are at their lowest, and with position 5 the preparation for the shifting begins; the motors being still in series. The ohmic resistance and field strength of motor No. 1 are increased. This is the first or preparatory step of claim 6 disclosed by positions 5a and 5b of Brown's patent. It is true that here, as in case of Wightman, the increase is secured by removing the shunt around a portion of the field winding of that motor, and not by changing those windings from parallel relation first to out of relation and then to series, as Brown does; but, as said when dealing with the Wightman patent, either claim 6 covers any method of increasing the field strength and ohmic resistance, and hence is anticipated by any method of so doing, or, if it is limited to the method disclosed in Brown's diagram and the descriptive part of his specification, appellant is forced to concede that the method of Potter is the equivalent thereof in order to make out infringement, because appellee uses the method of Potter and not that of Brown. Either Potter anticipates or appellee does not infringe. With position 6 the shifting process actually begins. This consists in placing a shunt around motor No. 2, which is the second step of Brown's sixth claim and position 5c of his diagram. Position 7 is exactly the same as Brown's position 5d. With position 8 the shifting process is completed by placing the shunted motor with its field strength and ohmic resistance increased in parallel with motor No. 1, which is the third and last step of that claim and the same as position 6 of that diagram.

In the first step, when the field strength and ohmic resistance of motor No. 1 are increased, motor No. 2 remains active and so continues to be when shunted by the second step, as is the case with Brown.

There can be no question, then, that Potter has the identical three steps that Brown has, and that in the same order. He first strengthens the field and ohmic resistance of one motor, then shunts the other motor, and then places that motor with its field strength and ohmic resistance increased in parallel with the first motor; and, when he is dealing with that motor and shunts the other motor, the latter motor is active.

The only difference between him and Brown is that he increases the field strength and ohmic resistance of each motor in its order in a different way from Brown; but that way is the same as that used by appellee, so that appellant, to maintain infringement, is bound to concede that it is an equivalent way.

The ground upon which appellant claims that, notwithstanding this, Potter does not anticipate Brown, is that, in connection with this manipulation of the motor circuit as a whole and of the field circuits, Potter uses in the car circuit outside of the motor circuit rheostatic external resistance as additional protection to the motors whilst the motor circuit is being so changed and upon the completion of the change, and Brown does not. In the language of its counsel, Brown discovered "that it was possible to dispense with all external resistance in passing from series to multiple and to rely only upon the internal protection of the motor circuits."

This advance of Brown, it urges, was not obvious to one skilled in the art and possessed utility. That it was not obvious to such an one, it maintains, is made out by the fact that no one before Brown attained to it, and in support of this position the case of Star Brass Works v. General Electric Co., 111 Fed. 398, 49 C. C. A. 409, is cited.

That it possessed utility, it contends, is made out by the fact that appellee uses it, and in support of this position it cites the cases of Lamb Knit Goods Co. v. Lamb Glove & Mitten Co., 120 Fed. 267, 56 C. C. A. 547; Canda v. Michigan Malleable Iron Co., 124 Fed. 486, 493, 61 C. C. A. 194; Dunn Mfg. Co. v. Standard Computing Scale Co., 90 C. C. A. 331, 163 Fed. 521; Dubois v. Kirk, 158 U. S. 60, 15 Sup. Ct. 729, 39 L. Ed. 895.

But it does not rely solely on such evidence of utility. By its expert it has proven that the current wasted by the use of the rheostat in such a case represents 26⅔ horse power, and, in reply to appellee's suggestion that such waste is for only a second, it says that this is so hundreds, if not thousands, of times a day—as often as the motorman finds occasion to shift the motors from series to parallel.

We do not find it necessary to deal with each one of these several positions; but, in passing, we would say this as to the matter of the utility of the advance. In order to determine whether Brown, without rheostatic external resistance, but with the external resistance of the blow-out magnet coil, is more useful than Potter, with rheostatic external resistance, i. e., wastes less current during and upon the change of the motors from series to parallel, it has to be known which involves the use of the most ohmic resistance altogether, i. e., whether Brown's external resistance plus his internal resistance exceeds that of Potter plus his internal resistance, for, so far as the waste of current from ohmic resistance is concerned, it is immaterial whether it is external or internal; and it is possible that appellee's internal ohmic resistance is considerably less than that of Brown plus his external resistance, so that appellee's usage may not be a witness to the utility of Brown. The record may make a disclosure on this subject; but, if so, we have been unable to find it.

It is sufficient to say that we do not think appellant's response to the defense of anticipation is sufficient. The discovery of Brown relied on was a mere idea, and ideas are not the subject of a patent. As said by Judge Lurton in Goshen Sweeper Co. v. Bissell Carpet Sweeper Co., 72 Fed. 67, 75, 19 C. C. A. 13, 21:

"Patents cover the means employed to effect results. Neither an idea nor a function nor any other abstraction is patentable."

Nor did Brown attempt to secure a patent on that idea. What he patented was simply a process of changing a motor circuit from series to parallel to increase speed and at the same time changing the field circuits of the motors to prevent harm to the motors during the other change and upon the completion thereof. He patented a thing; that thing was a process or method; the process or method was these changes in the motor and field circuits in the manner called for in the claim; and the result which he secured was acceleration of speed and protection from harm. If this identical thing or its equivalent is found in Potter, the latter anticipates Brown, and Brown's patent is void. This thing is found in Potter identically as in Brown, except as to the changes in the field circuits, and here the changes are what we are authorized to assume are the equivalent of the changes in Brown. The fact that Potter, in connection with this thing, uses external resistance as an additional protection, and Brown omits it, does not affect to any extent the identity of the two things. Brown's thing is that of Potter. The fact that he omits what Potter uses in connection with it does not make his thing a different and a new thing. It is the same old thing accomplishing the same result in the same way that it does in Potter. This is not to be likened to the case of a combination formed out of less than all the elements of a larger combination securing the same result as that combination, in which case the lessor combination is a different thing from the larger and hence patentable. Here Potter's external procedure and internal procedure did not constitute a combination effecting a certain result. They were two separate things used in conjunction, or rather at the same time; each effecting a separate result. The internal procedure effected an increase in speed and protection from harm; whereas, the external procedure effected simply protection from harm. And, so far as protection from harm is concerned, the two did not combine to secure such protection. Each separately yielded such protection, and that not exactly in the same way, as the internal procedure yielded counter-electro-motive force, as well as ohmic resistance, whilst the external procedure yielded the latter alone.

Brown, himself, recognized that the external procedure and internal procedure were two separate and distinct things, and that their use together did not create a new thing in which the two lost their identity in a larger thing when he referred to the fact that external resistance might be used in connection with his invention where conditions made it "desirable and suitable." Had Brown preceded Potter, there would seem to be no question but that Potter would infringe upon Brown. If so, then it follows, according to the well-recognized principle, Potter anticipates Brown. On the ground therefore that Brown is anticipated by Potter, we feel constrained to hold that Brown is void.

It should be noted that it appears from the record that neither Wightman nor the Potter patent was cited to the examiner in the Patent Office and were overlooked by him. This circumstance affects the presumption in favor of the validity of the patent from its issuance.

Cleveland Foundry Co. v. Kauffman (C. C.) 126 Fed. 658; American Soda Fountain Co. v. Sample, 130 Fed. 145, 64 C. C. A. 497.

The decree of the lower court is affirmed.

(172 Fed. 393.)

NATIONAL DUMP CAR CO. v. RALSTON STEEL CAR CO.

(Circuit Court of Appeals, Sixth Circuit. August 2, 1909.)

No. 1,926.

1. PATENTS (§ 64*)—SCOPE—"PIONEER PATENTS."

A pioneer patent is one which first discloses means to accomplish a certain result, and the term does not apply to a patent for new means to accomplish a result already attained in another way, although they may be an improvement on the old way.

[Ed. Note.—For other cases, see Patents, Cent. Dig. § 79; Dec. Dig. § 64.*]

2. PATENTS (§ 328*)—VALIDITY AND INFRINGEMENT—DUMP CARS.

The Caswell reissue patent, No. 12,447 (original No. 806,394), for an improvement in cars, consisting of trapdoors in the bottom of the car which may be opened to dump its load, claims 31, 32, 44, 48, 58, 59, 60, 61, 62, and 63, which relate only to the doors, and means for operating them, disclose invention, but not of a primary character, and are not infringed by a device which does not contain the longitudinal shaft operated by means of cogged pinions and plates to open and close the doors, which is an essential feature of each claim, nor any equivalent therefor having substantially the same mode of operation.

[Ed. Note.—For other cases, see Patents, Dec. Dig. § 328.*]

Appeal from the Circuit Court of the United States for the Southern District of Ohio.

Thomas F. Sheridan and Robert H. Parkinson, for appellant.

H. A. Seymour, for appellee.

Before LURTON, SEVERENS, and WARRINGTON, Circuit Judges.

SEVERENS, Circuit Judge. The questions arising upon this record concern the validity, the scope, if the patent is valid, and the infringement of letters patent originally granted to William A. Caswell, assignor to the National Coal Dump Car Company, dated December 5, 1905, and reissued February 6, 1906. The number of the reissued patent is 12,447, and it professes to be for "a new and useful improvement in cars." "The invention relates," says the patentee, "to a class of freight cars having a level floor, provided with trapdoors adapted to be opened to dump their loads, when the latter consist of sand, gravel, coal or grain." And the patentee further states that the main feature of it "is the dispensing with the side sills heretofore used in all cars" of which he had any knowledge. He goes on to explain how the presence of such side sills obstructs the dumping out to the side of the track the contents of the car, and states in a general way that he arranges his trapdoors in a series along each side of the floor of the car hinged at their inner edges and provided with means for support-

ing and operating such doors, so that when opened they deflect the coal, etc., outside of the track. As is at once seen, this operation is facilitated by removing the heavy and bulky side sills of the only cars of which the inventor had any knowledge. Then he adds:

"All these and other features as well as the details of my construction are fully set forth below."

It now appearing that the patentee was mistaken in supposing that he was the first to dispense with side sills, and that his device for doing this and otherwise supporting the side of the car was probably anticipated, he now relies upon one of the "other features," namely, his apparatus for operating his dumping doors. The appeal is from a decree dismissing the bill upon a finding that there was no infringement.

Inasmuch as all the claims which are involved in the present controversy relate to the trapdoors and the means for operating them, we will pass by, with a brief description, that part of the scheme for taking out the side sills and supplying their function of strengthening the car and carrying the load by other means. He does this by putting four sills lengthwise along the middle of the car, a little distance apart, and building a floor thereon through the whole length of the car. To the outside of this floor, and apparently upon the outer edge of his outer sills, he hinges his doors. To atone for the lack of side sills, he strengthens the sides of the car by using heavier planking, using diagonal iron braces and suspending stout iron straps from the top of the side of the car to the bottom of the car and there turning them inward to help in supporting the load. He also uses for the same purpose "headers" extending from the bottom of the car frame upward and outward to the sides of the car. In each of these headers he makes a long slot to accommodate the devices for operating his dumping doors, a feature to be explained when we come to consider the "other features" with which we are now more particularly concerned.

There are 63 claims in the patent, 10 of which are said to be infringed. All of these 10 relate to his means for operating the dumping doors. The principal member of his apparatus consists of a long straight movable shaft of iron (or steel) extending from end to end on each side of the car. A crank-handle is located at the end of the car, and this is connected by intervening gear with the end of the long shaft, whereby the shaft is made to revolve. The shaft is carried through the long slots in the headers above mentioned. On the shaft and inside each header a cogged pinion is fastened, and on the bottom of each slot a plate is secured having cogs to mesh with the cogged pinion on the shaft. Thus, when the shaft is revolved, the cogged gear above described carries the shaft through the slots in the headers upward and outward or downward and inward. There are flanges on the sides of the cogged pinions which prevent the shaft from longitudinal movement. Partly to prevent the load bearing injuriously upon this gear for effecting movement of the shaft, loose rollers are set upon the shaft extending above the headers and supporting the doors. A horizontal rest is provided at the side of the car, so that

when the shaft is revolved out to the side, the door rests upon the rollers without any impulse to swing downward. As before stated, the inner end of the door is hinged to the side of the stationary floor, or to the timber under the floor, and the door extends out to the side of the car.

With this explanation it is perceived that the operation is this: Assuming that the car is loaded and the dumping doors are closed up and resting on the rollers at the outer end, the crank-handle at the end of the car is turned in the proper direction, the long shaft and the fixed cogged pinions revolve on the cogged plates under them, and together with the loose rolling pinions on the shaft, which support the doors, all descend down through the long slots in the headers.

The outer end of the door follows this downward and inward movement of the shaft and rollers until the load on the door slides, or rolls, off outside of the track. It should be added that, to prevent the door from swinging down too far, a stop is fixed behind it. To close up the doors, the crank-handle is turned the other way, the long shaft rolls upward and outward through the slots in the headers, and, carrying along the loose pinions, lifts up the ends of the doors to their original position. It must be confessed that there is a good deal of ingenuity in this organization, and, if it is practically useful, we should think it to be, without doubt, a patentable invention. We attach this proviso because there is some evidence in the record which raises a doubt whether from the complexity of the apparatus and the rough usage it must encounter it would not be so far liable to derangement and breakage as to destroy its utility; but we resolve that doubt, as we think we should, in favor of the patent, and we are quite prepared to believe with counsel for appellant when they say that prior to the invention of Mr. Caswell there was not a single freight car in use in the United States, or elsewhere, equipped with door-opening mechanism of this kind. We find nothing in the record which leads us to doubt it.

The claims involved are these:

"31. The car having a longitudinal series of dump doors along its sides, headers or cross-frame members between adjacent doors, and a shaft extending through and sustained by said headers and supporting the doors, substantially as specified.

"32. The car having a longitudinal series of dump doors along its sides, headers or cross-frame members between adjacent doors, and a shaft extending through and sustained by said headers and supporting the doors; said shaft being also supported at its outer end from the end sill, substantially as specified."

"44. In a car of the class described, the combination of a supporting-frame portion, a drop-bottom portion therefor formed of a plurality of swinging sections pivotally secured together at each side of a longitudinal center of the car, a reciprocating bar extending longitudinally of the car, and movable transversely thereof in engagement with each swinging section, and means for reciprocating said bar to open and close the swinging sections, substantially as described."

"48. In a car of the class described, the combination of a supporting bottom frame, a drop-floor section hinged to a longitudinal member of the frame, means supporting said section and contacting with its under surface and movable toward and from said longitudinal frame member in opening and closing said section, said means being sustained in the cross-framing of the bottom, and means for operating said supporting means."

"58. In a car, the combination of a car frame having longitudinal sill mechanism, end sills and transverse beams between such end sills, a dumping door secured to the car frame movable to open and closed positions, and dumping door supporting mechanism supported by such transverse beams; said supporting mechanism being movable longitudinally of the door.

"59. In a car, the combination of a car frame having longitudinal sill mechanism and transverse beams mounted between the ends of the car frame, dumping doors secured to such car frame movable to open and closed positions, and door-operating mechanism mounted in such transverse beams and connected with the dumping doors; said supporting mechanism being movable longitudinally of the door.

"60. In a car, the combination of a car frame having transverse beams, dumping doors secured to such car frame movable to open and closed positions, and door-supporting and operating-shaft mechanism beneath the dumping doors and supported by the transverse beams; said supporting mechanism being movable longitudinally of the door.

"61. In a car, the combination of a car frame having transverse beams mounted between the ends of the car, dumping doors secured to the car frame movable to open and closed positions, shaft mechanism mounted in such transverse beams beneath the dumping doors and operatively connected therewith for opening and closing the doors and supporting them in closed position, and means for operating such shaft mechanism; said shaft mechanism being movable longitudinally of the door.

"62. In a car, the combination of a car frame having longitudinal sill mechanism, end sills and transverse beams secured to such longitudinal sills and extending transversely of the car, dumping doors mounted in the car frame on opposite sides of its longitudinal center movable to open and closed positions and having their inner edges hinged to the car frame, forming flat-bottom portions for the car when in closed position, and door operating and supporting shafts mounted in the transverse beams beneath the dumping doors and operatively connected therewith; said shafts being movable longitudinally of the door.

"63. In a car, the combination of a car frame having transverse beams between the ends thereof, dumping doors secured to such car frame movable to open and closed positions, and shafts extending longitudinally of the car supported by such transverse members of the car frame and in operative engagement with the swinging sides of the dumping doors outside their longitudinal centers for supporting them."

The next question is: What is the character of this patent? What does it stand for? Before answering this question, we must find out how far the art of constructing apparatus for operating dumping boards in vehicles and other things kindred to railroad cars, or so near to them as to suggest to the mind of an experienced mechanic the adoption of such devices in railway cars, had been advanced. It is well and clearly shown by the opinion of Judge Sater, in the court below, that there was nothing new in the result effected by the operation of the patentee's devices for dumping doors, and by this we mean the general result of dumping the contents of a car, and not the particular mechanical result or results effected by the co-operation of some of the parts of the combination. There can be no question, and, as counsel put their case to us, it is not disputed, that the prior art showed cars with dumping doors forming part of their structure adapted to dump their loads downward through the floor and between tracks, and others adapted to open out and deflect the contents to one or both sides of the track, and some constructions showed longitudinal series of doors, operated simultaneously by means of a single crank or lever.

The only point made is that none of the previous constructions of means for effecting the dumping was the same as, or similar to, Caswell's. It is significant that counsel for the appellant should claim that this invention was a pioneer, and therefore included all means having functions adapted to effect the like result. A comparison with the means employed by the defendants for operating the dumping doors shows that this contention of the appellant in respect to the rank and scope of its patented invention is necessary to its case. If Caswell had been the first to devise a way, and the means of making it effective, for opening and closing the dumping doors on cars or other kindred things containing articles in bulk, it might be that his invention would be entitled to the rank and scope which he claims for it; but we have said enough to show that in his case such was not the fact. Counsel repeat with much emphasis that he was the first to invent the means described in his patent, and this is admitted; but this priority is only such as must be shown in every case to constitute a patentable invention. In this sense and to this extent every patentable invention is a pioneer; but it is obvious this is not the meaning of that title as used in judicial decisions defining the law upon this subject.

The case of Morley Machine Co. v. Lancaster, 129 U. S. 263, 9 Sup. Ct. 299, 32 L. Ed. 715, is the one to which constant reference is made for the definition of a "pioneer invention," and it is in itself probably the best illustration we have of facts which exhibit a pioneer or primary invention. It showed the invention of a machine containing the means for automatically—that is, by the simple application of power—separating, one by one, buttons having shanks and eyes, from a mass, turning the buttons so that they should present their eyes to the necessary uniform position, carrying them to the fabric, and there, at uniform prescribed distances apart, sewing them upon the fabric. It was an invention of the highest order. The instrumentalities employed and their mode of operation seemed almost to indicate intelligence in the machine; but what is most to the point is that Mr. Justice Blatchford was at pains to show that Morley was the first to devise means to accomplish such a result. This was what constituted the invention a pioneer and distinguished it from that class of inventions which only provide a new way of accomplishing a result which had theretofore been attained by others by other instrumentalities and in a different way. In other words, the learned justice showed that the thing done, the work performed, had never been accomplished by any machine known to the earlier art. We have referred to that case for the purpose of aiding in defining what is meant by a "pioneer invention," or to that class of inventions in which the novelty consists in the provision of means for the production of an entirely new result, one never before attained; but it is worth while to proceed with the case cited to show what effect was given to the determination of the court in regard to the character of the invention. To all such inventions, the court said, it was the policy of the law to award a corresponding compensation. The public were acquiring something altogether new, and not merely a substitute for what it already had; although the substitute might be better than the original, and to that extent might be entitled to reward.

In carrying out this policy the courts have given a liberal scope to the invention, one corresponding with its novelty, and have held that it covered not merely the very means employed, but all others which perform the same office in substantially the same way as that of the patent. In this statement of the rule the stress lies in the word "substantially." It is intended to cover all mere variations of forms, which nevertheless do the same work, perform the same "office" (to use a very suggestive word), as is accomplished by the patented device. If, indeed, the same office is not performed by the instrumentalities of an alleged infringement, if, to repeat, they do not do the same work, there is no infringement; but it is certain that the rule just stated does not apply to the case of a patent for an improvement upon an existing machine, nor to one which provides a new way to accomplish a result already attained in another way. The rule as to these latter cases is that such patents do not cover other devices which, although they perform the same work and accomplish the same result, yet do it by a different mode of operation.

Walker, in his works on Patents, states the law correctly when he says, in section 352:

> "But the test of function is only the first of several tests of equivalency. The fact that one thing performs the same function as another, though necessary, is not sufficient to make it an equivalent thereof."

And further, in section 353, he adds:

> "Function must be performed in substantially the same way by an alleged equivalent as by the thing of which it is alleged to be an equivalent, in order to constitute it such."

And he cites authorities of the highest character, which fully sustain these statements. This last requirement is the one which, in the case of a primary patent, is not insisted upon; but in the case before us the rule just stated, without the qualification, applies.

With these observations we turn to the examination of those parts of the defendant's apparatus for operating the dumping doors which are involved in the charge that these 10 claims of the complainant are infringed. The defendant's devices are those set forth in patents granted to one Becker later than that of the complainant's, and they have the benefit of the presumption arising from their grant that they do not infringe. Passing from this to their actual construction, we find that they dispense with heavy side sills for the car. This they were authorized to do by earlier forms of construction. They build one strong central sill lengthwise through the middle of the car. Above this they raise a narrow member, to which, on each side, the doors are hinged. The doors fill the whole bottom of the car, and there is therefore no floor between them, as in Caswell's patent. Thus they dump the whole contents of the car. The outer ends of the doors abut upon small side sills, which can be made small because they are made of metal. Narrow I-crossbeams, supported at the center of the main sill, extend across the car from side to side. There is no movable long shaft which travels in the headers and carries the pinions rolling up and down under the doors, and, as there is no such shaft

to be moved, there is no cogged pinion meshing with a cogged base to move the long shaft out and in, as in Caswell's patent. Instead of all this mechanism of the Caswell patent, a long stationary crank-shaft is suspended in brackets hanging down from the cross-sills. This long shaft, if we call it such, is made up of a series of double cranks, thus:

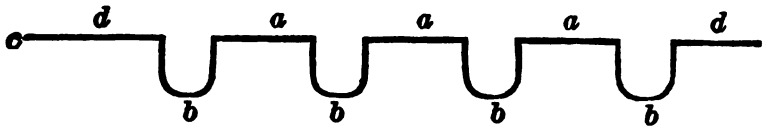

Supposing the shaft above mentioned to be journaled in the brackets at *a a*, rolling pinions on which the doors rest are journaled on the other loops of the shaft at *b b b*. The operation effected by this combination is this: By means of a crank-handle at *c*, the crank-shaft *d d* is turned over until the pinions on *b b b* contact with the doors. By continuing this movement the doors are raised to place, and this is made to happen when the section *b b b*, and, of course, the pinions on them, are directly over the sections of the shaft *a a*. Thus the load on the doors rests in counterpoise on the sections *b b b*. Then the doors are closed and the position is secured. All that is necessary to dump the load is to turn back the shaft off the counterpoise, or dead center, as a mechanic would call it, when the doors and their load drop by gravity and the load is discharged. There are no means for dropping the doors gradually, or of arresting the fall at any stage of their progress, as in Caswell's arrangement. The sections *b b b* fall over and down about half a circle, and then, after brief oscillation, hang suspended under the sections *a a*. This form of shaft, having loops to contact with the doors to open and close them, was not new with Becker, but was taken from the old art, older than the date of Caswell's invention.

It is, we should think, idle to say that this is the same as, or anything at all similar to, the operation of Caswell's device, and since the movable long shaft of that patent is an element in each of the claims involved, and neither it nor its mode of operation is found in the alleged infringing structure, we need not go into a comparison of other elements in the combinations of these claims, as the learned judge in the court below thought fit to do in his very satisfactory opinion. The gist of the whole of this part of the invention disappears when the movable main shaft is taken out; but it may in truth be said that there is scarcely any resemblance between the particular means employed in Caswell's patent for operating the dumping door and those employed by the defendant for the same purpose.

The judgment of the court below will be affirmed, with costs.

NOTE.—The following is the opinion of Sater, District Judge, in the court below:

SATER, District Judge. The complainant, as owner of reissued letters patent No. 12,447, issued to it as assignee of William A. Caswell, February 6, 1906, in lieu of surrendered and canceled letters patent No. 806,394, applied for December 20, 1902, and granted December 5, 1905, charges the defendants with infringement of the thirty-first, thirty-second, forty-fourth, forty-eighth,

fifty-eighth, fifty-ninth, sixtieth, sixty-first, sixty-second, and sixty-third claims set forth in such reissued letters. The bill also alleges that the defendants Ralston and Becker, while acting as official, confidential, and trusted employés of the Caswell Car Company, the complainant's predecessor, owner of the invention and application for letters patent forming the basis of such reissue, conspired and confederated to appropriate the Caswell invention and improvement for the purpose of forming the defendant company, in whose service they are now as officials and employés engaged in designing, manufacturing, and selling combined freight and dump cars, in violation of the complainant's rights. The connection of Ralston and Becker with the defendant company as officials and employés is admitted; but the defendants each deny the other charges made against them, and assert that the complainant's letters patent are wanting in invention and novelty, and that the cars made and sold by them are the sole inventions of the defendant Becker, and are covered by letters patent Nos. 762,118, 736,471, 763,947, and 768,722, all of which are owned by the defendant company. They further allege that the complainant is estopped to deny their right to use, manufacture, and sell cars made in accordance with the Becker patents.

Various types of dump cars were well known, and several kinds of cars with swinging doors, capable of being opened and closed by mechanical means, had been invented prior to the filing of any application for letters patent by either Caswell or Becker. In his reissued letters patent Caswell recognizes this fact in the statement: "This invention relates to that class of freight cars having a level floor adapted to the carrying of any class of freight and provided with trap doors adapted to be opened to dump the loads when they consist of sand, gravel, coal, or grain; the car being also adapted to be unloaded by shovel. A type of such cars is shown in my patent, No. 619,670." He knew that others had preceded him in the field of dump car invention, that the prior art had so far progressed as to admit of a classification of such cars, and that what he claims as his invention was typical or representative of a given class. That Becker is also chargeable with similar knowledge is manifest from apt statements embodied in his several applications for letters patent.

If we seek the uppermost thought in Caswell's mind, we find it as an initial statement in the third paragraph of his specifications, as follows: "The main feature of the present invention is to dispense with the side sills heretofore used in all cars of which I have any knowledge. The omitting of the side sills enables me to obtain an opening along the sides of the car floor and outside the track sufficiently large to permit the discharge of large lumps of coal without hindrance, so that all the coal can be dumped outside of the track into a chute or onto a sizing grate, and where, even if it is not immediately removed, it will not interfere with the movement of the car. This feature is of great importance, especially in coal cars. The trap doors employed are arranged in two series, one along each side of the car, and are hinged at their inner edges, and are provided with novel means for supporting and operating them, and when opened they deflect the coal beyond the track, so that the latter remains unobstructed. All these and other features, as well as the details of my construction, are fully set forth below and also illustrated in the accompanying drawings." Again he says: "The intermediate sills are at some distance from the side of the car, and, as the ordinary side sill is dispensed with, it will be seen that opportunity is thereby gained between the intermediate sills and the sides of the car for the wide doorways needed for large coal." Caswell was not, however, the first to dispense with the side sills in devices designed for transporting loads, as appears from the patents of Clark, No. 69,075, September 24, 1867, Koplin, No. 470,299, March 8, 1892, Lyon, No. 101,030, March 22, 1870 and Bellows, No. 644,890, issued March 6, 1900; nor was he the first to conceive such a device with swinging doors hinged at their inner ends and dumping its load outwardly beyond its wheels, as will appear from an examination of the patents last named.

Caswell, to regain the strength and in part the supporting power lost by dispensing with side sills, provided for such a construction of his car sides as to give them increased strength and enable them to bear a material part of the load. His method of so doing he details as follows: "The walls of the superstructure or box of the car are greatly strengthened over previous con-

structions so, that they are adapted to assist materially in supporting the weight of the load. The walls consist of heavy plank, 44 (though sheet steel may be used in place of the plank), and they are braced by diagonal braces, 42, and bolted to the wall plank by bolts, 43. These braces are not merely tying devices, but, on the contrary, are made large enough so that, in addition to that function, they also serve efficiently in stiffening the walls and enabling them to resist the tendency to sag under the load. They project into the car, and consequently the load will lodge upon and be supported by them to a very considerable extent, and to the extent that the load does thus lodge upon them the doors are relieved. They are stayed at their upper ends by the bent-over web, 45, of the angle irons, 46, forming the stakes of the superstructure (see Fig. 26), and at the bottom they rest upon or are attached to the cross members of the car frame, which are more particularly described below. Each brace extends from a stake to the adjacent cross member, much as in bridge and other truss work. I aim by this feature to increase rather than diminish the tendency of the load to arch or dome, because the weight upon the doors is thereby reduced and they are consequently more easily opened." The construction whereby a part of the load is carried by the sides of the car was anticipated by the Bellows patent, No. 644,890, the specifications of which recite that, in a car constructed in accordance therewith, "the sides of the car constitute plate girders which carry their proportion of the material or load in the car, replacing the ordinary side sills for this purpose. This plate girder construction of the sides does away with these heavy side sills below the floor level of the car, and thus not only reduces the weight of the car, but allows easy access to the part supported below its bottom. This is an important feature of my invention, and I intend to cover the same broadly irrespective of the particular construction of the car."

As the Caswell doors constitute a considerable portion of the floor area, to support them when closed, as a further substitute in part for the strength lost by reducing the number of sills, he utilizes the adjacent members of the cross frame instead of longitudinal sills; i. e., side sills, for they are the only sills with whose use he dispensed. On this point he says: "The doors form a large part of the floor area, and its outer side portions and cross frame members are placed between each pair of them, so that they may be supported in their closed positions from the adjacent members of the cross frame, instead of the longitudinal sills, as is the customary construction." The last four quotations from his specifications indicate that the bodily movable shaft, 106, is a part of the "novel means for supporting and opening" the doors. He was manifestly ignorant of the fact that others had dispensed with side sills. His primary purpose was to accomplish that result (for he says, "This feature is of great importance"), and not to provide a movable acting sill in lieu of side sills. With him, as with all previous inventors who discarded side doors, provision for operating and supporting them with whatever load they might bear, became necessary. The means provided by him operates and supports them with whatever load they have, in whatever position they may be found within the limits of their movement.

At the time Caswell and Becker applied for their respective patents here involved, they had been preceded by inventors who had devised wagons or cars having the inner ends of their dump doors hinged at each side of the longitudinal center to sills parallel with the central sill, or to a central sill, or at a point at the longitudinal center, or having a longitudinal series of dump doors along their sides with headers or cross-beams between them. Koplin's patent No. 470,299, March 8, 1892, discloses a longitudinal series of simultaneously opening doors. The dump doors in some instances dropped their load beneath the car or wagon, in others to the side. In some instances the devices dump their entire load, or practically so, as seen in the patents of Clark, Koplin, the Ingoldsby patents, Wittig, No. 590,637, Marnell, No. 342,526, Campbell and Rankin, No. 484,491, and Lewis, No. 495,096. In other instances the dump doors drop but a portion of the load, as seen in the patents of Cox, No. 476,366, Wormelsdorff, No. 489,111, Campbell and Carlton, No. 598,136, Williamson and Pries, No. 610,218, Bellows, No. 644,890, and Caswell, Nos. 645,587, 657,012, and 619,670. The prior art discloses a variety of mechanisms for the opening or the opening and closing of dump doors. Counsel have not agreed

fully in their classification of such mechanisms nor is it necessary that a full and correct classification be made. Types of door mechanism employing the rock shaft are Bellows, No. 644,890, and Koplin; a hook or latch, Clark, and the British patent of Fox, No. 11,017; a chain and windlass, Souder, No. 676,-101, Campbell and Carlton, No. 598,136, Lyons, No. 101,030; a crank shaft, Campbell and Rankin, Wittig, Koplin, the British patent of Kirkconel and Noble, No. 8,709, Dederick, No. 109,188, Marnell, No. 342,526, Goodwin No. 403,584, and Kelly and Murphy, No. 689,197; a reciprocating bar and shaft, Muller, No. 707,342. We are concerned in this case with only the latter two types.

To what extent, if any, Caswell and Becker were respectively indebted to the prior art, must appear from an examination of their devices. The complainant affirms that Caswell's is a pioneer patent. This the defendants deny, and assert that the claims alleged to be infringed are restricted to the particular arrangement and construction of car supporting frame, dump doors, and dump-door actuating mechanism disclosed by his letters patent, and that the Becker invention and the Ralston car are not only substantially different from Caswell's, but possessed of conspicuously distinguishing features. The applications for their respective patents were pending at the same time. Section 4904, Rev. St. (U. S. Comp. St. 1901, p. 3389), imposed on the Commissioner of Patents the duty of declaring Becker's application an interference with that of Caswell, if in his opinion it was such, and, after a hearing by the examiner as to the question of priority of invention, to issue a patent to the party adjudged to be the prior inventor; the defeated party having, however, the privilege of appealing from the decision of such examiner. As interference proceedings regarding the applications were not declared or suggested, and as officials are presumed to perform their duties, it necessarily follows that in the judgment of the Patent Office officials there were features that distinguished one invention from the other, and that there was therefore no occasion for interference proceedings. Mr. Justice Shiras, in Boyd v. Jaynesville Hay Tool Company, 158 U. S. 260, 15 Sup. Ct. 837, 39 L. Ed. 973, in speaking of a like situation, said: "As both applications were pending in the Patent Office at the same time, and as the respective letters were granted, it is obvious that it must have been the judgment of the officials that there was no occasion for an interference, and that there were features which distinguished one invention from the other. In Pavement Company v. City of Elizabeth, 4 Fish. Pat. Cas. 189, Fed. Cas. No. 312, Mr. Justice Strong said: 'The grant of the letters patent was virtually a decision of the Patent Office that there is a substantial difference between the inventions. It raises the presumption that, according, to the claims of the latter patentees, this invention is not an infringement of the earlier patent.' It would also seem to be evident that, as the purpose of the invention was the same, and as the principal parts of the respective machines described were substantially similar, it was also the judgment of the office that the distinguishing features were to be found in some of the small and perhaps less important devices described and claimed. Burns v. Meyer, 100 U. S. 671, 25 L. Ed. 738."

The complainants invoke the doctrine of equivalents. Under the rule announced in McCormick v. Talcott, 20 How. 402, 15 L. Ed. 930, if Caswell's invention is original, he has the right to treat the defendants as infringers if they make a car "operating on the same principle, and performing the same functions by analogous means or equivalent combinations, even though the infringing machine may be an improvement of the original, and patentable as such. But if the invention claimed be itself but an improvement on a known machine, by a mere change of form or combination of parts, the patentee cannot treat another as an infringer who has improved the original machine by the use of a different form or combination performing the same functions. The inventor of the first improvement could not invoke the doctrine of equivalents to suppress all other inprovements which are not mere colorable invasions of the first." Another statement of the rule is found in Chicago & N. W. R. Co. v. Sayles, 97 U. S. 554, 24 L. Ed. 1053. Mr. Justice Bradley said: "Like almost all other inventions, that of double brakes came in when in the progress of mechanical improvement it was needed; and, being sought by many minds, it is not wonderful that it was developed in different and independent forms,

all original, and yet all bearing a somewhat general resemblance to each other. In such cases, if one inventor precedes all the rest, and strikes out something which includes and underlies all that they produce, he acquires a monopoly, and subjects them to tribute. But if the advance towards the things desired is gradual, and proceeds step by step, so that no one can claim the complete whole, then each is entitled only to the specific form of device which he produces, and every other inventor is entitled to his own specific form, so long as it differs from those of his competitors, and does not include theirs. These general principles are so obvious that they need no argument or illustration to support them." The complainant's and defendants' respective devices must be tested by the rule above announced.

The Caswell device belongs to the flat floor type of dump cars, which doors dump only a part of the load. A reason for this is found in Prof. King's uncontradicted statement that in 1903 "Mr. Caswell stated that a car could not be made to dump its whole load, as such a car would not be strong enough to stand up under the required service." Caswell devised a car with a central, level, immovable, longitudinal section of floor, from three to four feet wide, in immediate contact with and affixed to two central longitudinal sills and two intermediate parallel sills placed under the outer edges of the immovable floor structure. The Wormelsdorff dumping car has a quite similar sill arrangement, but not an overlying fixed level floor section. A floor section of that character, however, is disclosed in the devices of Williamson and Pries, Bellows, No. 644,890, and Caswell, Nos. 645,587 and 657,012. Consequent upon this method of floor construction, the dump doors are literally arranged along the sides and do not extend to the longitudinal center of the car, but only to the intermediate sills, and bear a correspondingly less portion of the load. He provides a series of plurality of swinging sections or doors arranged along the sides of the car, but so did Koplin. The inner ends of his doors are attached or hinged to the floor of the car or a longitudinal member of the frame, at each side of the longitudinal center of the car, and on opposite sides of such center, and no other means are provided or contemplated for hinging such inner ends. In view of his sill construction, to extend his doors to and hinge them at the actual longitudinal center would render them inoperative, because they could not then dump their loads. His placing them on opposite sides of and some distance from the center is consistent with a construction which insures a car which dumps only a part of its load, and with his belief that such construction is necessary to impart the requisite strength to a dump car.

Becker's device belongs to the flat floor type of cars whose doors dump the whole or practically the whole of the load. The same result is accomplished by the devices of Koplin, Souder, Marnell, and Wittig. To accomplish this result, and dump the load outside of the rail, it is necessary to dispense with all longitudinal floor sills between the center and outer edge of the car. The Ralston car, however, retains the outer sills; but they are placed above the floor. It has no longitudinal central floors. A central longitudinal sill or box girder, as in the Bellows patent, No. 644,890, is employed, which, that the car may dump its entire load, does not contact with, but is located below, the car floor a distance equal to the width of the cross-beams (I-beams) or headers which it supports on its upper surface. The dump doors extend inwardly to the center of the car and carry the entire load, excepting such as may rest on the cross-beams, and are secured or hinged, not as are complainant's at each side of the longitudinal center of the car, or to a longitudinal member of the car frame, or to the car frame, as variously expressed in complainant's claims, but at the longitudinal center of the car to rods located above the central sills. The Ralston car does not, therefore, infringe that element of the combination found in the forty-fourth, forty-eighth, fifty-eighth, sixtieth, sixty-first, sixty-second, and sixty-third claims, which specifies the manner and place of hinging the inner end of the dump doors of complainant's car.

The cross-beams, 75, of the Caswell device, do not span the car, but reach only to the central sill, to which they are attached. Above each beam is a centrally webbed metal frame, bolted at its ends and sides to adjacent parts of the mechanism. The headers of the Ralston car are I-beams, which rest on top of the single central sill and extend entirely across the car. The Caswell cross-beams are deeper than those of the Ralston car. This is attributa-

ble to the elongated perforations or openings in the Caswell cross-beams, whereby they are so weakened that it became necessary to strengthen them by building them up from below. As a means of supporting and operating the dump doors, the cross-frames are provided with elongated openings, 113, inclined downwardly towards the central line of the car, which openings are flanged to give added strength and to support racks, 112, secured in the openings' bottoms. Four bodily movable shafts, 106, each extending half the length of the car and carrying rollers for half of the doors on either side of the car, extended through the elongated openings. These shafts at each end and between each pair of doors are provided with rimmed gears, which gears are fast on the shaft. At the outer end of the elongated openings in the cross-frames is a short horizontal portion on which the shaft rests when the doors are closed. On the shaft beneath each door are two anti-friction door-supporting rollers, 105, which contact with metallic bearing plates in the bottom of each door. When a rotary movement is imparted to the shaft which extends through the elongated openings, the shaft moves bodily through such openings; the gears which are fast on it meshing with their corresponding rack, 112. The rotation of the shaft in one direction causes it to traverse the openings downwardly and inwardly, that the doors may open; the rotation of it in the other direction causes the shaft to move upwardly and outwardly, closing the doors. The doors of the Caswell car opened gradually. They may also, when desired, as in ballasting, be opened but partially and held in such position. The use of rack and gear for opening and closing dump doors is shown in the Ingoldsby patent, No. 613,279, November 1, 1898; the gears being attached to the bottoms of the doors and being operated by pinions supported on a shaft in brackets below.

The Caswell door-opening and door-closing shaft, like that of Muller, is of the reciprocating type. The Muller patent shows under each door a straight rigid reciprocating bar, 15, movable bodily lengthwise of the door, and carrying anti-friction rollers, 14, contacting with the inclined faces, 15, of brackets, 12, secured to the under side of each door near its side edges. The reciprocating bars support the doors when closed, as in the Caswell patent. By rocking the shaft, 22, each reciprocating bar is moved lengthwise of the door, and the door is swung open by its own weight and that of the load. The movement of the reciprocating bar, as the doors open, is aided by the inclined faces, 13. In the Caswell device, the movement of the reciprocating bar, 106, as the door opens is aided by the inclination of the elongated slots, 113, in which it travels. In the Muller patent the incline is on the door; in the Caswell, in the supporting transverse beam; but functionally the mechanisms are equivalent. When the shaft, 22, of the Muller patent, is reversed to close the doors, the reciprocating bars move bodily in the opposite direction, acting on the inclined portion of the doors, and forcing them closed, and supporting them in that position. Muller made his bar reciprocate bodily longitudinally of the car; Caswell made his reciprocate bodily to and from the central line of his car by slotting his transverse beams so that the bar may be brought near to the doors and thus using one bar for a series of doors. In the Muller device the doors are all operated simultaneously along either side of the car bottom, and he expressly specifies that: "The rollers may be mounted on horizontal slides instead of on the links as shown. The doors may extend entirely across the bottom, instead of between the center and side sills, as shown, and may be used on a gondola or other type of car, and the parts may be otherwise varied in construction and arrangement within the scope of my invention." The arrangement and construction of the devices are different; but the principle embodied in the one is found in the other. In the Bellows patent, No. 644,890, it is also specified that "the door-actuating shaft may extend longitudinally of the car," and that, without departing from his invention, other changes may be made in his car, the doors and their actuating mechanism.

In his letters patent Caswell specifically provides that the reciprocating door-opening and door-closing shaft shall operate *in* and *extend through* the elongated openings in the cross-beams. After describing the construction of his cross-frame members, especially with reference to the rimmed gears, the racks and the elongated openings, he says: "With this construction it will be seen that any rotary movement given to the shaft, 106, will cause it to move

bodily *through* the openings, 113, by reason of the engagement of the gears 109, 110, and 111, with their respective racks." Again he specifies: "For operating the shaft so that it will move bodily down or up *in* the openings, 113, any suitable mechanism may be employed," etc. Another part of his specifications recites: "By providing all of them (cross-frame members) with the webbed castings at their ends, I am enabled to form *in* them the inclined ways, through which the door-supporting shafts move, and at the same time to give those shafts support *in* each member, and thus prevent any deflection of the shafts by the load upon the door." This feature of construction enters into and is made an essential in each of the following claims, as quoted: In his thirty-first and thirty-second, "a shaft extending *through* and sustained by said headers and supporting the headers;" in the twenty-eighth, "means supporting said section and contacting with its under surface and movable towards and from said longitudinal frame member in opening and closing said section, said means being sustained *in* the cross-frame of the bottom;" in his fifty-ninth, "door-operating mechanism mounted *in* such transverse beams and connected with the dumping doors," etc.; in his sixty-first, "shaft mechanism mounted in such transverse beams beneath the dumping doors and operatively connected therewith for opening and closing the doors and supporting them in their closed position;" in his sixty-second, "door-operating and supporting shafts mounted in the transverse beams beneath the dumping doors," etc. The italicizing of the words "in" and "through" is mine. The omission of these words from the other claims in question indicates that they were not used accidentally, but discriminatingly, to express an important feature of construction and operating, and Caswell became bound by whatever limitation such words impose. Menze v. Schmidt (C. C.) 154 Fed. 845. A substantial reason existed for mounting his door-opening and door-closing reciprocating shaft in and extending it through the elongated openings. This was necessary to bring it close to the under side of the doors to support them in all their intermediate positions.

The door mechanism of the Ralston car is of the crank shaft type. The car has two series of dumping doors, each of which is operated by a single crank shaft having a series of crank arms on which are journaled friction rollers engaging the lower surface of the door. Each crank shaft is journaled in a bracket bearing attached to the under side of the cross-beam and projecting below the same sufficiently, and necessarily distant from the doors, to permit of the vertical oscillation of the crank arm. In the Bellows patent is found a rock shaft journaled in a depending bracket, extending, it is true, from the sides of the car; but his specifications permit of a different arrangement of this device. A hand lever on the outer end of the Ralston crank shaft is used for operating it. The load is dumped by a rather slight rotation of the crank shaft, as in the Bellows device, causing its crank arms to move beyond their dead center, as in the Dederick device, and away from, instead of towards, the center of the car, when they drop by weight of the load, and discharge their contents. The doors, when fully opened, are supported by the crank arms; but in the Caswell patent by a rod, 138. The doors are closed, as in the Bellows device, in which the shaft may be longitudinally arranged and thereby open all the doors on one side of the car simultaneously, by partly rotating the crank shaft, thereby causing the shaft arms to swing outwardly and upwardly in the arc of a circle and lift the doors. When the doors are in their closed position they are supported by the crank shaft; the crank arms having been moved inwardly, in raising, slightly past their vertical positions or dead centers, against stops in the under side of the door. Each of the Caswell shafts rotates completely in opening and closing the door. In the Ralston car, each crank shaft rotates through a little more than 180 degrees only; its rotary motion being limited, much like that in the Wittig patent. It cannot reciprocate, because it is held in fixed bearings. The doors cannot be opened gradually or held in a partially open position, but swing, when their dropping movement commences, to their fully opened position. If complainant's patent is closely approached by the prior art, it is not infringed by an actuating device which permits the doors to fall suddenly, instead of gradually. Gould v. Spicers (C. C.) 20 Fed. 317. The transverse beams of the Ralston car are imperforate, and the shaft is not mounted in, and does not extend through, the

transverse beams of the car frame, and therefore there is lacking in the Caswell car construction that element of a combination hereinbefore set forth in the thirty-first, thirty-second, forty-eighth, fifty-ninth, sixty-first, and sixty-second claims of the Caswell patent, which provides for mounting a shaft in and extending it through the elongated openings of the cross-beams, and for this reason the car does not infringe any one of those claims. The perforations of his cross-beams is an essential element of such claims. Ball & Socket Fastener Co. v. Kraetzer, 150 U. S. 111, 14 Sup. Ct. 48, 37 L. Ed. 1019. The elongated slots are not only made an element of those claims, but the specifications show them to be necessary in the construction of Caswell's device; and he cannot assert that it is not material and that the means employed in the Ralston car of supporting the door-actuating shaft is an equivalent and covered by his claims. Wells v. Curtis, 66 Fed. 318, 13 C. C. A. 494. Moreover, the use of brackets for supporting such shafts antedated all of the patents here involved.

The crank shaft in the Ralston car has a vertical, but not a reciprocating, movement, and therefore does not infringe the forty-fourth and twenty-eighth claims of the Caswell device; one of the elements in the forty-fourth combination claimed being "a reciprocating bar extending longitudinally of the car, and movable transversely thereof in engagement with each swinging section," and in the forty-eighth claim "means supporting said section and contacting with its under surface and movable towards and from said longitudinal frame member in opening and closing said section." The crank shaft or door supporting mechanism in the Ralston car is not movable longitudinally of the dump door ,and does not, therefore, infringe the fifty-eighth, fifty-ninth, sixtieth, sixty-first, and sixty-second claims, in each of which such longitudinal movement is made a feature. The longitudinal shaft reciprocates bodily as an entirety. It is straight and rigid, and necessarily so, to perform the function assigned it in Caswell's construction. Whether or not a straight, rigid, longitudinal shaft, bodily reciprocating towards and from the center line of the car through elongated openings in the cross-frames, and supporting the dump doors when closed, and at all points between their closed and fully opened positions, and capable of holding them partially open at any intermediate point, is mentioned in the Caswell claims in controversy, the Caswell patent must be limited to a car having such a shaft when read in connection with the specifications which make such shaft a principal feature of the invention, and the drawings, in all of which the shaft is shown. Kampfe v. J. R. Torrey Razor Co. (C. C.) 149 Fed. 778. Having limited himself to such a shaft, Caswell cannot complain that the defendants use a crank shaft, an old and well-known device. Blamire v. Sheldon Axle Works (C. C.) 149 Fed. 780.

In view of the state of the art, Caswell's invention is not a pioneer. The advance towards the modern dump car has been gradual and proceeded step by step, so that no one can claim the complete whole. Caswell is therefore entitled only to the specific form of device which he produced. The defendants are entitled to their specific form so long as it differs from and does not include that of complainant. If the language of the thirty-first and thirty-second claims is not in any event readable upon the Koplin device, it becomes so if so broadly construed as to include the construction shown in the Ralston car. So too, if the language of the residue of the claims be given the broad construction contended for, I am unable to see why they may not be read upon one or more prior patented devices, such, for instance, as those of Bellows, Koplin, Wittig, and perhaps of others. The claims in controversy, to avoid invalidation, must be restricted to the particular construction and arrangements of parts to which Caswell has himself limited them by his specifications (McSherry Mfg. Co. v. Dowagiac Mfg. Co., 101 Fed. 716, 41 C. C. A. 627), and, so construed, there is no infringement. Not being a pioneer in his line of improvement, whatever may be the language of his claims, neither he nor his assignee can enjoin a device resembling his own in the adoption of ideas found in the prior art. Consolidated Valve Co. v. Crosby Steam Gauge & Valve Co., (C. C.) 7 Fed. 768.

Considering the two door-actuating mechanisms as entireties, they proceed along wholly different lines. That of the Ralston car is less complicated, less expensive to manufacture and maintain in repair, than that of the Caswell device, more useful, and productive of a different result, in that it dumps the

whole, or practically the whole, of the load. Conceding that these features are not necessarily tests of invention, nevertheless utility may help to determine the question; increased efficiency being accepted as an important factor. It is also significant that there has been a recognized need of such a car as that of the defendants, and that the efforts of others to meet it failed, and that success was attained only after repeated experiments. American Caramel Co. v. Thomas Mills & Bros., 149 Fed. 743, 79 C. C. A. 449.

In the course of the argument, several of the earlier patents were characterized as worthless and wanting in utility. There is no evidence that such was the case. The very fact that a machine is patented is some evidence of its operativeness, as well as of its utility; and when a prior patent appears on its face to be relevant to the consideration of the prior art, the later inventor should show that such device was not useful, and, if a patentable novelty of his own invention is in dispute, that such earlier patent did not disclose the principle of his later patent. E. M. Miller Co. v. Meridan Bronze Co. (C. C.) 80 Fed. 523.

The charge of conspiracy to appropriate the invention of the Caswell patent in suit is not sustained. Becker did not by his contract with the Caswell Car & Improvement Company sell his inventive powers to his employer; nor did he, to develop and put in practicable form his invention, use the property of his employer, or the services of its employés, or any part of his time to which it was entitled. He might, therefore, performing all the duties assigned to him in the line of his employment, exercise his inventive faculties in any direction he chose, with the assurance that whatever invention he might thus conceive or perfect would be his individual property. Solomons v. United States, 137 U. S. 346, 11 Sup. Ct. 88, 34 L. Ed. 667. Nor does the record show that Ralston acted in bad faith with the Caswell Car Company or its predecessor. He rendered them substantial financial assistance. On or about May 12, 1904, he frankly announced to the stockholders of the Caswell Car Company his desire to sever his connection with it, his relation with the Ralston Company, and his purpose to exploit its patents and pending applications for patents. On November 22d of the same year he resigned the presidency of the Caswell Company, and on that date Caswell, in consideration of a final settlement then made between him and the Ralston Car Company, and the satisfactory settlement of all matters of every kind and nature in controversy or dispute between them, acknowledged full satisfaction of every claim and demand whatsoever he then had or theretofore had had against Ralston and the Ralston Car Company, and disclaimed any right, title, interest, or claim in any patents or applications for patents then pending belonging to Ralston or the Ralston Car Company. This disclaimer was subsequent to the issuance of Becker's four patents, Nos. 763,947, 763,841, 762,118, and 768,722, all of which were granted to the Ralston Car Company as Becker's assignee.

Regarding the matters in controversy of which settlement was made Ralston, whose affidavit was offered in evidence by the complainant, has this to say: "When said agreement and transfer of stock was entered into at the request and in the interest of Mr. Caswell, affiant requested Mr. Caswell, on his part, to disclaim any right, title, or interest in any patents or applications for patents, which applications for patents were then pending, and which belonged to affiant or the Ralston Car Company, in order to prevent any possible annoyance from threats of future litigation with respect to said invention or patents, and in order that affiant might assure all such as were disposed to invest in the Ralston Company that the patents and pending applications owned by the company were free of all claims and demands by said Caswell or the Caswell Car Company, and said Caswell acquiesced in this agreement." On March 4, 1905, the board of directors of the Caswell Car Company adopted a series of resolutions, reciting that the license theretofore issued by such company to the Ralston Car Company for the use of patents belonging to the Caswell Car Company be canceled, no use whatever having been made of the same by the Ralston Car Company, and that the Caswell Car Company make claim to no right or interest whatsoever in any patent owned, used, controlled by, issued to, or assigned to the Ralston Car Company by Becker or any one else. The minutes of this meeting were approved at a subsequent meeting of the board.

On December 11, 1905, Caswell filed an application, serial No. 291,280, for a patent for an improvement in dumping mechanism for metallic cars. Excepting in some two or three instances, his drawings and the numerals shown on them are precisely the same as those shown in the Becker patent No. 763,841. The language of Caswell's specifications is largely identical with that found in the Becker specifications. Inadvertently an interference was declared with the Becker and other patents, and subsequently dissolved as to some of the parties. Thereupon Becker withdrew his application originally filed in the interference proceedings, and filed another for a reissue of patent No. 763,841, and the interference proceedings were resumed. Caswell, although he had made oath that he believed himself to be the original, first, and sole inventor of the improvement described and claimed in his specifications, and that he did not know and did not believe that the same was ever known or used before his invention or discovery thereof, or patented or described in any printed publication in any country before his invention or discovery thereof, filed no testimony, but suffered a judgment of priority of invention of the subject-matter in issue to be rendered in favor of Becker. In describing his invention, Caswell, using the precise language which Becker had used in his specifications, said: "My invention consists broadly in a crank shaft having a crank arm adapted to engage the doors, so that by merely revolving the shaft upon its axis in opposite directions the doors will be opened and closed." He also made oath that he completed his invention prior to February 19, 1904, the date of the Becker application, and that the original drawings attached to his affidavit were made on or before the dates of February 1, 1903, June 1, 1903, and June 28, 1903, respectively, and that a car embodying his invention was ordered from the Pullman Car Company on or about May 1, 1904, the working drawings of which were begun in the latter part of December, 1903, or the first part of January, 1904, and that the car was completed on or before July 1, 1904. He would have it believed that, at a time when he was protesting that a car could not be made of sufficient strength to dump substantially its entire load, he had drawings for just such a car, and that prior to July 1, 1904, he had completed working drawings for the construction of a car embodying his invention, which showed a crank-shaft mechanism, for which invention, notwithstanding the demand for a car of the character described, he witheld his application for a patent until December 11th following.

If the crank shaft type of door-actuating mechanism was not, on December 11, 1905, the equivalent of the door-actuating mechanism shown in the patent issued to him in 1902, and in his reissued patent, when did it become so? If the two mechanisms were equivalents, what was the occasion for his seeking a patent, the important feature of whose mechanism was a crank shaft? If he was the original, first, and sole inventor of such mechanism, why did he not at this first opportunity offer his proof to establish that fact and Becker's piracy, instead of suffering judgment for priority of invention to be entered in Becker's favor? Caswell was not produced, and did not offer himself as a witness. The answer, therefore, to these inquiries, must be found, if at all, in the facts and circumstances disclosed by the record. The reasonable conclusion to be drawn from the record, in my judgment, is that Caswell recognized that the two door-actuating mechanisms are different, and not equivalents, that he endeavored to avail himself of both; that priority of invention as between him and Becker, as regards the crank-shaft mechanism, belongs to Becker; and that the two freely given disclaimers stood as a barrier to his successful maintenance of his claim, in the interference proceeding, of original, first, and sole invention. The disclaimers and the abandonment of such proceeding do not consist with the charge of conspiracy made in the bill. Caswell and his successors in title may not be heard to say that at the time of the disclaimers and of the interference proceeding the precise nature of the Becker invention was not known.

I shall not enter into a discussion of the license granted to the Chicago, Burlington & Quincy Railroad Company, or to the Atchison, Topeka & Santa Fé Railway Company, or to Ralston, or the assignments made of the Caswell patents, because they do not, in my judgment, affect the result. Dueber

Watch-Case Mfg. Co. v. Robbins, 75 Fed. 17, 21 C. C. A. 198; Noonan v. Chester Park Athletic Club Co., 99 Fed. 90, 39 C. C. A. 426; Curtis on Patents (4th Ed.) § 215.

An order may be drawn dismissing the bill at the complainant's costs.

(172 Fed. 409.)

HOLT MFG. CO. v. BEST MFG. CO.

(Circuit Court of Appeals, Ninth Circuit. August 2, 1909.)

No. 1,608.

1. PATENTS (§ 34*)—INFRINGEMENT—ACTION AT LAW—EVIDENCE.

Where the question of invention is left to the jury in an action for infringement of a patent, no evidence tending to show the true state of the art at the date of the claimed invention should be excluded.

[Ed. Note.—For other cases, see Patents, Cent. Dig. § 38; Dec. Dig. § 34.*]

2. PATENTS (§ 276*)—SCOPE OF INVENTION—COMBINED STEAM HARVESTER AND THRASHER.

The Best patent, No. 410,306, for a combined steam harvester and thrasher, is for a claimed combination of elements all of which were old; the chief feature of novelty claimed for the combination being the operation of the cutting and thrashing machinery by means of a supplementary engine mounted upon the thrasher frame, to which steam is supplied from the boiler of the traction engine by means of a flexible pipe. Such supplementary engines had previously been used for the same purpose on similar machines driven by horse power. *Held*, that such patent was not a pioneer patent, but an improvement patent only, and that it was error in an action for its infringement to refuse to so instruct the jury, and to submit the question to them for decision.

[Ed. Note.—For other cases, see Patents, Dec. Dig. § 276.*]

In Error to the Circuit Court of the United States for the Northern District of California.

I. M. Kalloch and Francis St. J. Fox, for plaintiff in error.

J. J. Scrivner, for defendant in error.

Before GILBERT, ROSS, and MORROW, Circuit Judges.

ROSS, Circuit Judge. The defendant in error was plaintiff in the court below, where it brought this action for the alleged infringement of letters patent granted on the 3d day of September, 1889, to one Daniel Best, for an improvement in combined harvesters and thrashers. The defendant to the action was the Holt Manufacturing Company, which is the plaintiff in error here. The trial resulted in a verdict and judgment in favor of the plaintiff for $35,000.

Long before the issuance of the plaintiff's patent, mowers and reapers had been superseded on many of the great western grain fields by combined machines, operated by steam as well as by horse power, which cut, thrashed, cleaned, and sacked grain. The plaintiff's patent, as has been said, was for an improvement in combined harvesters and thrashers. No new element entered into the make-up of its machine; but the contention on its behalf was and is that it was a patentable combination of old elements, whereas, the conten-

tion on behalf of the defendant was and is that it was a mere aggregation of such elements.

Of course, if it was a mere aggregation, that is to say, if what Best did was merely to bring together a lot of old elements, which in their new places did no more than their old work, there was no invention, and the action must necessarily fail; but if the old elements are so assembled as to coact in a unitary organization, and thereby produced a new and useful result, and such combination be more than a mere mechanic skilled in the art could have suggested, then patentability may be properly affirmed of it. That was really the only issue presented by the pleadings; the answer of the defendant merely denying, "generally and specifically, each and every allegation contained in the plaintiff's complaint."

Best testified that the difficulty with the old horse-power machines was that the power came from the movement of the horses operating upon the main wheels of the machine, and in his testimony sought to show, among other things, that he had overcome that difficulty by substituting therefor steam power. We extract from his testimony:

"I was manufacturing a horse combined harvester for about three years before I conceived the idea of making them steam combined.

"Q. Tell the jury what a combined harvester is, going back to that old harvester that was in operation that you made and was in general use? A. The horse-power, you mean?

"Q. Yes, tell them what a horse-power machine was at that time, not the present machine that is made nowadays. A. The horse-power machine consists first of a header to cut the grain, then a thrashing machine to thrash it, and then a grain separator to separate the different kinds of grain, to put them in separate sacks. This machine was driven, got its power from one main, big wheel.

"Q. What do you call that wheel? A. The main driving wheel. It was located on the left-hand side of the machine. It is the same wheel that carries the machine, and the wheel that carries the right-hand side of the machine, the opposite side, that wheel also drove the header part, so the whole mechanism is driven from the machine. The difficulty with that machine was, after experimenting with it two or three years, we found we could not take up down-grain. The difficulty with these horse-power machines in taking up down and heavy grain is that we could not get power enough from the wheels, strong enough, to drive those sickles and separators when she was cutting this heavy down-grain and taking up large quantities of straw. Horses had to travel at just the same speed all the time, and when they would come to this thick, heavy down-grain, if you would undertake to take it up it would choke down, and the result was the horses would run over it, and you would leave it on the ground. This, I discovered, was an enormous loss to the farmers, and as high as $6 or $8 or $10 an acre was left on the ground. I went to work immediately to see if I could not contrive some plan whereby we could take up all of this straw and thrash it and get the grain clear off the ground where those big crops were. I figured out that it would require from 80 to 100 horse power to do it. To start first, I built a traction combined harvester of large size, and then I applied an engine on my harvester frame, about 30 horse power. I found by this machine that, when I went in this heavy grain, I could travel at any speed I wanted, travel from a quarter or half a mile to a three mile speed, just according to the amount of straw that was on the ground, and that I could stop still. Whenever this heavy straw pushed ahead of my machine, or where it all rotted off on the ground, where it drops down and gets damp, it lays perfectly loose on the ground, and no machine will go through it and take it up because it will shove right ahead. On this machine, when it shoved ahead, it would throw up 4 or 5 feet high, and I could back up the machine in a few seconds and pick that up and take it aboard and bring it on my header with the reel and stand still there and thrash it out. On that

same ground, if a horse-power machine was working, or a header, or a sub-binder, or even a mower, you could not save at best more than two-thirds of it, while in the process we take it right down within a couple of inches of the ground and get it all."

The record shows that, about two years before what the plaintiff claims as the Best invention, one Berry had procured the issuance to him of a patent for a "combined steam traction header and thrasher," which invention the patentee declared relates "to that class of agricultural machines known as 'combined harvesters and thrashers,' and particularly to that class in which the power of the engine is directed not only to the operation of the several parts of the machine, but also to the progression of the machine," the construction and combination of the devices of which the patentee specifically described and claimed in a series of claims, the eleventh of which is as follows:

"11. In a combined steam traction harvester and thrasher, the frame, A, and an engine carried thereby, whereby its progression is effected, in combination with the thrasher, I, connected with the frame, A, a supplementary engine, M, and power transmitting devices from said last-named engine to the cylinder of the thrasher, whereby it is driven at a uniform rate independent of the progression of the machine, substantially as described."

To further show the state of the art at and prior to the time of Best's claimed invention, the defendant undertook to show by the witness Kincaid, who testified that as early as 1883 he was called upon to design a steam harvester for one Pritchard, to be hauled by horses, though operated by means of a boiler and engine attached to the separator, that he saw that completed machine either in 1885 or 1886, and, being asked to describe it, the court, on the objection of the plaintiff that it was pulled by horses, declined to permit the witness to do so, although he testified that its thrashing and cutting machinery was operated by steam by means of a boiler located on the frame of the thrashing machine, and, on motion of the plaintiff, struck out the testimony of the witness. We think those rulings erroneous. It is not always easy, as the court below told the jury, to determine the true line of distinction between invention and that which one skilled in the art many readily suggest; but where, as in the present case, the determination of that question was left with the jury, we think it clear that nothing tending to show the true state of the art at the date of the claimed invention should have been excluded from their consideration. See 3 Robinson on Patents, 1020; Aron v. Manhattan Ry. Co., 132 U. S. 84, 10 Sup. Ct. 24, 33 L. Ed. 272; Penn. Ry. Co. v. Truck Co., 110 U. S. 490, 4 Sup. Ct. 220, 28 L. Ed. 222; Benbow-Brammer Co. v. Richmond Works (C. C.) 159 Fed. 161.

On the trial the plaintiff's witness Smyth, being asked on his direct examination wherein, in his opinion, Best's invention lay, said:

"I should say that it lies in bridging the gap between the traction engine and the harvester and header mechanism by crossing that gap with a device adapted to convey the energy or power by steam, rather than mechanical means to an engine located upon the thrasher frame so that the power of that engine may be applied to its greatest perfection to the header and thrasher mechanisms; in other words, in the substitution—I am going to use a couple

of unusual terms, but I think they will apply here—the substitution of a molecular transference of energy rather than a molar, that is, through a fluid medium, rather than through a mechanical medium."

And, in the same connection:

"In my opinion it involved the highest type of invention, that inspiration of idea, that happy thought of changing the method of transferring the power back from the traction engine to the other devices, was, in my opinion, one of the happiest thoughts that could be imagined."

When asked on cross-examination, in regard to his foregoing statements, the following question:

"Q. You think that the discovery that a flexible pipe would carry steam from the boiler in the position in which I have located it to the supplemental engine in the harvester frame is an indication of inventive talent and the exercise of inventive faculty, do you?"

—the witness Smyth answered:

"Under the circumstances, I emphatically say that it is an example of the highest type of inventive faculty."

Subsequently the defendant offered in evidence a patent issued to one Glover on the 8th day of December, 1888, for a traction engine, one feature of which was the conveying of steam through a flexible pipe from a boiler and engine carried on an engine truck, to a steam chamber arranged below a water tank carried on a separate frame. We extract from the testimony of the witness Smyth:

"Q. Did you hear Mr. Best testify that the novelty of his invention consisted in mounting a supplemental engine on the harvester frame with a flexible steam connection? A. I don't remember it, but I assume he did say so.

"Q. If he did say so, do you think he told the truth? A. Oh, certainly.

"The Court: Q. That is, that the crux of his invention was the mounting of the supplemental engine upon the harvester frame, and connecting it with a plastic or flexible connection? A. Yes, sir.

"Mr. Kalloch: Q. If he did say so, was that correct? A. Yes, sir."

Certainly, if it be true that the novelty of the Best invention consisted in the mounting of his supplemental engine upon the harvester frame and connecting it with the flexible pipe, the defendant was entitled to show, if it could, that that idea, as well as mechanism for such pipes, was old. There was therefore error in excluding, as the court below did, the Glover patent.

On the trial the defendant requested the court to instruct the jury, among other things, as follows:

"The Best patent sued upon in this case is in no sense a pioneer patent. In view of the prior art, as disclosed by the Berry patent, the construction which the court is required to give the Best patent places it in a class wherein the application of the doctrine of mechanical equivalents is very narrow, and the patentee is limited to the precise devices and combinations shown and claimed in his patent. If therefore you find from the evidence that the defendant has not made or used or sold a combined harvester and thrashing machine having a supplemental or auxiliary engine mounted upon a platform at the side of the thrashing machine, your verdict should be for the defendant."

The court refused to so instruct, but, on the contrary, by its instructions, left it to the jury to determine whether or not the Best patent was a pioneer one, to all of which the defendant excepted.

Allusion has already been made to the fact that each and every element entering into the Best patent was old, and the record shows

that the novelty claimed for it consisted chiefly in the location of the supplemental engine on the frame of the harvester, and the transferring of the power from that engine to the header and thrasher mechanisms by means of the flexible pipe; in other words, what Best did was, not to invent a combined steam harvester, but to make improvements in such harvesters, and his patent shows upon its face that he himself so characterized his invention. Leaving out of consideration the Pritchard machine and the Glover patent, the record shows that the preceding patent issued to Berry was for a combined steam harvester and thrasher, in which the power of the engine was directed not only to the operation of the several parts of the machine, but also to its progression. Among other things, it consisted: (1) Of a traction-engine frame mounted on wheels, whose sole function was the supporting and progression of the machine, effected by means of a boiler and engine; the driving power being transmitted through gears to the traction wheels. (2) Of a header frame connected by hinges with the side of the traction-engine frame. (3) A draper-platform carrying the draper, elevator, sickle, reel, and such other parts as are necessary thereto; the various parts of the header being operated by power transmitted from the engine located on the traction-engine frame. (4) Of a thrasher located on the left-hand side of the traction-engine frame, and its inner side attached to that frame by hinges, whereby it accompanies the traction engine, but still has its independent motion, enabling it to conform itself to the ground over which it travels. (5) A self-feeder of the thrasher, with which the elevator spout of the header communicates. (6) The cylinder of the thrasher. (7) An endless chain for driving the endless apron-platform and straw-carrier of the thrasher; such parts being operated from the engine located on the traction-engine platform by means of a shaft and connections, which engine also operated the elevator and the riddle, the cylinder, feeder, fan, and the pickers of the thrasher, however, being driven by means of an independent engine also located upon the traction-engine frame, and which supplemental engine is operated by steam taken from the boiler of the main engine. (8) Of an elevator by which the thrashed grain is taken up to the hopper, from which it is discharged to the sacker. (9) Of certain water tanks with suitable connecting pipes for the supply of water to the boiler. And (10) of fly wheels on the driving shaft of the main engine.

The operation of his machine was thus described by Berry:

"The progression of the entire machine is in effect wholly from the main engine by means of power transmitted to the traction wheels, a, which, as I have heretofore mentioned, serve no other purpose than that of supporting the machine and of causing its progression. They transmit no power to operate the parts of the machine. In the progression of the machine the hinged header frame on the one side, and the hinged thrasher on the other, have their own independent motion, and do not therefore cramp, whatever may be the character of the ground over which they pass. The draper-platform, with all its parts, is adjusted easily and conveniently, being kept level in all positions. The course of the grain is the usual one and needs no detailed description. The straw is discharged at the rear end free of dust and chaff, and is carried by the chute, O, down to the platform to where the engineer stands, and the surplusage is stored in the receptacle, Q. The whole machine is readily started from the seat p 10."

Berry then proceeded to set forth his claims, the eleventh of which has been hereinbefore set out.

We think it very plain, from what has been said, that Best cannot be properly regarded as a pioneer inventor, who is one who stands at the head of the art, or who has at least made such a distinct step in its progress as to distinguish it from a mere improvement or perfection of what had gone before, and that the court below should have so instructed the jury, and not have left it to them to determine that question.

For the reasons stated, the judgment must be, and hereby is, reversed, and the cause remanded for a new trial.

(172 Fed. 328.)

DELAWARE & H. CO. v. FLANNELLY et ux.†

(Circuit Court of Appeals, Third Circuit. May 19, 1909.)

No. 29.

RAILROADS (§ 348*)—INJURY TO PERSON ON CROSSING—CONTRIBUTORY NEGLIGENCE.

Evidence *held* to establish contributory negligence of a plaintiff, who was struck and injured by a fast train while driving over a dangerous crossing on defendant's railroad, where there were a number of tracks, with which she was familiar, where by her own testimony, after having stopped to look and listen at the usual place, some 40 feet before reaching the first track, and waiting for a freight train on such track to pass, which train, owing to a curve in the track, obstructed the view of any train approaching from the opposite direction, she at once drove on the crossing behind such train, without waiting until she could see whether the other tracks were clear, and was struck while crossing the second track.

[Ed. Note.—For other cases, see Railroads, Cent. Dig. §§ 1144-1150; Dec. Dig. § 348.*]

In Error to the Circuit Court of the United States for the Middle District of Pennsylvania.

For opinion below, see 164 Fed. 303. See, also, 165 Fed. 350.

James H. Torrey, for plaintiff in error.

Paul J. Sherwood, for defendants in error.

Before GRAY and BUFFINGTON, Circuit Judges, and BRADFORD, District Judge.

BRADFORD, District Judge. John Flannelly and Mary Ellen Flannelly, his wife, the defendants in error, brought an action of trespass in the Circuit Court of the United States for the Middle District of Pennsylvania, against the Delaware and Hudson Company, the plaintiff in error, hereinafter called the defendant, to recover damages for bodily injuries to Mrs. Flannelly, the loss to her husband of her services, and the injury and destruction of certain personal property through the negligence, as alleged, of the defendant. It is alleged in substance in the statement of claim, among other things,

† Rehearing denied September 4, 1909.

that while the plaintiff, Mrs. Flannelly, was with due care attempting to drive a horse and wagon across the railroad tracks of the defendant at a point where they cross at grade a public highway on which she had been travelling, leading from Scranton to Pittston, Pennsylvania, the defendant

"so negligently operated its freight trains upon said tracks as to destroy the usual opportunity at said crossing, to see or hear approaching trains and then did negligently and unlawfully run her down by a rapidly propelled passenger train, commonly called the 'Flyer,' which train was behind time and was being run at said time at great and unreasonable speed, and negligently approached said crossing without due and timely warning of its approach."

The case was tried before a jury and a verdict was found as follows:

"The jury do find in the above case in favor of the plaintiff, Mary Flannelly in the sum of $2,000, and in favor of John Flannelly in the sum of $500.00. Defendant company was negligent in failing to sound the blast of a whistle at the proper place and at the proper time at the crossing of the defendant where the plaintiff Mary Flannelly received her injuries."

A motion for judgment non obstante veredicto was denied and judgment in favor of the plaintiffs was entered on the verdict. The assigments of error though six in number raise in substance only the two following questions: First, was there or not sufficient evidence of actionable negligence on the part of the defendant to justify the jury in finding its existence? And, secondly, if the defendant was guilty of such negligence, did or not contributory negligence on the part of the plaintiff so clearly appear that the court below was bound to render judgment for the defendant non obstante veredicto? The counsel for the defendant at the hearing virtually abandoned, and, we think, properly, the contention that it had not been culpably negligent, and treat as "the real and vital point in the case" the question of contributory negligence. There is evidence in the case to the effect that Mrs. Flannelly on the morning of July 30, 1907, was driving a horse attached to a light lumber wagon, in which she and two small boys were riding, on her way from her home in Pittston township, Luzerne county, Pennsylvania, to the city of Pittston, about five miles distant; that to reach her destination she proceeded on a public highway which ran through the village of Dupont or Smithville; that in pursuing this route it was necessary to cross at grade the railway tracks of the defendant from east to west and, in approaching those tracks, to cross at grade the double tracks of the Lehigh Valley Railroad "cut-off" distant from the defendant's tracks several hundred feet; that the defendant's tracks were three in number and at the crossing parallel to each other and running in a generally northerly and southerly direction; that on the westerly side of the defendant's tracks and in close proximity to them there was a switch or branch track of the Lehigh Valley Railroad extending to a coal breaker about half a mile north of the crossing; that between the Lehigh Valley Railroad "cut-off" and the defendant's tracks and at the distance of between 20 and 50 feet from the latter there was a place where persons, driving such a conveyance as that occupied by Mrs. Flannelly, usually stopped to look and listen before undertaking

to cross the defendant's tracks; that Mrs. Flannelly after crossing the "cut-off" stopped at the usual place, she then being from 40 to 50 feet from the defendant's tracks, and looked and listened for approaching trains before undertaking to cross those tracks; that when she reached that place she saw a long freight train of high box-cars coming round a curve in the track from the north on its way southwardly towards Pittston; that it was moving slowly and she waited for it to pass; that it passed over the crossing on the track of the defendant nearest to her; that while thus waiting two trains, one moving north and the other south, passed behind her on the tracks of the Lehigh Valley Railroad "cut-off," and still another train passed to the north over the crossing on the switch or branch track of the Lehigh Valley Railroad which was the fourth track from her; that she did not see any train passing on the third or westerly track of the defendant; that after the freight train on the first or nearest track had moved to the south and cleared the crossing some distance and she had looked and listened in vain for an approaching train or a danger signal, she drove to and upon the first track so far that the head and front feet of the horse were on the second track, and there again stopped and looked and listened without seeing or hearing any approaching train; that she then drove on until the horse was over the middle of the second track when she first saw the train, the locomotive of which struck the wagon; that at this juncture the horse reared and pranced and delayed her several seconds notwithstanding her application of the whip to him several times; and that she drove across the second track but not far enough to clear the locomotive which struck the hind wheel of the wagon throwing its occupants out.

Whether Mrs. Flannelly was delayed on the second track by unmanageable behavior on the part of the horse she was driving was a question for the jury. It is to be assumed that the jury believed she was. Had it not been for that delay the accident undoubtedly would not have happened. But this circumstance does not necessarily negative the existence of contributory negligence on her part operating as a proximate cause of the accident. She had, it is true, a right in the pursuit of her lawful journey to Pittston to use the public highway notwithstanding the fact that in so doing she would cross the defendant's tracks. It was expected and intended that the public using that highway should pass over the crossing. Otherwise the crossing would not have been placed there. But she was bound under existing conditions to exercise due care and circumspection in attempting to pass over the defendant's second track. There is uncontradicted testimony to the effect that while Mrs. Flannelly was accustomed to driving horses, the horse driven by her at the time of the accident was "kinder skittish sometimes." If, however, she in all respects observed reasonable care and caution in attempting to cross the tracks, we should not be prepared to hold that unmanageable behavior on the part of the horse, whether attributable to a restive or excitable nature or to the noise of passing trains, should be imputed to her as a fault. But from a careful examination of the evidence before us it is clear beyond all reasonable doubt that Mrs. Flannelly did not observe such care and circumspection as the law required

of her, and that there was nothing before the jury to justify a verdict importing that she had exercised such care and circumspection. The uncontradicted evidence shows that the Dupont or Smithville crossing was considered and was a dangerous one to any person negligently passing over it; that Mrs. Flannelly lived in the neighborhood and was familiar with the crossing; that at the "usual stopping place" a person at a distance of 40 feet from the first or easterly track of the defendant could, unless his view was obstructed by a passing train or other object, see a train approaching from the south at the distance of 2,300 feet; that about 700 or 800 feet to the south of the crossing the defendant's tracks curved to the west passing under the viaduct of a traction company situated about 1,950 feet below the crossing; and that owing to such curvature trains on any of the defendant's tracks below the crossing and above the curve would be calculated to conceal an approaching train whether below or above the viaduct. There is testimony to the effect that the train which struck the wagon was a fast passenger express known as the "Flyer"; that it was behind time; and that it was moving at a high rate of speed as it came northwardly round the curve to the south of the crossing and while approaching the point of collision. Mrs. Flannelly's own statements condemn her as negligent. Her testimony relative to the freight train of box-cars is in part as follows:

"Q. You say while you were stopped there before you went on the track, that a train passed on the D. & H. on the nearest track to you? A. Yes, sir. Q. You are very sure about that? A. I know the train passed on that track. Q. It was going towards Pittston? A. Yes, sir. Q. That is, going southerly? A. Yes, it was going towards Pittston. * * * Q. How far had the train that was on the track nearest to you gone over the crossing, before you started to go over? A. Towards the shanty. Q. What did you say? A. Towards the shanty—the flag shanty, some kind of a shanty was there—there was a little shanty there. Q. Would you say it was a hundred feet? A. I could not say that, it might have been more than a hundred feet; I couldn't say that for certain. Q. Would you say it was as much as two hundred feet? A. I might if I was there and took an interest; I haven't been there and took an interest of it since. Q. You started to go across that track? A. Yes, sir. Q. This train which was going down on the track nearest to you cut off your view way down the road, did it not? A. Yes, sir, cut off my view until I got on the second track—when the horse was on, and the engine pushing right towards me from up the valley—I couldn't make escape."

Here, then, was a woman of maturity, of sound mind, familiar with the crossing, knowing that from the usual stopping place she could see, in the absence of any obstruction, a train approaching from the south as far away as the viaduct or even further, who waited until the train of box-cars shut off her view to the south, and did not wait, notwithstanding the manifest danger of such an omission, until the defendant's tracks were sufficiently clear to enable her to cross them in safety. It is hard to conceive of a more negligent or reckless disregard of one's safety than was displayed by her in attempting to cross the defendant's tracks at the particular time she did and under the then existing conditions. Further, on her own showing, uncontradicted in the case, she failed to observe due care not only in undertaking to cross the tracks before she had an unobstructed view of them to the south, but in starting as she did from her first stop

on the tracks when she was behind the rear end of the receding train of box-cars. She testified as follows:

"Q. How far could you see down the second track, when you stopped the second time with your horse's feet about the first track? A. To the nearest of my judgment, I should think about three hundred feet."

With this limited scope of vision it was perilous to the last degree to attempt to cross the second track as she did. She states that at the point of her second stop where she had only this limited view of the track to the south she "looked and listened up and down the track" before starting. That this was an utterly inadequate precaution is palpable in view of the fact that a train coming up the second track at the rate of 50 or 60 miles an hour would cover from 73 to 88 feet each second. But we do not attach so much importance to what Mrs. Flannelly did after reaching the first track as to what she did before. The horse she was driving may have become excited by the noise of passing trains and unmanageable, and she may have lost her presence of mind and resorted to mistaken tactics. The fatal error she committed was in leaving the "usual place" and getting on the tracks before she had an unobstructed view. Her uncontradicted statements disclose contributory negligence on her part. There was nothing in the case to warrant a verdict based upon an absence of all contributory negligence, and as there was nothing to warrant such a verdict the motion for judgment non obstante veredicto should have been granted.

The judgment below must be reversed, with costs, and it is so ordered.

(172 Fed. 332.)

SKUBINSKY v. BODEK et al.

(Circuit Court of Appeals, Third Circuit. May 28, 1909.)

No. 16.

BANKRUPTCY (§ 236*)—EXAMINATION OF BANKRUPT—RIGHT TO EXAMINE BEFORE ADJUDICATION.

Bankr. Act July 1, 1898, c. 541, § 21a, 30 Stat. 552 (U. S. Comp. St. 1901, p. 3430), which empowers a court of bankruptcy to require a bankrupt to appear before a referee "to be examined concerning the acts, conduct or property of a bankrupt, whose estate is in process of administration under this act," does not authorize a reference for the examination of an alleged bankrupt before his adjudication and before the time has arrived when he is required to answer the petition, on motion of a receiver appointed for his property, which cannot be said to be "in process of administration" under the act; the function of the receivership being solely preservative of the estate, and not administrative.

[Ed. Note.—For other cases, see Bankruptcy, Dec. Dig. § 236.*]

Buffington, Circuit Judge, dissenting.

Appeal from the District Court of the United States for the Eastern District of Pennsylvania.

Petition for review of order granting special reference.

Clinton O. Mayer, for appellant.

Alfred Aarons and Henry N. Wessel, for appellees.

Before GRAY and BUFFINGTON, Circuit Judges, and BRADFORD, District Judge.

BRADFORD, District Judge. This is a petition for the review of an order of the District Court of the United States for the Eastern District of Pennsylvania, made November 12, 1908, granting a special reference with power to the referee "to take testimony, summon and require the attendance of witnesses, and demand the production of such books, papers, documents and other articles as may be required in the investigation of the matters pertaining to the business and conduct of the alleged bankrupt aforesaid, and all other persons with whom he may have transacted business, or in connection with whom he may have committed unlawful acts." The respondents in the petition for review filed a petition in involuntary bankruptcy against Fritz Skubinsky November 3, 1908, alleging, among other things, that he was insolvent; that he had transferred, concealed and removed, and permitted to be concealed and removed a large portion of his personal property with intent to hinder, delay and defraud his creditors; and that while insolvent he had transferred a sum of money to certain of his creditors, named in the petition, with the intent to prefer them over his other creditors. On the filing of the petition in bankruptcy it was ordered that Skubinsky should appear in the court below November 18, 1908, and show cause why the prayer of the petition should not be granted, and further that a copy of the petition together with a subpœna should be served on him. A subpœna, returnable November 18, 1908, together with a copy of the petition, was duly served November 6, 1908. W. Bodek was on the day of filing the petition appointed receiver of the assets and effects of Skubinsky and authorized and directed to cause an inventory and appraisement of such assets and effects as may come into his possession to be made and to apply to the court "for leave to take such action as to the administration of the estate as may seem meet and proper," and it was ordered that the alleged bankrupt should "forthwith turn over and deliver to the said receiver all books, papers, deeds and documents bearing upon or relating to his business and affairs." The receiver presented November 12, 1908, a petition on which the order complained of was granted, setting forth:

"That he is the receiver in the above entitled case, and has duly qualified. That your petitioner is informed, believes and expects to be able to prove that within the last week preceding the filing of the petition in bankruptcy in this matter, the alleged bankrupt above named and numerous other persons acting in collusion with him, were guilty of removing and concealing property and assets of the said alleged bankrupt. That it is essential for the interests of this estate that an investigation be commenced immediately for the purpose of discovering what disposition has been made of the assets which were in the possession of the alleged bankrupt immediately before the filing of the petition in bankruptcy, and of attempting to regain for the interest of this estate assets which have been unlawfully and fraudulently concealed and removed. Petitioner represents that the delay incident to an adjudication and the calling of a meeting of creditors before a referee upon the usual notice would render practically impossible the proper investigation of the fraudulent acts which have been committed in and about the various attempts which have been made to remove and conceal the assets which lawfully belong to this estate."

It appears from the record that the order complained of was granted before Skubinsky made answer to the petition in involuntary bankruptcy, or in any manner raised an issue, either of law or of fact, with respect to its averments, and six days before the time fixed for the showing of cause why the prayer of that petition should not be granted, and thirteen days before Skubinsky was adjudicated a bankrupt. There are three assignments of error, each of them challenging the legality of the order of special reference. The last reads as follows:

"That the learned judge of the District Court erred in granting the special reference before the adjudication of the alleged bankrupt and before his estate was in process of administration."

Section 21a of the bankruptcy act (Act July 1, 1898, c. 541, 30 Stat. 552 [U. S. Comp. St. 1901, p. 3430]), as amended February 5, 1903 (Act Feb. 5, 1903, c. 487, § 7, 32 Stat. 798 [U. S. Comp. St. Supp. 1907, p. 1028]), provides, among other things, as follows:

"A court of bankruptcy may, upon application of any officer, bankrupt, or creditor, by order require any designated person, including the bankrupt and his wife, to appear in court or before a referee or the judge of any state court, to be examined concerning the acts, conduct or property of the bankrupt whose estate is in process of administration under this act."

The authority conferred by this section to grant a reference for the purpose of throwing light on "the acts, conduct or property of the bankrupt" is limited to the case of one "whose estate is in process of administration under this act." While by virtue of section 1 of the act the term "bankrupt" may include a person against whom an involuntary petition has been filed as well as one who has been adjudged a bankrupt, section 21 contains the significant and unambiguous words "bankrupt whose estate is in process of administration under this act." We do not think that the appointment and qualification of the receiver and his exercise of official functions before the adjudication of Skubinsky as a bankrupt and, indeed, before the return of the rule to show cause or the presentation of any issue of law or fact in the case, can be tortured into process of administration of his estate under the act. It did not appear when the order of special reference was made that he ever would be adjudged a bankrupt. The appointment of receivers in bankruptcy can be justified only where it shall be found "absolutely necessary, for the preservation of estates, to take charge of the property of bankrupts after the filing of the petition and until it is dismissed or the trustee is qualified." Such a receivership certainly up to the time of an adjudication is purely a precautionary measure. Until after an adjudication the function of a receivership is not administrative of the estate in bankruptcy, but solely preservative. And this is equally true whether receivers in bankruptcy are or are not authorized by the court to conduct the business of alleged bankrupts for limited periods. While such authority can be conferred upon receivers only "if necessary in the best interests of the estates," the granting of such authority and action thereunder prior to an adjudication of bankruptcy can in no legitimate sense be deemed process of administration of the estate under the act.

It doubtless is true that a receiver may be authorized by the court, even before an adjudication, to collect and secure possession of moneys and other property belonging to the alleged bankrupt; but such action on the part of the receiver before an adjudication does not constitute or involve "process of administration under this act." It is simply gaining control of the estate which is to be subjected to the process of administration if an adjudication of bankruptcy shall be made. If the appointment of a receiver before adjudication per se constitutes process of administration and no adjudication be made the remarkable result is presented of a process of administration, and consequently a partial administration, in bankruptcy, of the estate of the alleged bankrupt where absolutely no beneficial object or purpose of the bankruptcy act can by any possibility be effected. The special reference before adjudication to inquire into "matters pertaining to the business and conduct of the alleged bankrupt," was premature, inquisitorial and not to be tolerated. Common fairness requires that the alleged bankrupt before being subjected to such a proceeding and before any order can properly be made in that behalf, should have the opportunity to make defense to the petition seeking his adjudication as a bankrupt. We are not aware of any provision in the bankruptcy act when fairly construed which justifies the order of special reference now before us.

The order must, therefore, be reversed, with costs, and it is so ordered.

BUFFINGTON, Circuit Judge (dissenting). I dissent from the construction placed by the majority opinion on section 21, cl. "a," of the bankrupt act, which provides:

"A court of bankruptcy may, upon application of any officer, bankrupt, or creditor, by order require any designated person, including the bankrupt and his wife, to appear in court or before a referee of the judge of any state court, to be examined concerning the acts, conduct, or property of a bankrupt whose estate is in process of administration under this act."

By that construction a court of bankruptcy is powerless, until adjudication of an alleged bankrupt, to examine him thereunder. As this construction is based on the ground that until that time there is no "bankrupt whose estate is in process of administration," it follows that no other person can be examined until after adjudication, for such inquiry being limited to "the acts, conduct or property of a bankrupt whose estate is in process of administration," and prior to adjudication there being no such person, it follows that no witness can be called under this section until after adjudication. Now, as 20 days must elapse, whether the bankruptcy is contested or conceded, before adjudication, during this time the court is powerless to act under this section. Of this period Judge Hough, of the Southern District of New York, has, in Re Fleischer, 18 Am. Bankr. Rep. 197, 151 Fed. 81, well said:

"The desirability and importance of promptly conducting an investigation into the affairs of any person petitioned into the bankruptcy court has been too often shown to be open to doubt. To wait until adjudication to ascertain from the bankrupt's own lips the situs of his property and his own explanations of the situation in which the creditors find themselves is in many cases

giving to those guilty of fraud the necessary time to permit the fraud to be consummated and the fruits thereof secured. In my opinion it is not too much to say that a skillful and vigorous use of early examinations of involuntary bankrupts is the one thing which enables creditors to prevent this statute being easily turned into a shield for dishonesty and a potent aid to fraud."

And in the case now before us such construction made a court powerless to act, although the facts are as stated by the untraversed petition of the court's receiver that—

"the alleged bankrupt" was "guilty of removing property and assets, * * * that it is essential for the interests of this estate that an investigation be commenced immediately for the purpose of discovering what disposition has been made of the assets which were in the possession of the alleged bankrupt immediately before the filing of the petition in bankruptcy," and "that the delay incident to an adjudication * * * would render practically impossible the proper investigation of the fraudulent acts which have been committed."

The bankrupt law has two objects: One to collect all the bankrupt's property and marshal it; the other to discharge him from all liabilities when he has surrendered all his property. To enable the court to accomplish this, the act makes different provisions. Thus it is made the duty of the bankrupt by section 7, cl. 1, "to attend the first meeting of his creditors, if directed by the court or a judge thereof to do so," and by clause 9, "when present at the first meeting of creditors and at such other times as the court shall order, submit to an examination concerning the conduct of his business, the cause of his bankruptcy, his dealings with his creditors and other persons, the amount, kind and whereabouts of his property, and in addition, all matters which may affect the administration of his estate." Now it is clear that, while this section makes it the duty of the bankrupt to be examined at the first meeting of creditors and also "at such other times as the court shall order," it makes no provision when those other times are; but as the creditors' meeting can be adjourned and the bankrupt examined at such adjourned creditors' meeting—Collier on Bankruptcy (4th Ed.) p. 234—it is evident we must look elsewhere in the act for provisions for examinations "at such other times as the court shall order." And since provision was thus made for examinations first and subsequent before the referee, it would seem the act would naturally make the other examinations in advance of adjudication. Such we find to be the case. Thus by section 9, cl. "a," the court is authorized, "at any time after the filing of a petition by or against a person," on proof that "such bankrupt is about to leave the district * * * to avoid examination," to cause his arrest and to imprison him or commit him to bail "for his appearance for examination, from time to time, not exceeding in all ten days."

Now two things are to be here noted: First, that the person against whom a petition is filed is herein described as a bankrupt; and, secondly, that if such bankrupt is arrested within 10 days after the petition is filed against him, the examination ordered must necessarily take place before adjudication, since no adjudication can be made short of 20 days. So, also, section 3, cl. "d," compels a person against whom a petition is filed and who denies insolvency to appear in advance of adjudication and "submit to an examination and give testimony as to all matters tending to establish

solvency or insolvency." And section 2, cl. 3, authorizes the appointment of receivers, a power exercised without question in advance of adjudication, and authorizes them "to take charge of the bankrupt's property after the filing of the petition," thus recognizing both the court's administrative duty in advance of adjudication and the use of the word bankrupt to describe the debtor. Moreover, as by section 2, cl. 7, the court is authorized to cause the estates of bankrupts to be collected, reduced to money, and distributed, and by clause 15 "to make such orders, issue such process and enter such judgments, in addition to those specifically provided for as may be necessary for the enforcement of this act," it would seem, if to collect the property of the bankrupt it became necessary to obtain from him information that would aid in its collection, that apart from any section specifically authorizing thereto this general power in clause 15 would warrant the court in taking effective summary proceedings. Indeed, the plain, direct, and simple agencies of the bankrupt court in its administrative capacity is recognized in Mueller v. Nugent, 184 U. S. 14, 22 Sup. Ct. 274, 46 L. Ed. 405, where the court say:

"In other words, the question reduces itself to this: Has the bankrupt court the power to compel the bankrupt, or his agent, to deliver up money or other assets of the bankrupt, in his possession or that of some one for him, on petition and rule to show cause? Does a mere refusal by the bankrupt or his agent so to deliver up oblige the trustee to resort to a plenary suit in the Circuit Court or a state court, as the case may be? If it be so, the grant of jurisdiction to cause the estates of bankrupts to be collected, and to determine controversies relating thereto, would be seriously impaired, and, in many respects, rendered practically inefficient. The bankruptcy court would be helpless indeed if the bare refusal to turn over could conclusively operate to drive the trustee to an action to recover as for an indebtedness, or a conversion, or to proceedings in chancery, at the risk of the accompaniments of delay, complication, and expense, intended to be avoided by the simpler methods of the bankrupt law."

And there is no reason for withholding, and every reason for exercising, the power of the court to act by these "simpler methods of the bankrupt law" during these 20 days. True, the alleged bankrupt may not be adjudicated; true, his property, of which the court had taken constructive possession by the filing of the petition and actually by the appointment of its receiver, might subsequently be abandoned to him; but from the moment the petition was filed the jurisdiction of the court attached, and because jurisdiction had attached the administration of the trust and estate had begun. As was said in Mueller v. Nugent, supra:

"It is as true of the present law as of that of 1867 that the filing of the petition is a caveat to all the world, and in effect an attachment and injunction."

But, while all the provisions cited enable a court of bankruptcy to call before it the bankrupt for examination, section 21, cl. "a," provided for calling before it other designated persons, "including the bankrupt." Its purpose, so far as the bankrupt is concerned, is well stated in the referee's opinion in Re Cobb, 7 Am. Bankr. Rep. 104, which was adopted by Judge Lowell:

"It is to be noted in the first place that the examination of a witness summoned under section 21a, upon the application of the trustee, is an entirely

distinct and independent proceeding from the ordinary bankrupt's examination held at the first meeting of creditors or at some adjournment thereof. * * * The examination of a witness by the trustee under section 21a is taken solely for his information, to enable him to act intelligently in the premises and to take such steps as may be necessary for the protection and preservation of the estate."

That the examination of the bankrupt ordered under section 21a is different from the examination before the referee at creditors' meetings is also the view of the text-writers. Collier on Bankruptcy (4th Ed.) p. 234, says:

"It should be noted, however, that while this subsection (21a) makes the bankrupt a compulsory witness as to his own 'acts, conduct or property,' by section 7 (9) he must also be ready to testify concerning the same things at the first meeting of creditors. * * * In effect, the only difference, as far as the bankrupt goes, is one of practice. Where first meetings are kept alive by continuances, as is customary, his examination can be had or resumed so long as the meeting lasts. If the meeting had been adjourned, an examination can, under section 7 (9), still be had at such times as the court shall order, or it can be required under the section now discussed. Clearly, therefore, the main purpose of section 21a is to authorize and regulate the examination of third parties, rather than that of the bankrupt. * * * Without the power to so examine, the remedy of the statute against preferences and fraudulent transfers would often be unavailing."

So, also, in Loveland's Bankruptcy (2d Ed.) p. 615, it is said:

"The language of these provisions is very general. They give the referee power to summon any person who could give evidence in a court of law. They authorize the examination of them upon all matters which are likely to arise in respect to the bankrupt or his property. The only limitation as to time within which this power may be exercised is that the estate shall be in process of administration in bankruptcy. The judge or referee may therefore summon a witness at any time after the commencement of proceedings until the estate is closed by order of court. The referee, of course, can only summon witnesses while the case is pending before him upon reference."

The construction thus placed on this section makes a complete system of the bankrupt law, enables courts to thwart fraud and fulfill the purpose of the law, gives effect to this clause, and gives to its words the same meaning as in other parts of the act. The act clearly makes no provision that the court's jurisdiction shall be divided into two periods, viz., a nonadministrative period prior to adjudication, and an administrative one after adjudication. On the contrary, the whole tenor of the act is to regard the time from the filing of the petition to the close of the proceeding as an administrative whole. Thus section 1, cl. 4, provides that the word "bankrupt" shall "include a person against whom an involuntary petition * * * has been filed, or who has filed a voluntary petition, or who has been adjudged a bankrupt"; clause 10, that the word "bankruptcy" "with reference to time, shall mean the date when the petition was filed." Moreover, the examination of the bankrupt in advance of adjudication is no new departure in bankruptcy administration. Act Aug. 19, 1841, c. 9, § 4, 5 Stat. 443, provided:

"And such bankrupt shall at all times be subject to examination, * * * and his acts and doings and his property and rights of property, which, in the judgment of such courts, are necessary and proper for the purposes of justice."

And in Ex parte Lee, Fed. Cas. No. 8,178 (a voluntary case), it was held by Judge Betts that both voluntary and involuntary bankrupts could be examined in advance of adjudication. He there says:

"It is said that Congress intended only that he should be subject to an examination after being declared a bankrupt. But in referring to another section of the act it will be found that he takes the name of bankrupt before he is pronounced so by the court. On filing their petitions they are deemed bankrupts, and that is the descriptio personæ."

Under Act March 2, 1867, c. 176, 14 Stat. 517, the examination was not deferred until after adjudication, but the court was authorized to "at all times require the examination of the bankrupt." And so, also, the word "administration" in the clause before us is in our judgment used in a broad sense as descriptive of the whole bankruptcy proceeding, rather than in the narrower, technical sense of that part of the administrative work which begins after adjudication. In other words, the administration which proceeds from adjudication is simply the continuation of that which preceded adjudication. This is most clearly implied in section 22, cl. "a," which provides:

"After a person has been adjudged a bankrupt, the judge may cause the trustee to proceed with the administration of the estate or may refer it."

Proceeding with an administration implies that administration has already begun. Moreover, since by section 64, cl. "b," the first item paid out of a bankrupt's estate is "the actual and necessary cost of preserving the estate subsequent to filing the petition," it is hard to say that the court, which was preserving and keeping intact the property prior to the appointment of a trustee, was not administering. The word "administer" means literally to minister to, to serve, and surely preliminary preservation, getting trace of assets, preventing concealed goods from being spirited away, in other words, preventing the scattering and dissipating of property, so that there may be an estate to sell and distribute, is the very gist of administration. To say that administration, the duty of the court to administer by conservation, does not begin until after adjudication, is to lose sight of the most effective scope of the court's jurisdiction. With adjudication and the selection by the creditors of a trustee the creditors assume charge. But before adjudication, and when creditors have no representative, the court is their representative, and is either by its own process or its own receiver administering for their benefit. We may rightfully use, of the administration of a bankrupt court, mutatis mutandis, the language of the Supreme Court of Alabama, in Martin v. Ellerbe's Adm'r, 70 Ala. 326, and say:

"The term 'administration' includes more than the collection of assets and the payment of debts and legacies and distribution to the next of kin, and involves anything that may be done rightfully in the preservation of the assets of the estate and which may be done legally by the administrator in his dealings with creditors, distributees, or legatees, or which may be done by them in securing their rights."

Holding, then, that an estate in bankruptcy is aptly described as "in process of administration under this act" from the time the clerk files a petition in bankruptcy, which is "a caveat to all the world and in effect an attachment and injunction," I am of opinion the order of reference in this case was within the statutory powers of the court.

(172 Fed. 841.)

MISSOURI PAC. RY. CO. v. CASTLE.

(Circuit Court of Appeals, Eighth Circuit. August 9, 1909.)

No. 2,995.

1. COMMERCE (§ 10*)—INTERSTATE RAILROADS—FELLOW SERVANTS—STATE STATUTES LIMITING DOCTRINE.

Laws Neb. 1907, p. 191, c. 48, § 1, which provides, inter alia, that railroad companies operating trains within the state shall be liable for injuries to employés resulting from the negligence of other employés, is comprehensive in its terms, and applies to railroads doing an interstate business, and governs the liability of such companies to employés operating trains engaged in interstate commerce in the absence of valid legislation by Congress covering such liability.

[Ed. Note.—For other cases, see Commerce, Cent. Dig. § 8; Dec. Dig. § 10.*]

2. CONSTITUTIONAL LAW (§§ 245, 249*)—EQUAL PROTECTION OF LAWS—STATUTES ESTABLISHING DOCTRINE OF COMPARATIVE NEGLIGENCE IN ACTIONS AGAINST RAILROADS.

Laws Neb. 1907, p. 192, c. 48, § 2, which provides for the application of the rule of comparative negligence in actions by employés against railroad companies for personal injuries, and also that "all questions of negligence and contributory negligence shall be for the jury," is within the constitutional power of the Legislature, and does not deprive the defendant in such cases of the equal protection of the laws.

[Ed. Note.—For other cases, see Constitutional Law, Cent. Dig. §§ 702, 710; Dec. Dig. §§ 245, 249.*]

3. COURTS (§ 352*)—RECEPTION OF EVIDENCE—OFFER.

Under the rule of the federal courts, an offer to prove certain facts may be made without first propounding a question to a witness as a basis for such offer, and, if the offer is rejected, error may be assigned thereon where there is nothing to indicate that the offer was not made in good faith, or that the proof would not have been produced if permitted.

[Ed. Note.—For other cases, see Courts, Dec. Dig. § 352.*]

4. WITNESSES (§ 211*)—COMPETENCY—PRIVILEGED COMMUNICATIONS.

Where plaintiff's leg was crushed by being run over by a car of one of defendant's railroad trains, which facts were known and not in dispute, a statement made by plaintiff to defendant's physician who came to treat his injury as to the manner in which his foot came to be caught under the wheel was not a privileged communication within Civ. Code Neb. § 333 (Comp. St. Neb. 1901, § 5907), which prohibits a physician from disclosing "any confidential communication properly intrusted to him in his professional capacity and necessary and proper to enable him to discharge the functions of his office," having no relation to the treatment of the injury, and the exclusion of such statement when offered in evidence was error.[1]

In Error to the Circuit Court of the United States for the District of Nebraska.

James W. Orr (George G. Orr and B. P. Waggener, on the brief), for plaintiff in error.

T. J. Mahoney (J. A. C. Kennedy, on the brief), for defendant in error.

[1] See note at end of case.

Before HOOK and ADAMS, Circuit Judges, and CARLAND, District Judge.

CARLAND, District Judge. Ozro Castle brought this suit against the Missouri Pacific Railway Company to recover damages for personal injuries received by him on October 2, 1907, while in the employ of the company at Auburn, Neb. It is alleged in the petition that said injuries resulted from the negligence of fellow servants. The plaintiff recovered a verdict, and the defendant has removed the case to this court by writ of error. It appeared at the trial that the train upon which plaintiff was employed at the time he was injured started October 1, 1907, from St. Joseph, Mo., for Auburn, Neb., via Atchison, Kan., and was engaged in interstate commerce. Plaintiff based his cause of action upon section 1, c. 48, p. 191, Laws Neb. 1907, which was in force on the date of the injury. Said section reads as follows:

"Section 1 (Railway Company's Liability to injured employé). That every railway company operating a railway engine, car, or train, in the state of Nebraska, shall be liable to any of its employés who at the time of the injury are engaged in construction or repair work, or in the use and operation of any engine, car, or train, for said company, or, in case of his death to his personal representatives for the benefit of his widow and children, if any, if none, then to his parents, if none, then to his next of kin dependent upon him, for all damages which may result from negligence of any of its officers, agents, or employés, or by reason of any defects or insufficiency, due to its negligence, in its cars, engines, appliances, machinery, track, roadbed, ways or works."

It is contended that said section does not include a railway company engaged in interstate commerce in the state of Nebraska, but the language of the section clearly includes all railroads operated in the state. It is also contended that the section above quoted is inoperative so far as employés of the defendant engaged in interstate commerce are concerned by reason of the act of Congress approved June 11, 1906 (Act June 11, 1906, c. 3073, 34 Stat. 232 [U. S. Comp. St. Supp. 1907, p. 891]). As this last named act was declared to be unconstitutional in Employer's Liability Cases, 207 U. S. 463, 28 Sup. Ct. 141, 52 L. Ed. 297, it must be considered as never having existed for any purpose. Therefore Congress had not legislated upon the subject contained in section 1 of the Nebraska law above quoted at the time that plaintiff received his injuries. In the absence of legislation by Congress, it was competent for the state to legislate. Chicago, Milwaukee, etc., Ry. Co. v. Solan, 169 U. S. 133, 18 Sup. Ct. 289, 42 L. Ed. 688.

It is further contended that section 2, c. 48, p. 192, Laws Neb. 1907, is repugnant to article 14 of the admendments to the Constitution of the United States, in that it abridges the privileges and immunities of a citizen of the United States, deprives the defendant company of its property without due process of law, and denies to it the equal protection of the laws. The section referred to reads as follows:

"Sec. 2 (Same; contributory negligence). That in all actions hereafter brought against any railway company to recover damages for personal injuries to any employé or when such injuries have resulted in his death, the fact that such employé may have been guilty of contributory negligence shall not bar a recovery when his contributory negligence was slight and that of the employer was gross in comparison but damages shall be diminished by the jury

in proportion to the amount of negligence attributable to such employé, all questions of negligence and contributory negligence shall be for the jury."

Conceding but not deciding that said section would be binding upon the federal courts sitting in Nebraska, it has no such effect as is claimed by defendant. In view of the history of trial by jury and the distribution of governmental powers by the Constitution of Nebraska, we cannot presume for a moment that the Legislature had reference to any questions except those of fact, when it used the language: "All questions of negligence and contributory negligence shall be for the jury." As thus interpreted the language quoted is simply declaratory of existing law. Kiley v. Chicago, M. & St. P. Ry. Co. (Wis. 1909) 119 N. W. 309.

It is only when in the opinion of the court there is no question of negligence or contributory negligence as a matter of fact that cases are taken from the jury, under existing practice. In so far as the statute creates the rule of comparative negligence, it in no wise tends to destroy any of the constitutional rights of defendant. The rule of comparative negligence was adopted by some courts of their own motion, and not until it was demonstrated that the rule is impracticable in cases tried to a jury was it discarded, as in theory it is a just rule and is continually enforced by the courts of admiralty, where the trained minds of judges are able to compare the faults of vessels in collision. It is not a question here, however, whether the rule ought to be adopted, but whether the Legislature of Nebraska had the power so to do. Of this we have no question. If the Legislature has the power to take away the defense that the injury sued for was committed by fellow servants, it certainly has the right to modify the rule that any negligence of a plaintiff directly contributing to his injury will defeat his recovery. Missouri Pacific Railway Co. v. Mackey, 127 U. S. 205, 8 Sup. Ct. 1161, 32 L. Ed. 107; Minneapolis & St. Louis Railway Co. v. Herrick, 127 U. S. 210, 8 Sup. Ct. 1176, 32 L. Ed. 109; Tullis v. Railway Co., 175 U. S. 348, 20 Sup. Ct. 136, 44 L. Ed. 192; Chicago, K. & W. R. Co. v. Pontius, 157 U. S. 209, 15 Sup. Ct. 585, 39 L. Ed. 675; Peirce v. Van Dusen, 78 Fed. 693, 24 C. C. A. 280, 69 L. R. A. 705; Kiley v. Chicago, M. & St. P. Railway Co. (Wis.) 119 N. W. 309.

As the statute only acts prospectively, defendant cannot say that it takes away any vested right. The importance of the question as to whether section 2, above quoted, is binding upon the federal courts sitting in Nebraska, so far as the rule of comparative negligence is concerned, is largely minimized by section 2 of the act of Congress approved April 22, 1908 (Act April 22, 1908, c. 149, 35 Stat. 65), which establishes practically the same rule. At the trial the defendant called as a witness in its own behalf, Dr. W. H. Ramsey, who being examined in chief testified as follows:

"Q. What is your full name? A. W. H. Ramsey.

"Q. What is your profession? A. Physician and surgeon.

"Q. What position, if any, do you hold with the Missouri Pacific Railway Company? A. I am one of the surgeons.

"Q. Did you hold the same position in October of last year? A. Yes, sir.

"Q. Do you remember of an accident happening to Mr. Castle, the plaintiff in this case? A. Yes, sir.

"Q. Did you examine his injury? A. Yes, sir.
"Q. Describe to the jury in what manner he was injured.
"Mr. Mahoney: Before that question is answered, if your honor please, I desire to ask the witness a question or two in respect to his relation to the case, bearing upon his competency.
"By Mr. Mahoney:
"Q. Doctor, where did you examine him? A. At the hospital.
"Q. In Omaha? A. Yes, sir.
"Q. Did you treat him? A. He arrived in the evening, and, no; I hadn't treated him before that.
"Q. But did you examine him for the purpose of treating him? A. Yes, sir.
"Q. What examination you made was for that purpose? A. Yes, sir.
"Q. The examination you made was for the purpose of diagnosing the case to become informed so you could properly treat him? A. Yes, sir.
"Q. In the discharge of your duties as a surgeon? A. Yes, sir."

Upon objection of Mr. Mahoney, the above question and an offer made thereon was excluded, and, without asking any other question, counsel for defendant then made the following offer:

"Defendant also offers to prove by this witness that he had a conversation with the plaintiff in which the plaintiff told him that the injury was sustained by plaintiff by having his foot slip off the brakebeam and onto the 'T' rail of the track and one of the car wheels of the first car passing over his foot.
"Mr. Mahoney: That is objected to for the reason that it is incompetent, and for the reason that the witness is incompetent to testify respecting the information acquired by him under the circumstances which he has disclosed, such testimony being forbidden by statute, and the witness being made incompetent to testify thereto, for the further reason that there has been no foundation laid for the making of such an offer."

This objection was sustained by the court and the ruling excepted to by counsel for defendant. It is claimed that no error can be assigned here upon the above ruling of the court for the reason that no question was propounded by counsel upon which to base the offer and cases are cited in support of this contention, but we think the rule established in the federal courts is as stated by Chief Justice Waite in Scotland County v. Hill, 112 U. S. 186, 5 Sup. Ct. 95, 28 L. Ed. 692, as follows:

"It is claimed, however, that error cannot be assigned here on the exception to the exclusion of the oral proof, because the record does not show that any witness was actually called to the stand to give the evidence, or that any one was present who could be called for that purpose, if the court had decided in favor of admitting it, and we are referred to the cases of Robinson v. State, 1 Lea (Tenn.) 673, and Eschbach v. Hurtt, 47 Md. 61, 66, in support of that proposition. Those cases do undoubtedly hold that error cannot be assigned on such a ruling unless it appears that the offer was made in good faith, and this is in reality all they do decide. If the trial court has doubts about the good faith of an offer of testimony, it can insist on the production of the witness, and upon some attempt to make the proof before it rejects the offer; but, if it does reject it, and allows a bill of exceptions which shows that the offer was actually made and refused, and there is nothing else in the record to indicate bad faith, an appellate court must assume that the proof could have been made, and govern itself accordingly."

Under the above rule we must treat the offer as made in good faith, and presume that the testimony offered would have been produced if counsel had been permitted to do so. Whether or not counsel for defendant ought to have been permitted to show the facts contained in

his offer depends upon the true construction of section 333 of the Civil Code of Nebraska, which is as follows:

"No practicing attorney, counsellor, physician, surgeon, minister of the gospel, or priest of any denomination shall be allowed, in giving testimony, to disclose any confidential communication, properly intrusted to him in his professional capacity, and necessary and proper to enable him to discharge the functions of his office according to the usual course of practice or discipline."

The above section of the Civil Code of Nebraska was before this court in the case of Union Pacific Railway Co. v. Thomas, 152 Fed. 365, 81 C. C. A. 491. It was there said:

"The essential elements of a privileged or a confidential communication under the Nebraska statute are: (1) The relation of physician and patient; (2) information acquired during this relation; and (3) the necessity and propriety of the information to enable the physician to treat the patient skillfully in his professional capacity."

While the offer itself does not disclose that the statement was made to the witness under the same circumstances as the information sought by the previous question and offer which were excluded, in fairness, it will be so treated. The question then is narrowed down to this. Was the fact that plaintiff told the witness that he was injured by having his foot slip off the brake beam onto the "T" rail of the track and one of the car wheels of the first car passing over his foot a confidential communication properly intrusted to him in his professional capacity and necessary and proper to enable him to discharge the functions of his office according to the usual course of practice or discipline.

It is obvious that the admissibility of evidence sought to be excluded under the statute, above quoted, must be determined by the facts in each case. In the Thomas Case above referred to the injuries were internal. From what particular disease the plaintiff was suffering, and what was the proximate cause thereof, was in doubt. Under such a state of facts answers to questions as to how the plaintiff was injured, and as to what physical injuries she received were clearly necessary to enable the physician to prescribe and hence, were privileged. In the case at bar there was beyond question a crushed right leg about four inches above the ankle. The injury beyond question was caused by one of the defendant's cars passing over plaintiff's leg. Whether the injury was caused by plaintiff's or defendant's negligence was the pivotal question in the case. It is impossible to imagine anything that Castle, the injured person, could say to the physician in reference to the cause of the injury that would in any way throw any light upon the manner of treating the same. How the leg came to be crushed was for the purpose of treatment absolutely immaterial. What plaintiff told the witness was of no assistance whatever to enable him to discharge the functions of his office.

The statute is in derogation of the common law, and often excludes the best evidence. It should not, therefore, be extended to matters of evidence not coming clearly within its provisions as the object and purpose of all trials is the development of the true facts in each case. We find no cases which under similar circumstances have held testimony such as was offered in the present case inadmissible, but, on the contrary, we find the following decisions which hold such evidence to

be admissible under similar or like statutes. Smith v. John L. Roper Lumber Co., 147 N. C. 62, 60 S. E. 717, 125 Am. St. Rep. 535; Linz v. Mass. Mut. Life Ins. Co., 8 Mo. App. 365; Green v. Terminal Railroad Association, 211 Mo. 18, 109 S. W. 715; Griebel v. Brooklyn Heights Railroad Co., 68 App. Div. 204, 74 N. Y. Supp. 126; Travis v. Hahn, 119 App. Div. 138, 103 N. Y. Supp. 973; Brown v. Rome, W. & O. R. Co., 45 Hun (N. Y.) 439; De Jong v. Erie Railroad Co., 43 App. Div. 427, 60 N. Y. Supp. 125; Kansas City, Fort Scott & Memphis Railway v. Murray, 55 Kan. 336, 40 Pac. 646; Collins v. Mack, 31 Ark. 684; Griffiths v. Metropolitan St. Railway Co., 171 N. Y. 106, 63 N. E. 808; Campau v. North, 39 Mich. 606, 33 Am. Rep. 433.

We think the court erred in sustaining the objection to the testimony offered, and for such error we reverse the judgment and grant a new trial; and it is so ordered.

NOTE.

Competency of Physicians or Surgeons to Testify as to Communications by Patients, or as to Information Acquired Professionally, as Dependent on Subject-Matter.

I. In General.

[a] (Ind. 1905) Burns' Ann. St. 1901, § 505, prohibiting physicians from testifying to confidential communications between themselves and their patients, does not forbid the testimony of a physician to the fact of his employment by a patient. Judgment (App. 1904) 72 N. E. 652, reversed.—Haughton v. Ætna Life Ins. Co., 73 N. E. 592.

[b] (Iowa, 1882) In an action for breach of promise, a physician called for the defense was asked if, at a certain time previous to the trial, plaintiff had consulted him as to getting rid of a child with which she was pregnant. *Held*, there being no evidence of unlawful purpose, that the communication was privileged.—Guptill v. Verback, 58 Iowa, 98, 12 N. W. 125.

[c] (Iowa, 1900) Code, § 4608, declaring that no practicing physician shall be allowed to give testimony to disclose a confidential communication properly intrusted to him in his professional capacity, does not prevent him from testifying that he was consulted by deceased, and that he prescribed for him. —Nelson v. Nederland Life Ins. Co., 81 N. W. 807.

[d] (Kan. 1895) Statements made by an injured employé to a surgeon called to attend him as to the position of the employé immediately preceding the accident are not privileged.—Kansas City, Ft. S. & M. R. Co. v. Muncy 55 Kan. 336, 40 Pac. 646.

[e] (Mich. 1891) It is proper for plaintiff's physician to testify that when called in professionally he was told by plaintiff that she had sued defendant, and would want him as a witness, since such testimony has no reference to plaintiff's condition.—Cooley v. Foltz, 85 Mich. 47, 48 N. W. 176.

[f] (Mich. 1893) In an action for a personal injury received October 23d, defendant claimed that the injury was due to an accident to plaintiff August 9th, and a physician swore that he attended plaintiff for the earlier injury from August 10th to September 3d. *Held*, that defendant was entitled to ask the physician whether he discharged plaintiff from treatment on September 3d, as the fact of treatment by a physician is not a matter of privilege.—Dittrich v. City of Detroit, 98 Mich. 245, 57 N. W. 125.

[g] (Minn. 1903) A physician may be called upon to testify to the fact that he has attended a certain person as his patient, and the number of visits.—Price v. Standard Life & Accident Ins. Co., 95 N. W. 1118.

[h] (Mo. 1904) A statement by plaintiff, in a suit for injuries, to her physician, with reference to plaintiff's bringing suit for damages, that if she should do so they would be able to fix up the physician's bill for services, was not within the provisions of a statute rendering the physician incompetent to tes-

tify to information obtained by him while treating his patient in a professional capacity.—Holloway v. Kansas City, 82 S. W. 89.

[i] (Neb. 1902) Testimony of physician that he has attended a patient, and as to the number of his professional visits, is not privileged, under Code Civ. Proc. § 338.—Sovereign Camp of Woodmen of the World v. Grandon, 89 N. W. 448.

[j] (N. Y. 1886) Under Code, §§ 834, 836, prohibiting a physician from disclosing information acquired in attending a patient in a professional capacity and necessary to enable him to act, a consulting physician may not testify in proceedings for the probate of the patient's will. Nor is the statute limited to the prohibition of disclosures of information of a confidential nature only.—Reinham v. Dennin, 18 Abb. N. C. 101; Renihan v. Same, 103 N. Y. 573, 9 N. E. 320, 57 Am. Rep. 770.

[k] (N. Y. 1889) In an action on a life insurance policy, defendant may prove by physicians that they attended the insured professionally, though information acquired in such attendance cannot be disclosed.—Numrich v. Supreme Lodge Knights and Ladies of Honor (City Ct. N. Y.) 3 N. Y. Supp. 552.

[l] (N. Y. 1891) Upon issues as to testamentary capacity and undue influence, the opinion of the physician attending testator, derived from observations, while so acting, as to whether testator "could correctly and intelligently comprehend the nature and condition and value of his property," is inadmissible.—Van Orman v. Van Orman, 58 Hun, 606, 11 N. Y. Supp. 931.

[m] (N. Y. 1891) On a reference of a claim against the estate of an intestate for services as a professional nurse, which was disputed by the administrator, physicians who had attended deceased testified that the claimant acted as his nurse, and that their knowledge of the fact was derived from having seen her acting in that capacity, and from statements to that effect made to them by the intestate. *Held*, that such testimony was admissible.—Pandjiris v. McQueen, 59 Hun, 625, 13 N. Y. Supp. 705.

[n] (N. Y. 1903) The testimony of a physician, limited to the identification of plaintiff, to the fact that he had treated her, together with the place and length of time of such treatment, did not disclose, or have any tendency to disclose, any communication plaintiff made to the physician, or he to her, within Code Civ. Proc. § 834, prohibiting a physician from disclosing professional information acquired in attending a patient.—Deutschmann v. Third Ave. R. Co., 87 App. Div. 503, 84 N. Y. Supp. 887.

[o] (N. Y. 1904) Code Civ. Proc. § 834, excluding from evidence privileged communications between physician and patient, does not prevent a physician from testifying that he attended a person professionally, as to how long the person was confined to his house, and the number and dates of his calls. Judgment, 87 N. Y. Supp. 980, reversed.—Becker v. Metropolitan Life Ins. Co., 99 App. Div. 5, 90 N. Y. Supp. 1007.

II. NECESSITY TO ENABLE TREATMENT.

[a] (Ark. 1877) The admissions of a patient, to a physician, while the latter was in attendance during her illness, and which were not necessary to enable him to prescribe for her, or do any act as a surgeon, may be proved by the physician.—Collins v. Mack, 31 Ark. 684.

[b] (Cal. 1897) Statement of witness that he received no information about testatrix except as a physician to enable him to take care of her, standing alone, justifies the inference that this knowledge was necessary to enable him "to prescribe or act" for her, so as to render him incompetent under Code Civ. Proc. § 1881, to testify in regard to it.—In re Redfield's Estate (Cal.) 116 Cal. 637, 48 Pac. 794.

[c] (Cal. 1901) Where, in a will contest, the testimony of attending physicians of the testatrix as to her mental condition was not founded on information acquired in attending her which was necessary to enable them to prescribe or act for her, it was not barred by Code Civ. Proc. § 1881, which precludes a physician from being examined only as to such information, and was therefore properly admitted.—In re Black's Estate, 132 Cal. 392, 64 Pac. 695.

[d] (Cal. 1905) Under the statute forbidding a physician to be examined as to any information acquired in attending his patient, the acquisition of which is necessary in order to enable him to prescribe or act for the patient, all

statements made by a patient to his physician while the latter is attending the former in that capacity, for the purpose of determining his condition, are privileged, although they have nothing to do with the patient's treatment, or the determination of his injuries, but relate to the way in which the injuries occurred.—McRae v. Erickson, 1 Cal. App. 326, 82 Pac. 209.

[e] (Mich. 1878) In an action for damages for injuries caused by the defendant's violence, *held*, that the testimony of the plaintiff's physician, that the plaintiff had admitted to him that the injury had existed before the act of violence, could not, under Comp. Laws, § 5943, be excluded, if it did not appear that the patient's disclosure was necessary to enable him to prescribe. —Campau v. North, 39 Mich. 606, 33 Am. Rep. 433.

[f] (Mich. 1890) Evidence of a doctor that he attended a certain person professionally, as to the number and dates of his visits, and that he was the family physician of such person, is not within the prohibition of How. St. § 7516, providing that a physician shall not disclose any information which he may have acquired in attending any patient in his professional capacity, and which was necessary to enable him to prescribe for such patient as a physician.—Breisenmeister v. Supreme Lodge K. P. of the World, 81 Mich. 525, 45 N. W. 977.

[g] (Mich. 1906) Under Comp. Laws, § 10,181, providing that no physician shall be allowed to disclose any information acquired in attending any patient in his professional capacity and necessary to treat the patient, a physician is not competent to testify in an action on a life policy, to the effect that the mother and two sisters of the insured had died before the making of the application averring that none of her parents or brothers or sisters had consumption, where the physician acquired his information in his professional capacity.—Krapp v. Metropolitan Life Ins. Co., 143 Mich. 369, 106 N. W. 1107.

[h] (Mo. 1885) Information given to a physician as such to enable him to prescribe intelligently is privileged.—Norton v. City of Moberly, 18 Mo. App. 457.

[i] (Mo. 1908) Rev. St. 1899, § 4659, subd. 5 (Ann. St. 1906, p. 2540), providing that a physician or surgeon shall be incompetent to testify concerning information acquired from a patient while attending him professionally, and necessary to enable him to prescribe for such patient, though creating a privilege unknown to the common law, is not to be strictly construed, but should be so construed as to further its purpose, which is to invite confidence between physician and patient and to prevent a breach of such confidence, and hence, where a person injured on a railroad was removed to a hospital with a crushed leg, the treatment of which was obvious, necessitating no information as to the circumstances attending the accident, testimony of attending surgeons as to a statement of the patient relative to his position when injured was admissible in an action by him against the railroad for the injury to prove that, when struck by the cars, he was not in the open where he could be seen, but that he was concealed between standing cars.—Green v. Terminal R. Ass'n of St. Louis, 211 Mo. 18, 109 S. W. 715.

[j] (N. Y. 1887) In an action for damages for personal injuries to plaintiff at a railroad crossing, a physician who attended plaintiff was asked by defendant whether during one of his professional visits plaintiff stated to witness that when approaching the crossing on the occasion of the accident he heard persons hallooing to him, and saw a man swing his hat, but did not think where he was until the train was almost upon him. *Held*, that it was error to exclude the evidence under Code Civ. Proc. § 834, forbidding a physician to disclose information "acquired in attending a patient in a professional capacity, and which was necessary to enable him to act in that capacity." —Brown v. Rome, W. & O. R. Co., 45 Hun, 439.

[k] (N. Y. 1887) On the probate of a will the family physician is competent to testify to the facts and events not connected with physical complaints, and which were not obtained for the purpose of treating a patient.—In re Boury's Will, 8 N. Y. St. Rep. 809.

[l] (N. Y. 1889) The question of testator's belief as to contestant's insanity being a material matter to explain his testamentary provisions in her behalf, his conversations with the physicians on that subject are admissible, and do not come within Code Civ. Proc. § 834, as that applies only to commu-

nications necessarily made to a physician by a patient in the course of professional treatment.—Hoyt v. Hoyt, 112 N. Y. 493, 20 N. E. 402, affirming (1887) 9 N. Y. St. Rep. 731.

[m] (N. Y. 1890) On proceedings to probate a will, evidence of a physician as to a statement made to him by decedent, and which he testifies was not necessary to enable him to act in his professional capacity, is admissible.—In re Halsey's Estate, 2 Con. Sur. 220, 9 N. Y. Supp. 441.

[n] (N. Y. 1892) Code Civ. Proc. § 834, declaring that a physician shall not be allowed to disclose as a witness "any information which he acquired in attending a patient in a professional capacity, and which was necessary to enable him to act in that capacity," does not prohibit a physician from testifying that he attended a person in his professional capacity, and that the patient was sick, or from giving the number of times and the dates when the patient applied to him, and the places where he attended him, for the purpose of showing that the patient was not in good health at a certain time.—Patten v. United Life & Accident Ins. Ass'n, 133 N. Y. 450, 31 N. E. 342.

[o] (N. Y. 1899) The communications of a patient to his physician, which are privileged by Code Civ. Proc. § 834, providing that the physician shall not disclose information acquired "in a professional capacity, and which was necessary to enable him to act in that capacity," extends only to those which are material or useful to the physician in the treatment of the case.—De Jong v. Erie R. Co., 43 App. Div. 427, 60 N. Y. Supp. 125.

[p] (N. Y. 1902) Under Code Civ. Proc. § 834, providing that no physician shall disclose any information which he acquired in attending a patient which was necessary to enable him to act in his professional capacity, where plaintiff claimed that he was injured by driving into a hole in the street near defendant's railroad track, the surgeon who attended him should be permitted to answer the question, "Did the plaintiff state to you in the hospital ambulance that he had slipped from his wagon while trying to get onto it, and that the wagon ran over him?" since such statement could have no bearing on the treatment of plaintiff by such surgeon.—Griebel v. Brooklyn Heights R. Co., 68 App. Div. 204, 74 N. Y. Supp. 126.

[q] (N. Y. 1905) Under Code Civ. Proc. § 834, providing that a physician shall not be allowed to disclose information which he acquired in attending a patient in a professional capacity and which was necessary to enable him to act in that capacity, admissions made by an injured person to her physician as to the manner in which the injuries were caused are not privileged, although they were made during the course of an examination of the injured person by the physician, unless it appears that the information so imparted to the physician was necessary to enable him to act in that capacity.—Benjamin v. Village of Tupper Lake, 110 App. Div. 426, 97 N. Y. Supp. 512.

[r] (N. Y. 1907) Code Civ. Proc. § 834, providing that a physician shall not be allowed to disclose information which he acquired in attending a patient in a professional capacity, "and which was necessary to enable him to act in that capacity," does not prohibit him from testifying that a patient whose hand he was treating told him that she carelessly got her hand into a mangle, since such information was not necessary to enable him to treat the hand.—Travis v. Haan, 119 App. Div. 138, 103 N. Y. Supp. 973.

[s] (N. C. 1908) The limitation that the communication, to be privileged, must be necessary to enable the physician to prescribe, etc., must be given effect; and in an action for personal injuries, where it appeared that, when asked how he received the injury, plaintiff replied that he was raising the engine with a jackscrew, which he kicked out, causing the engine to roll back on his arm, etc., the information given was not such as was necessary to enable the physician to prescribe or act for plaintiff, and was not privileged.—Smith v. John L. Roper Lumber Co., 147 N. C. 62, 60 S. E. 717.

III. Physical Condition and Nature of Disease or Affliction.

[a] (D. C. 1908) In view of section 1073, Code D. C. (31 Stat. 1358, c. 854), prohibiting physicians from disclosing any information, confidential in its nature, which they shall have acquired in attending a patient, without the consent of the patient or his legal representative, it is not error for the trial court, in an action on a policy of life insurance, to refuse to allow a physician

who has testified generally as to the health of his patient during the period he had been her physician to answer questions propounded by defendant's counsel in regard to the nature of the disease with which the deceased suffered, its duration, and the cause of death.—Prudential Ins. Co. of America v. Lear, 31 App. D. C. 184.

[b] (Ga. 1842) The declarations of a sick negro to her physician are inadmissible in evidence, except as to the disease with which she was afflicted at the time of the conversation.—Brown v. Lester, Geo. Dec. 77, pt. 1.

[c] (Ind. 1887) Under Rev. St. 1881, § 497, subd. 4, making physicians incompetent to testify "as to matters communicated to them as such, by patients, in the course of their professional business," evidence of a physician, in an action to recover damages for personal injuries, that he visited the plaintiff and examined her as a patient, in his professional capacity, and that he found no evidence of any injury such as that complained of, is inadmissible, unless the plaintiff consents or otherwise waives the privilege granted by such section.—Williams v. Johnson, 112 Ind. 273, 13 N. E. 872.

[d] (Iowa, 1900) Under Code, § 4608, a physician cannot testify as to the nature of the disease with which the patient was afflicted, or whether he had advised the patient of its nature.—Nelson v. Nederland Life Ins. Co., 81 N. W. 807.

[e] (Iowa, 1904) A question put to a physician as to the condition of plaintiff at the time the witness attended him was objectionable, under the statute, though the testimony was sought to be elicited for the purpose of impeaching plaintiff as a witness.—Battis v. Chicago, R. I. & P. Ry. Co., 100 N. W. 543.

[f] (Mich. 1870) Under Comp. Laws, § 4323, forbidding a physician from disclosing any information which he may have acquired in attending a person in his professional capacity, a physician was not competent, in an action for divorce, to testify that the husband had a venereal disease, it not appearing that the physician had any information except such as he had acquired in a professional capacity.—Briggs v. Briggs, 20 Mich. 34.

[g] (Mich. 1882) In a chancery case, where testimony was taken before a commissioner, an attempt was made to impeach the character of one of the parties, and a physician testified that he had attended upon a woman who had a private disease, and who was said to have been employed in the family of this party. *Held*, that the physician grossly violated the rules of professional ethics, and Comp. Laws, § 5943, which prohibits physicians from revealing facts concerning their patients; that the commissioner should have refused to take testimony given in such plain violation of law.—Storrs v. Scougale, 48 Mich. 387, 12 N. W. 502.

[h] (Mich. 1887) In an action upon a life policy, deceased having stated in her application that she had been treated for typhoid fever by Dr. H., it was error to preclude Dr. H. from testifying as to whether he had treated her for typhoid fever, on the ground that it was a matter of privilege, on which the plaintiff could insist.—Brown v. Metropolitan Life Ins. Co., 65 Mich. 306, 32 N. W. 610, 8 Am. St. Rep. 894.

[i] (Mich. 1897) In an action for personal injuries, plaintiff's physician could not testify, over her objection, to what ailment he had treated her for prior to the accident; the communication being privileged, under How. Ann. St. § 7516.—Lammiman v. Detroit Citizens' St. Ry. Co., 71 N. W. 153.

[j] (Mich. 1899) Where assured states, in his application for insurance, that a certain physician treated him for a certain disease, and the latter testifies that all the information he had as to diseases of assured was obtained while acting as his physician, the physician's testimony as to treating assured for any other diseases than that stated is incompetent, under How. Ann. St. § 7516, prohibiting a physician from disclosing any information acquired while attending any patient and which was necessary to enable him to prescribe for such patient.—Jones v. Preferred Bankers' Life Assur. Co., 79 N. W. 204.

[k] (Mo. 1887) Rev. St. § 4017, makes a physician incompetent to testify "concerning any information which he may have acquired from any patient while attending him in a professional character, and which information was necessary to enable him to prescribe for such patient as a physician, or do any act for him as a surgeon." *Held* that, in an action for personal injuries caused

by a defective sidewalk, a physician who was called to treat plaintiff after the accident was incompetent to show that plaintiff had been drinking.—Kling v. City of Kansas, 27 Mo. App. 231.

[l] (Mo. 1900) Under Rev. St. 1899, § 4659, providing that a physician or surgeon shall be incompetent to testify concerning any information which he may have acquired from any patient while attending him in a professional character, which information was necessary to enable him to prescribe for such patient as a physician, a physician who had been called to attend plaintiff at the time of her injury cannot be asked what was the matter with her at that time.—James v. City of Kansas City, 85 Mo. App. 20.

[m] (Mo. 1905) In an action for injuries to an employé it is proper to exclude the testimony of plaintiff's physician as to the condition in which he found plaintiff soon after the injury, plaintiff claiming such knowledge of the witness to be privileged.—Lackland v. Lexington Coal Min. Co. (App.) 85 S. W. 397.

[n] (Mo. 1905) Under Rev. St. 1899, § 4659, providing that a physician or surgeon shall be incompetent to testify concerning any information which he may have acquired from a patient while attending him in a professional character, and which information was necessary to enable him to prescribe for the patient, in an action for personal injuries, it was proper to sustain an objection to a question put to a physician who had attended plaintiff as to what she told him concerning her condition and what disease he prescribed for.—Glasgow v. Metropolitan St. Ry. Co., 191 Mo. 347, 89 S. W. 915.

[o] (N. Y. 1859) Testimony of a physician as to the nature of his patient's disease, and its mode of treatment, introduced to prove the value of his services, is not incompetent as involving a disclosure of confidential communications.—Kendall v. Grey, 2 Hilt. 300.

[p] (N. Y. 1877) A physician cannot testify as to the condition of deceased from information acquired upon examination necessary to enable the physician to prescribe for him.—Dilleber v. Home Life Ins. Co., 69 N. Y. 256, 25 Am. Rep. 182.

[q] (N. Y. 1887) Under Code Civ. Proc. § 834, providing that a physician "shall not be allowed to disclose any information which he acquired in attending a patient in a professional capacity, and which was necessary to enable him to act in that capacity," the affidavit of the physician of a person who is charged with being an habitual drunkard cannot be read in support of an application for the appointment of a committee.—In re Hoyt, 20 Abb. N. C. 162.

[r] (N. Y. 1888) In an action for personal injuries necessitating the amputation of plaintiff's leg, the question asked the physician who performed the operation "What was the condition of plaintiff's leg at that time?" was properly excluded.—Jones v. Brooklyn, B. & W. E. R. Co. (City Ct. Brook.) 3 N. Y. Supp. 253, judgment affirmed (1890) 121 N. Y. 683, 24 N. E. 1098.

[s] (N. Y. 1890) A physician examined as a judgment debtor in supplementary proceedings cannot be required to deliver up to the receiver his original books of account, containing information received while attending his patients, showing the nature of their maladies, under Code Civ. Proc. § 834, forbidding physicians to make such disclosures; a list of the accounts having been already furnished the receiver.—Kelly v. Levy (City Ct. N. Y.) 8 N. Y. Supp. 849.

[t] (N. Y. 1891) The physician who attended testator was competent to testify as to his condition at the time of a certain transaction, where the physician further stated that the information which he obtained while attending testator was not such as was necessary to enable him to act professionally, and that testator's condition was such that any person of ordinary intelligence could have understood it.—Herrington v. Winn, 60 Hun, 235, 14 N. Y. Supp. 612, 20 Civ. Proc. R. 326.

[u] (N. Y. 1904) A few months after insured had represented in her application that she was not pregnant, she gave birth to a stillborn child. In an action on the policy the physician who attended assured testified that whatever he learned, he learned in his professional capacity to enable him to treat the case. *Held* that, though he also testified that he could diagnose the case without seeing the child, he could not testify as to what period of gestation

had elapsed before the birth of the child.—Van Bergen v. Catholic Relief & Beneficiary Ass'n, 99 App. Div. 72, 91 N. Y. Supp. 362.

IV. MENTAL CAPACITY OR CONDITION.

[a] (Cal. 1901) Under Code Civ. Proc. § 1881, providing that a physician cannot be examined as a witness in a civil action without the consent of his patient as to any information acquired in attending the patient, a physician called as a witness by the contestants of the patient's will cannot answer questions based on information gained while attending the testator, tending to show that his patient had not mental capacity to make a will at the time a codicil was executed, though he acted as scrivener in drawing the original will.—In re Nelson's Estate, 132 Cal. 182, 64 Pac. 294.

[b] (Cal. 1909) Under Code Civ. Proc. § 1881, subd. 4, a physician who had attended testator professionally, was incompetent, in the contest of testator's will, to testify as to the nature of the disease from which testator was suffering, its duration, whether testator was rational, and whether he had sufficient mental capacity to make a will; all the information being acquired in attending testator in his professional capacity.—In re Budan's Estate, 104 Pac. 442.

[c] (Ind. 1904) Where a statute disqualified physicians from testifying as to any matter communicated to them by patients in the course of their professional business, a physician who attended testator in his last illness was disqualified from testifying in regard to communications made to him by his patient, or facts learned by him in the course of his treatment, in a will contest between testator's heirs on an issue of testamentary capacity.—Towles v. McCurdy, 71 N. E. 129.

[d] (Iowa, 1900) In an action between appointees of a decedent as beneficiaries of an insurance policy, decedent's physician cannot be examined as to communications made by him as to his mental condition, since Code, § 4608, makes such communications privileged.—Shuman v. Supreme Lodge Knights of Honor, 81 N. W. 717.

[e] (Iowa, 1904) Code, § 4608, provides that no practicing physician shall be allowed to disclose any confidential communication properly intrusted to him in his professional capacity, and necessary and proper to enable him to discharge the functions of his office. *Held* that, in an action for injuries, an objection to a question put to a physician, who had attended plaintiff, as to whether he found plaintiff conscious or unconscious at the time he attended him, and whether plaintiff talked to persons in an intelligent way, was properly sustained.—Battis v. Chicago, R. I. & P. Ry. Co., 100 N. W. 543.

[f] (N. Y. 1887) The testimony of a testatrix's physician is incompetent on the question of her testamentary capacity.—In re Hannah, 11 N. Y. St. Rep. 807.

[g] (N. Y. 1906) In proceedings to revoke the probate of a will on the ground that testatrix was mentally incompetent, petitioner was permitted to prove by physicians who had attended the mother and brother of testatrix in a professional capacity, and whose knowledge was obtained by attending such persons, that both the mother and the brother had been afflicted with general paresis. *Held* that, under Code Civ. Proc. §§ 834, 836, the testimony was privileged; the fact that it related to patients not parties to the proceedings and who were dead at the time not taking it out of the prohibition of the statute. Order (1905) 100 App. Div. 512, 91 N. Y. Supp. 1104, reversed.—In re Myer's Will, 184 N. Y. 54, 76 N. E. 920, 35 Civ. Proc. R. 329.

[h] (N. Y. 1906) Under Code Civ. Proc. § 834, prohibiting a physician from disclosing any information acquired in attending a patient in a professional capacity, a physician who attended a testator in a professional capacity is not competent to testify in proceedings for the probate of his will on the question of the mental capacity of the testator.—In re Preston's Will, 113 App. Div. 732, 99 N. Y. Supp. 312; Wells v. Preston, Id.

[i] (Utah, 1903) Under Rev. St. Utah 1898, § 3414, subd. 4, providing that a physician or surgeon cannot, without the consent of his patient, be examined in a civil action as to any information acquired in attending the patient which was necessary to enable him to prescribe or act for the patient, physicians who attended testator before his death are disqualified from expressing,

in a contest over testator's will, their opinion of his sanity at the time of its execution.—In re Van Alstine's Estate, 26 Utah, 193, 72 Pac. 942; Ewing v. Van Alstine, Id.

V. CAUSE OF INJURIES OR DEATH.

[a] (U. S. 1885) Statements in a proof of death as to the previous complaints and ailments of the insured, made by his physician, are privileged communications within the meaning of the Indiana statute, and not admissible to show that the answers made to certain questions in the application for insurance were false.—Dreier v. Continental Life Ins. Co. (C. C.) 24 Fed. 670.

[b] (Ind. 1890) A physician who dresses the wounds of a man injured by an accident cannot testify as to statements as to the cause of the accident, made to him by his patient while being so treated.—Pennsylvania Co. v. Marion, 123 Ind. 415, 23 N. E. 973, 7 L. R. A. 687, 18 Am. St. Rep. 330.

[c] (Iowa, 1884) The answer of a party injured by the negligent starting of a railroad train, made in response to a question by the attending physician as to how the accident occurred, is a privileged communication.—Raymond v. Burlington, C. R. & N. Ry. Co., 65 Iowa, 152, 21 N. W. 495.

[d] (Iowa, 1900) Code, § 4608, does not apply to an affidavit of assured's physician showing the cause of death and the period of decedent's sickness, which was furnished to the insurance company with proofs of death, and introduced by it as an admission by plaintiffs of its contents.—Nelson v. Nederland Life Ins. Co., 81 N. W. 807.

[e] (Mich. 1906) Under Comp. Laws, § 4617, providing that all certificates of death shall be prima facie evidence of the facts recorded therein, duly filed certificates of death are competent evidence, as showing the cause of death as stated therein, though section 10,181 prohibits a physician from disclosing information professionally acquired.—Krapp v. Metropolitan Life Ins. Co., 143 Mich. 369, 106 N. W. 1107.

[f] (Neb. 1902) A certificate as to cause of death, signed by attending physician, and filed with board of health, is inadmissible to establish a fact which would not be admissible if testified to by physician against a party, because of its privileged character.—Sovereign Camp of Woodmen of the World v. Grandon, 89 N. W. 448.

[g] (N. Y. 1900) Code, § 834, declares that a physician shall not disclose information acquired in his professional capacity. Laws 1897, c. 378, § 1172, provides that copies of the records, books, and papers constituting part of the archives of the board of health shall be presumptive evidence of the facts recited. *Held*, in a suit on a benefit certificate, that, as the latter section was local in its application, and not clearly incompatible, the Code provision was not repealed by implication, and hence a physician's certificate, though part of the archives of the board, was inadmissible to show that the insured's aunt had died of consumption, contrary to the warranty contained in the insured's application. Judgment (Sup. 1898) 54 N. Y. Supp. 1023, affirmed.—Davis v. Supreme Lodge Knights of Honor, 165 N. Y. 159, 58 N. E. 891, 31 Civ. Proc. R. 298.

[h] (N. Y. 1904) Code Civ. Proc. § 834, provides that physicians shall not be allowed to disclose information acquired in attending a patient in a professional capacity. Section 955 declares that all maps, surveys, and official records on file in any of the departments of the city of New York, the health department included, "shall be presumptive evidence of their contents, and shall be receivable in evidence in any of the courts of the state in any controversy pending therein between any parties." *Held* not the legislative intent to make death certificates competent as evidence in actions between private parties. Judgment (1902) 77 App. Div. 215, 79 N. Y. Supp. 13, affirmed.—Robinson v. Supreme Commandery, United Order of the Golden Cross of the World, 177 N. Y. 564, 69 N. E. 1130.

[i] (N. Y. 1904) In an action on a life insurance policy defendant alleged that insured, before the issue of the policy, had had an attack of apoplexy, which he concealed from the insurer. The proofs of death contained a certificate of the attending physician of the insured stating that the cause of death was apoplexy, and that the physician had attended the insured at the time of the alleged prior attack. *Held* that, while the beneficiary may show that

the certificate statement as to the prior attack of apoplexy was false, the physician was incompetent to testify in support of his certificate under Code Civ. Proc. § 834, relating to information acquired in professional capacity.—Becker v. Metropolitan Life Ins. Co., 43 Misc. Rep. 99, 87 N. Y. Supp. 980.

[j] (N. Y. 1904) In an action on a life insurance policy, the certificate of the attending physician, having been delivered by the plaintiff to the defendant as a part of the proofs of death, was not privileged, but competent evidence on the trial as an admission against interest.—Carmichael v. John Hancock Mut. Life Ins. Co., 45 Misc. Rep. 597, 90 N. Y. Supp. 1033.

VI. Criminal Acts or Transactions.

[a] (Ind. 1860) In an action for the seduction of a married woman, a physician cannot, under our statute, be allowed to disclose a confession by the wife of her previous adulteries.—Harris v. Rupel, 14 Ind. 209.

[b] (Ind. 1896) In a bastardy case, it was not error to deny defendant a continuance on account of the absence of a witness who is a physician, and would testify that relatrix called on him in his professional capacity, in company with a man other than defendant, and desired to be relieved of the child, and that he made no attempt to relieve her of the child, since what such physician learned was privileged and inadmissible.—Post v. State, 14 Ind. App. 452, 42 N. E. 1120.

[c] (Ind. 1903) Under Burns' Rev. St. 1901, § 505, providing that physicians are not competent witnesses as to matters communicated to them as such by patients in the course of their professional advice or business, a request by a woman to a physician to commit an abortion, and her statements to him that defendant, by whom she was pregnant, had advised her not to commit the abortion, and had offered to marry her, were not privileged, but were admissible in contradiction of the dying declarations of the woman charging defendant with advising the commission of the abortion.—Seifert v. State, 67 N. E. 100.

[d] (Iowa, 1896) Communications from one physician to another, made to secure the aid of the latter in the commission of an abortion, are not privileged.—State v. Smith, 68 N. W. 428.

[e] (Iowa, 1897) In an action against a city for injuries caused by a defective sidewalk, evidence of plaintiff's physicians regarding her condition, and the information obtained while treating her, when called as witnesses for defendant, is within the prohibition of Code 1873, § 3643, providing that no physician shall be allowed to disclose any confidential communication properly intrusted to him in his professional capacity, and necessary and proper to enable him to discharge the functions of his office according to the usual course of practice.—Baxter v. City of Cedar Rapids, 103 Iowa, 599, 72 N. W. 790.

[f] (Iowa, 1900) In an action for injuries from a defective street, defendant city sought to show by plaintiff's attending physician that at the time of treatment for his injury he was also treated for delirum tremens. *Held*, that the evidence was properly excluded, since facts learned by the physician in attending his patient are in the nature of privileged communications, within Code, § 4608, relieving witnesses from testifying concerning such communications.—Finnegan v. City of Sioux City, 83 N. W. 907.

[g] (Iowa, 1901) On trial for murder, Code, § 4608, providing that no physician or surgeon who obtains information by reason of his employment shall be allowed to disclose any confidential communication intrusted to him in his professional capacity, and necessary and proper to aid him, did not prevent a surgeon, who was called to attend deceased shortly before her death, from testifying that she was suffering from wounds which he believed she had received in an attempt to perform a criminal operation.—State v. Grimmell, 88 N. W. 342.

[h] (Mich. 1891) In an action for assault and battery defendant may introduce as witnesses the physicians who attend plaintiff, and prove the fact of such attendance, but they cannot testify as to her condition where their knowledge was acquired in their professional capacity, since How. St. § 7516, prohibits a physician from disclosing any information which he may have acquired in attending a patient in his professional capacity.—Cooley v. Foltz, 85 Mich. 47, 48 N. W. 176.

[i] (Mich. 1897) Evidence of the attending physician that the complainant in bastardy told him who was the father of her child was not inadmissible as a confidential communication, within How. Ann. St. § 7516, prohibiting disclosures of information necessary to enable witness to prescribe as physician or do any act as a surgeon.—People v. Cole, 71 N. W. 455.

[j] (Minn. 1905) Professional communications are not privileged if made in furtherance of a criminal purpose, but are properly excluded when the facts sought to be proven were only remotely relevant to the issue.—McKenzie v. Banks, 94 Minn. 496, 103 N. W. 497.

[k] (Mont. 1877) The provision of Cod. St. p. 125, § 450, that a physician shall not testify, without the consent of the patient, as to any information he may have acquired while attending the same, *held* not to exclude testimony of a physician, on trial of a patient for incest, that one of the defendants had stated to him that they, the defendants, had had sexual intercourse.—Territory v. Corbett, 3 Mont. 50.

[l] (N. Y. 1839) A physician, consulted by a seducer as to the means of producing an abortion, is not privileged from testifying.—Hewitt v. Prime, 21 Wend. 79.

[m] (N. Y. 1873) In an action for divorce, upon the ground of adultery, a physician testified to certain circumstances and conversations tending to establish the fact of adultery, and stated that he derived his information from the defendant as a patient, in professional confidence. *Held*, that the testimony of witness was inadmissible, under the statute forbidding the disclosure by a physician of professional communications. 2 Rev. St. p. 406, § 73.—Hunn v. Hunn, 1 Thomp. & C. 499.

[n] (N. Y. 1889) Defendant was indicted for manslaughter in aiding a woman to produce a miscarriage. He entered the office of a physician, and stated that the woman in question was very sick, and that the physician must come at once. On the physician's saying, in answer to a question, that he would like to know what the difficulty was before leaving the office, as such knowledge would enable him to provide himself with the proper remedies, defendant informed him that the woman was about three months advanced in pregnancy; that she inserted a catheter into her womb, and that defendant then blew into it; that he did so because the same process had proved successful on a former occasion. *Held*, that such statements to the physician were privileged.—People v. Brower, 53 Hun, 217, 6 N. Y. Supp. 730, 7 N. Y. Cr. R. 292.

[o] (N. Y. 1893) On a trial of accused for murder of his wife, evidence by the uncle of the deceased, that as her physician he removed a dead fœtus of five months' formation, and that defendant said he had performed two operations on his wife, and supposed everything was removed, is not incompetent as privileged communications.—People v. Harris, 136 N. Y. 423, 33 N. E. 65.

[p] (N. Y. 1900) Code Civ. Proc. § 834, provides that a physician shall not be allowed to disclose any information acquired in attending a patient in a professional capacity. *Held*, in a prosecution for the murder of a patient by poisoning, that evidence of a physician attending the patient that she was addicted to the excessive use of morphine, which continued to about the time of her death, was admissible.—People v. Benham, 30 Misc. Rep. 466, 63 N. Y. Supp. 923, 14 N. Y. Cr. R. 434.

[q] (N. Y. 1904) In a proceeding by the people on the relation of the mother of a bastard child against the putative father for an order of filiation, Code Civ. Proc. § 834, forbidding a physician from disclosing any information which he acquired in a professional capacity, and which was necessary to enable him to act in that capacity, does not render a physician incompetent to testify as to whether the mother of the child, prior to its birth, in a consultation with the witness, made a charge against any person as being the cause of her condition.—People v. Abrahams, 96 App. Div. 27, 88 N. Y. Supp. 924.

(172 Fed. 305.)

OAKES et al. v. UNITED STATES.

(Circuit Court of Appeals, Eighth Circuit. August 2, 1909.)

No. 2,797.

1. INDIANS (§ 13*)—RIGHT TO SHARE IN TRIBAL PROPERTY.

Originally the test of the right of individual Indians to share in tribal lands and other tribal property was existing membership in the tribe; but this rule has been so broadened by Act March 3, 1875, c. 131, § 15, 18 Stat. 420 (U. S. Comp. St. 1901, p. 1419), and Act Feb. 8, 1887, c. 119, § 6, 24 Stat. 390, and other acts, as to place individual Indians who have abandoned tribal relations, once existing, and have adopted the customs, habits, and manners of civilized life, upon the same footing in respect of this right as though they had maintained their tribal relations.

[Ed. Note.—For other cases, see Indians, Dec. Dig. § 13.*]

2. INDIANS (§ 13*)—ACT JANUARY 14, 1889, RELATING TO CHIPPEWAS IN MINNESOTA—INTERPRETATION.

Act Jan. 14, 1889, c. 24, 25 Stat. 642, relating to the cession of part of the Chippewa reservations in Minnesota and to the allotment in severalty of the remainder, does not expressly or by necessary implication displace the saving provisions of the acts of 1875 and 1887, above named, whereby individual Indians who have abandoned tribal relations, once existing, and have adopted the customs, habits, and manners of civilized life, are accorded the same right to share in tribal property as though they had maintained their tribal relations; nor does it render those provisions less applicable to the Chippewas in Minnesota than to other Indians.

[Ed. Note.—For other cases, see Indians, Dec. Dig. § 13.*]

3. INDIANS (§ 13*)—ACT JUNE 7, 1897, RELATING TO RIGHTS OF CHILDREN OF MIXED BLOOD.

Act June 7, 1897, c. 3, 30 Stat. 62, relating to the rights of children of a white man and an Indian woman in tribal property, does not embrace the children of a mother who was living at the time of its passage and was not then recognized by the tribe as one of its members.

[Ed. Note.—For other cases, see Indians, Dec. Dig. § 13.*]

4. SUIT TO ENFORCE RIGHT TO ALLOTMENT—PARTIES.

Quære: Whether in a suit against the United States under Act Feb. 6, 1901, c. 217, 31 Stat. 760, to enforce a right to an allotment of specified land, which has been allotted to another Indian, a decree displacing or annulling the existing allotment lawfully can be rendered without making the allottee a party and giving him an opportunity to defend.

(Syllabus by the Court.)

Appeal from the Circuit Court of the United States for the District of Minnesota.

Harvey S. Clapp (C. B. Miller, on the brief), for appellants.
Charles C. Houpt, U. S. Atty.

Before SANBORN and VAN DEVANTER, Circuit Judges, and AMIDON, District Judge.

VAN DEVANTER, Circuit Judge. By their suit commenced and prosecuted under Act Feb. 6, 1901, c. 217, 31 Stat. 760, the appellants asserted that they were entitled to have allotted to them in severalty, under Act Jan. 14, 1889, c. 24, 25 Stat. 642, certain specified lands in the White Earth Indian reservation in Minnesota, that their

applications for such allotments had been unlawfully denied by the officers charged with the allotment of the lands in that reservation, and therefore that they were entitled to a decree recognizing and enforcing their rights to such allotments. Upon the final hearing the Circuit Court, being of opinion that none of the appellants came within the terms of the act of 1889, entered a decree dismissing the bill, and an appeal has brought the case here. The facts established by the proofs are as follows:

The appellants are descendants of Margaret Beaulieu, a full-blood Mississippi Chippewa, who was enrolled and recognized during all her life as a member of that tribe and was living upon the tribal reservation at White Earth at the time of her death in 1877. Jane B. Oakes, one of the appellants, is a daughter of Margaret Beaulieu, was by birth a member of the same tribe, and was enrolled and recognized as such from the time of her birth until 1849. In 1829, while she was attending a mission school, she married a Mr. Oakes, a white man, and they lived at a trading post in the Chippewa country until 1849. In that year they moved to Ft. Ripley on the Mississippi, and the next year to St. Paul, where Mr. Oakes engaged in the banking business until the time of his death in 1879. Jane B. Jones, another of the appellants, is a daughter of Mrs. Oakes, was born in the Chippewa country in 1841, and was enrolled and recognized as a member of the Mississippi Chippewa tribe until 1849, when her parents took her to Ft. Ripley and then to St. Paul. She grew to womanhood in the latter place and has been married twice, each time to a white man. Jane Andrews and Cornelia Van Etten Bent, the remaining appellants, are daughters of Mrs. Jones by her first husband. They were born and reared in St. Paul, never were enrolled or recognized as members of the tribe, and are married to white men. After the Oakes family moved to St. Paul, Mrs. Oakes and Mrs. Jones abandoned their former tribal relations, adopted the customs, habits, and manners of civilized life, and ceased to be recognized as members of the tribe. Sometimes they exchanged visits with members of the tribe; but these visits did not occur often, and were confined to relatives. The appellants were all residents of St. Paul when the act of 1889 was passed, and shortly thereafter they asserted that they were entitled to allotments thereunder. In 1894 the names of Mrs. Oakes and Mrs. Jones were placed upon a supplemental census of White Earth Mississippi Chippewas by the chairman of the commission charged with making a census and allotments under the act of 1889, and the next year their names were dropped from the census; but the circumstances in which these acts were done are not disclosed. In 1905, before applying for allotments of specific lands, Mrs. Oakes and Mrs. Jones removed to and took up their residence upon the White Earth Reservation. Whether or not Mrs. Andrews and Mrs. Bent did likewise may be left undetermined, because, if they did, it would not help them, as will be seen presently.

The White Earth reservation was set apart as a tribal reservation for the use and occupancy of the Mississippi Chippewas under the treaty of March 19, 1867 (16 Stat. 719), and was being allotted in severalty under the act of 1889 when the appellants applied for allot-

ments therein and when this suit was commenced. That act is entitled "An act for the relief and civilization of the Chippewa Indians in the state of Minnesota," and provides for obtaining a cession and relinquishment by "all the different bands or tribes of Chippewa Indians in the state of Minnesota," of all their tribal reservations in that state, excepting so much of the Red Lake reservation and of the White Earth reservation as shall be deemed necessary "to make and fill the allotments required by this and existing acts." It further provides: That the cession and relinquishment shall be deemed sufficient as to each reservation, other than the Red Lake reservation, if made and assented to in writing by a designated portion of "the band or tribe of Indians occupying and belonging to" such reservation, and shall be sufficient as to the Red Lake reservation if made and assented to in like manner by a like portion of "all the Chippewa Indians in Minnesota"; that, for the purpose of determining whether the requisite number of Indians participate in the cession and relinquishment and of making the allotments and payments mentioned in the act, an accurate census of "each tribe or band" shall be made; that as soon as the census shall be taken, and the cession and relinquishment shall be obtained and be approved by the President, "all of said Chippewa Indians in the state of Minnesota, except those on the Red Lake reservation, shall * * * be removed to and take up their residence on the White Earth reservation," and thereupon allotments in severalty shall be made to the Red Lake Indians from the unceded part of the Red Lake reservation and to "all the other of said Indians" from the lands in the unceded part of the White Earth reservation, such allotments to be made "in conformity with" the general allotment act of February 8, 1887 (24 Stat. 388, c. 119); that any of said Indians "residing on" any of said ceded reservations may, in his discretion, take his allotment on such reservation; and that all money accruing from the disposal of the ceded lands, after deducting expenses, shall be placed in the treasury of the United States to the credit of "all the Chippewa Indians in Minnesota" and be used for their benefit or paid out to them in the manner and at the times stated in the act. The cession and relinquishment so provided for were obtained in the manner prescribed and were approved by the President March 4, 1890. House Ex. Doc. No. 247 (1st Sess. 51st Cong.).

Originally, the test of the right of individual Indians to share in tribal lands, like the Chippewa reservations in Minnesota, was existing membership in the tribe, and this was true of all tribal property. The question therefore arises: Is there any provision of law which broadens this original rule in a manner which is helpful to the appellants or any of them? If not, their effort to obtain allotments from tribal lands must fail, because it is a necessary conclusion from the facts before recited that Mrs. Oakes and Mrs. Jones, although once members of the Mississippi Chippewa tribe, long since ceased to be such, and that Mrs. Andrews and Mrs. Bent, although possessing some Mississippi Chippewa blood, never were members of the tribe; and, if there be such a provision of law, it must be found elsewhere than in the act of 1889, for that act does not in itself alter the original rule in a manner which is helpful to any of the appellants, but

contains provisions which, in the absence of some provision of law to the contrary, probably would require that the allotments mentioned therein be confined to tribal Indians.

For many years the treaties and legislation relating to the Indians proceeded largely upon the theory that the welfare of both the Indians and the whites required that the former be kept in tribal communities separated from the latter, and, while that policy prevailed, effect was given to the original rule respecting the right to share in tribal property; but Congress later adopted the policy of encouraging individual Indians to abandon their tribal relations and to adopt the customs, habits, and manners of civilized life, and, as an incident to this change in policy, statutes were enacted declaring that the right to share in tribal property should not be impaired or affected by such a severance of tribal relations, whether occurring theretofore or thereafter. One of the earlier acts upon the subject was that of March 3, 1865 (13 Stat. 562, c. 127, § 4), which gave to certain chiefs, warriors, and heads of families of the Stockbridge Munsee tribe the right to become citizens of the United States, upon their dissolving all tribal relations, adopting the habits of civilized life, becoming self-supporting, and learning to read and speak the English language, and then declared that they should not be deprived thereby of the annuities to which they were or might be entitled. That act and others of its kind marked the beginning of the change and were followed by the act of March 3, 1875 (18 Stat. 420, c. 131, § 15 [U. S. Comp. St. 1901, p. 1419]), which extends the benefits of the homestead law to "any Indian born in the United States, who is the head of a family, or who has arrived at the age of twenty-one years, and who has abandoned, or may hereafter abandon his tribal relations," and then declares that:

> "Any such Indian shall be entitled to his distributive share of all annuities, tribal funds, lands and other property, the same as though he had maintained his tribal relations."

And next came Act Feb. 8, 1887, c. 119, 24 Stat. 388, which, in its sixth section, provides:

> "And every Indian born within the territorial limits of the United States who has voluntarily taken up, within said limits, his residence separate and apart from any tribe of Indians therein, and has adopted the habits of civilized life, is hereby declared to be a citizen of the United States, and is entitled to all the rights, privileges and immunities of such citizens, whether said Indian has been or not, by birth or otherwise, a member of any tribe of Indians within the territorial limits of the United States, without in any manner impairing or otherwise affecting the right of any such Indian to tribal or other property."

Another cognate provision is found in Act Aug. 9, 1888, c. 818, 25 Stat. 392, which declares that a tribal Indian woman "hereafter" marrying a citizen of the United States shall become thereby a citizen of the United States, with all the rights, privileges, and immunities of such a citizen, without impairing or in any way affecting her right to any tribal property or any interest therein.

These acts disclose a settled and persistent purpose on the part of Congress so to broaden the original rule respecting the right to share in tribal property as to place individual Indians who have abandoned

tribal relations, once existing, and have adopted the customs, habits, and manners of civilized life, upon the same footing, in that regard, as though they had maintained their tribal relations. Not only this, but these acts, omitting that of 1865, are general and continuing in their nature, and therefore are as applicable to the Chippewas in Minnesota as to other Indians, unless the act of 1889 discloses, either expressly or by necessary implication, that Congress intended otherwise. In our opinion that act does not thus disclose such an intention. True, it speaks of the Indians concerned as "bands or tribes," provides that all, save those on the Red Lake reservation, "shall * * * be removed" to the White Earth reservation, and is entitled "An act for the relief and civilization of the Chippewa Indians in the state of Minnesota"; but the inference sought to be drawn therefrom, namely, that only tribal and uncivilized Indians are to have the benefits of the act, is materially weakened when we turn to other provisions, such as those directing that enough lands be withheld from the contemplated cession "to make and fill the allotments required by this and existing acts," and that the allotments be made "in conformity with" the act of February 8, 1887, which expressly recognizes the right of individual Indians, who have abandoned their tribal relations and have adopted the customs, habits, and manners of civilized life, to share in tribal property. An inference of such uncertain strength is not enough to overcome the general aversion to repeals by implication, especially where a settled policy in legislation is involved and no reason for disturbing it is apparent. United States v. Gear, 3 How. 120, 130, 11 L. Ed. 523; Frost v. Wenie, 157 U. S. 46, 58, 15 Sup. Ct. 532, 39 L. Ed. 614; United States v. Healey, 160 U. S. 136, 146, 16 Sup. Ct. 247, 40 L. Ed. 369; United States v. Greathouse, 166 U. S. 601, 605, 17 Sup. Ct. 701, 41 L. Ed. 1130; McChord v. Louisville, etc., Co., 183 U. S. 483, 500, 22 Sup. Ct. 165, 46 L. Ed. 289; Great Northern Ry. Co. v. United States, 84 C. C. A. 93, 109, 155 Fed. 945, 961.

We conclude that Mrs. Oakes and Mrs. Jones, who formerly were members of the tribe, are within the saving provisions of the acts of March 3, 1875, and February 8, 1887, and so are entitled to share in the allotment and distribution of the tribal property, the same as though they had maintained their tribal relations, but that Mrs. Andrews and Mrs. Bent, who never were members of the tribe, cannot derive any benefit from any of the acts mentioned; and we reach this conclusion with greater satisfaction, because it is in accord with rulings of the Secretary of the Interior in cases which are not distinguishable from this. William Banks, 26 Land Dec. Dep. Int. 71; Minnie H. Sparks, 36 Land Dec. Dep. Int. 234.

In support of the claims of Mrs. Andrews and Mrs. Bent, our attention is invited to the still later act of June 7, 1897 (30 Stat. 90, c. 3, § 1), which reads as follows:

"All children born of a marriage heretofore solemnized between a white man and an Indian woman, by blood and not by adoption, where said Indian woman is at this time, or was at the time of her death, recognized by the tribe shall have the same rights and privileges to the property of the tribe to which the mother belongs, or belonged at the time of her death, by

blood, as any other member of the tribe, and no prior act of Congress shall be construed as to debar such child of such right."

But of this act it is enough to say that its terms are such that it does not embrace the children of a mother, such as Mrs. Jones, who was living at the time of its passage and was not then recognized by the tribe as one of its members.

As a defense to the claims of Mrs. Oakes and Mrs. Jones, it is alleged that all of the land selected by the former and a part of that selected by the latter has been "duly allotted" to other Indians; but, as this defense was not passed upon by the Circuit Court, and as the record indicates that the evidence bearing thereon is not as full and clear as it might be, we deem it the better course to leave the matter open to further consideration in the Circuit Court. And it is suggested, without indicating any conclusion thereon, that a question has arisen as to whether a decree displacing or annulling the existing allotments to other Indians lawfully can be rendered, unless the allottees be made parties and be given an opportunity to defend. United States v. Fairbanks (decided by this court June 3, 1909) 96 C. C. A. 229, 171 Fed. 337; Minnesota v. Hitchcock, 185 U. S. 373, 387, 22 Sup. Ct. 650, 46 L. Ed. 954.

In the answer it is also alleged that part of the land selected by Mrs. Jones has been specially set apart for allotment to Indians who may be removed from the Mille Lac reservation; but no proof of any such setting apart or of any authority therefor is contained in the record, and no mention thereof is made in the government's brief, so this defense must be regarded as abandoned.

Following what has been said, the decree of the Circuit Court is affirmed in so far as it dismisses the bill as to Mrs. Andrews and Mrs. Bent, and in other respects it is reversed, with directions for further proceedings not inconsistent with the views expressed herein.

(172 Fed. 310.)

COLONIAL TRUST CO. v. MONTELLO BRICK WORKS.

(Circuit Court of Appeals, Third Circuit. August 2, 1909.)

No. 32.

CORPORATIONS (§ 642*)—FOREIGN CORPORATIONS—"DOING BUSINESS IN STATE."

A corporation organized under the laws of Delaware by residents of Pennsylvania for the purpose of owning the stock of and financing certain Pennsylvania corporations having the same officers and substantially the same stockholders and which in fact did nothing else, but maintained its office, held its directors' meetings, registered its bonds, and made the loans to the other corporations in Pennsylvania, was doing business in that state within the meaning of Act Pa. April 22, 1874 (P. L. 108), and its failure to file its statement and otherwise comply with the requirements of that act rendered its contracts made within the state void and unenforceable.

[Ed. Note.—For other cases, see Corporations, Cent. Dig. §§ 2520–2527; Dec. Dig. § 642.*

For other definitions, see Words and Phrases, vol. 3, pp. 2155–2160; vol. 8, pp. 7640, 7641.]

Appeal from the District Court of the United States for the Eastern District of Pennsylvania.

For opinion below, see 163 Fed. 621.

Richmond L. Jones, Charles Henry Jones, and John G. Johnson, for appellant.

Harry F. Kantner, for appellee.

Wellington M. Bertolet, J. Howard Reber, Arthur G. Dickson, and Duane, Morris & Heckscher, on brief of objecting creditors.

Before GRAY and BUFFINGTON, Circuit Judges, and BRADFORD, District Judge.

BUFFINGTON, Circuit Judge. In the court below the claim of the Colonial Trust Company, trustee for bondholders of the United States Brick Company, against the Montello Brick Works, a bankrupt, was denied. Thereupon the trust company appealed. The claim in question consisted of promissory notes given by the bankrupt company to the United States Brick Company for borrowed money, and assigned as additional security for its bonds, to the Colonial Trust Company, trustee. The United States Brick Company was a corporation of the state of Delaware, and never registered as directed by the Pennsylvania act of 22 April, 1874 (P. L. 108), which provides:

"It shall not be lawful for any corporation to do any business in this commonwealth, until it shall have filed in the office of the secretary of the commonwealth, a statement under the seal of said corporation and signed by the president or secretary thereof, showing the title and object of said corporation, the location of its office or offices, and the name or names of its authorized agent or agents therein. * * * Any person or persons, agent, officer or employé of any such foreign corporation, who shall transact any business within this commonwealth for any such foreign corporation, without the provisions of this act being complied with, shall be guilty of a misdemeanor, and on conviction thereof shall be punished by imprisonment not exceeding thirty days, and by fine not exceeding one thousand dollars, or either, at the discretion of the court trying the same."

If the Delaware Company in the advance of this money and the taking of these notes was doing business in the state of Pennsylvania, the claim was rightly refused. Delaware Co. v. Passenger Ry. Co., 204 Pa. 25, 53 Atl. 533; Pittsburgh Construction Co. v. West Side Belt Ry. Co., 154 Fed. 929, 83 C. C. A. 501, 11 L. R. A. (N. S.) 1145. We turn then to the question whether it was so doing business.

Now, it may be conceded that, if the transaction here in question consisted simply of the loan of money made in Pennsylvania by a foreign corporation to a company in business in that state, we would under Construction Co. v. Winton, 208 Pa. 469, 57 Atl. 955, hold it was not doing business in that state. Moreover, if the alleged doing of business by a foreign corporation in Pennsylvania consisted simply in its purchase of stock in a corporation of that state, we would under Commonwealth v. Standard Oil Co., 101 Pa. 119, also hold this did not constitute doing business within the state. And it has been contended this was all that was done in this case. Regarded from mere surface view that may be the case, but when the transaction is judged by what was intended and done by all parties, including the Delaware

Company, we think it clear the latter was doing business in the state of Pennsylvania. This requires a due appreciation of the relation between the United States Brick Company and the Montello Brick Works. The Montello Brick Company, a Pennsylvania corporation chartered December 8, 1899, owned brick plants in that state. It leased its plants to the Montello Brick Works, the present bankrupt, a Pennsylvania corporation chartered December 4, 1902. The board of directors of the two companies at that time and during the transactions here detailed consisted of the same persons. On November 18, 1904, the same persons who were interested in both the Montello companies, with a view to financing a number of brick plants in Pennsylvania, in addition to the Montello plants, joined in the organization of a holding and promoting company under the laws of Delaware, and of which the directors in the two Montello companies became directors also. This Delaware Company took over the patents of one Gery covering a process for making brick, subject to a license held by the Montello Brick Works, paying therefor its entire capital stock to Gery. This stock was distributed in part to the stockholders of the two Montello companies, a part used as a bonus to accompany a proposed bond issue of the United States Brick Company and a part retained as treasury stock. The object of the creation of the Delaware Company was to develop these patents, and this was to be done by its financing of the Montello Brick Works, which company was to operate and develop the same at its plants. The loans in question were accordingly made to that company under arrangements made prior to the organization of the Delaware Company and to effectuate which purpose it was chartered. In pursuance of these financing plans the Delaware Company on December 24, 1904, executed a deed of trust to the Colonial Trust Company as trustee, whereby it conveyed to the latter 20,000 shares, being a majority it had acquired of the capital stock of the Montello Brick Company as security for an issue of 1,000,000 of its bonds. These bonds were made payable at Reading, Pa. The United States Brick Company covenanted to pay all taxes assessed by the state of Pennsylvania upon them, covenanted it would suffer no lien or incumbrance to be placed on the pledged stock of the Montello Brick Works or dispose of it; that it would permit no increase thereof; that on default of the Montello Brick Works it would pay all taxes upon its property. The trust then provided:

"Sec. 7. United States Brick Company shall from time to time make advances of moneys to Montello Brick Works to such extent as shall be necessary to insure sufficient and proper betterments, maintenances, extensions, improvements, equipments and alterations of its respective properties, and also to such extent as shall be necessary to pay all operating expenses and fixed charges, including interest, taxes and rentals, whenever the earnings of said Montello Brick Works shall be insufficient, for the purpose; and to prevent an indebtedness of the said Montello Brick Works, resulting from said advances, in such way and manner as will injure the value as collateral of the shares of stock of Montello Brick Works held under this trust agreement, United States Brick Company agrees that it will take and will assign to trustee evidences of indebtedness resulting from all such advances, from time to time as the latter shall be made, and trustee shall hold the same as collateral security for the carrying out of the covenants of this collateral indenture. There shall be no duty upon trustee to collect such indebtedness,

and it shall not in any way be responsible for its failure so to do. The trust deed shall operate to vest in trustee an equitable title in and to said indebtedness for advances as the same from time to time shall arise. Interest on the said indebtedness until default under trust deed shall be collectible by United States Brick Company and shall not be payable to the trustee. Whenever said indebtedness shall be paid to United States Brick Company, the obligations or evidences of indebtedness shall be cancelled by the trustee and returned to Montello Brick Works."

In accordance with this covenant the money here involved was advanced by the United States Brick Company to the Montello Brick Works, the notes in question given, and subsequently assigned by it to the Colonial Trust Company as trustee. The proofs show the office of the company was in Reading, Pa. All of its directors, with the exception of a formal Delaware man, were residents of Pennsylvania. Its officers all resided at Reading, and did their official acts there; its books and bank accounts were kept there; its bonds were registered at Reading, and were payable there; the money in question was paid at Reading, and the notes executed there. Out of $300,000 of available funds the Delaware Company had about $267,000 were thus advanced by it in Pennsylvania to the Montello Brick Works and by that company used in Pennsylvania in accordance with the wishes of the Delaware Company. It will thus appear this company was called into being to do local Pennsylvania work. It had no purpose to exercise its charter power elsewhere than in that state, and it made no effort or pretense so to do. Everything it did was a local act and in fulfillment of the local purpose for which it was created. Manifestly its sole purpose was to avoid the requirements of the Pennsylvania laws in the issue of bonds and doing the financing necessary to enable the local company to carry on the local operations. Indeed, it is clear it was a mere extra-Pennsylvania agency called into being and locally utilized by a local company for the purpose of doing local work. On the part of the Montello Brick Works, while it was a case of facit per alium, it was none the less a case of facit per se. And viewed from the latter standpoint it is clear that all its operations were, as they were at all times intended they should be, a doing of business in Pennsylvania. Judged from the intent of all parties concerned and finding such intent emphasized by every proven act, we are clear the undoubted purpose of every one concerned was to have this company do business in Pennsylvania. Whatever its powers were to act elsewhere is quite apart from the present inquiry as to what it actually did in Pennsylvania. It is to be judged by the things it has done here, and not by those it has left undone elsewhere. While we recognize the legal principle that a corporation does not lose its entity by the ownership of the bulk or even the whole of its stock by another corporation (Monongahela Co. v. Pittsburgh Co., 196 Pa. 25, 46 Atl. 99, 79 Am. St. Rep. 685), yet it is equally well settled courts will look beyond the mere artificial personality which incorporation confers, and, if necessary to work out equitable ends, will ignore corporate forms (Penna. Knitting Mills v. Bibb Co., 12 Pa. Super. Ct. 346; Montgomery Co. v. Dienelt, 133 Pa. 585, 19 Atl. 428, 19 Am. St. Rep. 663; Kendall v. Klapperthal, 202 Pa. 596, 52 Atl. 92; Gas Co. v. West,

50 Iowa, 16). Indeed, we think the entire controversy was in terse terms summarized by the court below in saying:

"The brick company has an omnibus charter, under which it can do many things, but for present purposes it is enough to note that it was undoubtedly organized for doing just what it proceeded to do, namely, to acquire the stock of the bankrupt and to lend it money to carry on the operation of brick making under certain patents. This in a few words is the essential fact of the present controversy, and to state it is equivalent to drawing the conclusion."

Finding no error in the ruling of the court below, its order respecting the appellant's claim must be affirmed, and the present appeal dismissed.

(172 Fed. 314.)

LANCASTER ELECTRIC LIGHT, HEAT & POWER CO. v. PLATT IRON WORKS CO.

(Circuit Court of Appeals, Third Circuit. June 8, 1909.)

No. 33.

SALES (§ 176*)—CONSTRUCTION OF CONTRACT—WAIVER OF DELAY BY "ACCEPTANCE" OF MACHINERY.

A contract to furnish certain machinery, to be subject to tests after its shipment and installation to determine whether it met the warranties on which it was sold before it was to be fully paid for, which installation and tests would necessarily require a considerable time, provided that "the acceptance of the machinery upon arrival shall constitute a waiver of all damages for delays." *Held* that, construing the entire contract together, the word "acceptance" in such provision was used in the sense only of "receipt," meaning that the voluntary receipt of the machinery on its shipment, notwithstanding delays, should be a waiver of the same, although still subject to the tests as to its efficiency and final acceptance.

[Ed. Note.—For other cases, see Sales, Cent. Dig. § 436; Dec. Dig. § 176.*

For other definitions, see Words and Phrases, vol. 1, pp. 53–57.]

In Error to the Circuit Court of the United States for the Eastern District of Pennsylvania.

John G. Johnson, for plaintiff in error.

R. Stuart Smith, for defendant in error.

Before GRAY and BUFFINGTON, Circuit Judges, and BRADFORD, District Judge.

BRADFORD, District Judge. The Platt Iron Works Company, the defendant in error, hereinafter referred to as the plaintiff, brought an action of assumpsit in the Circuit Court of the United States for the Eastern District of Pennsylvania against the Lancaster Electric Light, Heat and Power Company, the plaintiff in error, hereinafter referred to as the defendant, and recovered judgment against the defendant for $6,541.68 damages, beside costs. For the reversal of this judgment this writ of error is prosecuted. It appears from the evidence and is not disputed that the plaintiff in 1907 was a manufacturer, among other things, of turbine machinery for use in connection with water power at Dayton, Ohio; that the defendant in the

same year was engaged in the manufacture of electricity by water power at Lancaster, Pennsylvania; and that on or about February 20, 1907, the plaintiff and defendant entered into a written contract as follows:

"Proposal–Contract
Victor Turbine Machinery
Made by
The Platt Iron Works Company,
Dayton, Ohio, U. S. A.

Dayton, O., February 20, 1907.

The Platt Iron Works Company, hereinafter called the 'Company,' proposes to furnish to The Lancaster Electric Light, Heat & Power Company, Lancaster, Penna., hereinafter called the 'Purchaser,' the following Victor Turbine Machinery and Apparatus, according to the accompanying specifications and the following express terms and conditions:

Apparatus:

Two pairs of 42" Turbines, quarter turn discharge, draft-tubes, bulk-head thimbles, complete with Draw Rod Gate work, shaft extension, face couplings and sleeve jaw couplings, with Generator type bearings; also shaft extensions one 21" Vertical R. H. Wheel, with shaft extension and draft-tube.

Shipment:

One pair of the 42" wheels specified above with connecting shaft and coupling, including the Exciter wheel complete will be shipped on June 1st. The balance of the shipment will go forward 30 days thereafter. The half of couplings that go on Generator shafts bit up, and will be rough board, then shipped to Makers of the Generators.

Prices & Terms:

The 'Company' will furnish the above specified apparatus to the 'Purchaser' for the sum of Nine Thousand Nine Hundred ($9,900.00) Dollars F. O. B. cars at Lancaster, Penna., to be paid in funds at par in Dayton, Ohio, in the following manner, that is to say: 33⅓ per cent. on receipt of bill of lading; 33⅓ per cent. thirty days from date of bill of lading; and balance when the machinery is put in operation and tested as per guarantee. In any event, the time of last payment is not to exceed Four Months from date of bill of lading.

Erecting Superintendent:

The 'Company' will supply a competent man to superintend the erection of said machinery for the sum of $5.00 per day, plus expenses from date of his leaving the factory until his return; and in case the services of said man are not desired by the 'Purchaser,' the 'Company' shall not be held responsible for faulty or defective erection of this apparatus, or trouble arising therefrom.

General Guarantee:

The machinery covered by this agreement, is guaranteed to operate and fill the requirements of this agreement, when used and operated under the conditions specified herein. The machinery is further guaranteed against mechanical defects due either to faulty design or workmanship, and the 'Company' will furnish without charge, any part or parts thereof, which may prove defective under such conditions, during a period of six months from date of putting machinery in operation.

Guarantee:

Each pair of 42" Wheels, when working under 15' effective head, to develop 462 HP. at Generator Coupling, less 15% for friction on bearings, running at 125 revolutions, using the water at 80% efficiency, and that the 21" wheel will develop 57 Horsepower under the same head, running between 240 and 260 revolutions, with the same efficiency.

Specifications.

Each pair of 42" Turbines will be mounted on Horizontal Shafts, and each wheel will discharge into a separate quarter turn, 6' 6" in diameter. The wheel shafts will be made of the best mild forged steel, 7⅞" in diameter, coupled between the necks of quarter-turn, by means of forged flange coupling,

and this section of shaft, carrying the load of the backwheel, to be 6⅜" in diameter, the head end extended through bulk-head and cover plate a distance of 6' 3½" from face of wall to center of wheel coupling, and the distance from the face of the same wall to the center of Generator is 29' 4½." The two extensions of shaft, connecting the water wheel coupling to the Generator coupling, will also be made of mild forged steel, 7⅞" in diameter, and made the necessary length, provided with one extra heavy face coupling, to connect to Generator for each side. The two shaft extensions will also be provided with a sleeve jaw cut-off coupling, for the means of disconnecting either pair of wheels, as desired. Said couplings will be operated by a lever, which will be attached to one of the stands; also said shafts will be supported by two Generator type bearings, having a base of 5' long, and a vertical height of 69" from the center of the shaft to the bottom of base. Each pair of wheels will be provided with steel thimble, made out of quarter-inch plate 7' in diameter at the front end enlarged to 8' diameter where passing through the wall; the wall being 40" thick, provided with one steel angle; also one cast iron angle, and riveted to same, and bulk-head cover plate bolted on to the cast iron angle. In connection with this bulk-head cover plate the dome of each 42" wheel at the head end, will be connected by a flange to said plate, thereby, removing the water pressure from the stuffing boxes. On each cover plate will be mounted all gate mechanism, which will be of our patent Draw Rod Type, removing all gears out of the water. All Gears and Pinions, for operating said gates, will be cut gears. The cross shaft on each pair of wheels, for connecting governor, will be extended 8" outside of bearing. One end keyseated only, and the other end provided with a hand-wheel. The draw rods where passing through bearings will be covered with brass; also all bushings connected with same will be of brass. All adjusting screws used in connecting with adjusting boxes, that are under the water, will also be made of brass. At the head end of each pair of wheels, there will be provided an end thrust bearing of the Marine type. Said bearing will consist of a sleeve slipped on over the shaft, provided with necessary rings or collars, and is also to act as end thrust bearing and shaft bearing, having a water jacket and base under same to conform in design to the Generator stands. The distance from tail water to the center of the shaft will be 6' 4" and the vertical distance from center of the shaft to head water, 9' 8." The length of the draft-tube will be 8' 4" from the center of wheel shaft.

The 21" Right Hand Vertical Turbine will have a draft-tube extended the necessary length, provided with face coupling and the vertical shaft extended the necessary distance for making connection to the Exciter; also the gate shaft on said wheel will be extended through the wall, and provided with stuffing box; all stuffing boxes throughout, glands of same being made of brass, and all bearings that are babbitt lined, the babbitt will be first poured into the box and then afterwards hammered well, then bored out and scraped.

All the above to be in strict accordance with our detail drawing 17101 and General outline 17102. We also agree to furnish drawings of the 15" 'I' beams, showing the necessary openings for the draft tubes; said beams we do not furnish, but will be furnished by the 'Purchaser' and put in position, ready to receive the Turbines on arrival.

It is further understood and agreed that all previous communications, either verbal or written, with reference to the subject matter of this agreement, are hereby withdrawn and annulled, and this contract shall be modified only by a duly approved supplementary agreement signed by both parties.

The 'Company' shall not be held liable for delays caused by fires, strikes, riots, or by any other causes beyond its control, and it is agreed that the time of shipment herein specified shall be contingent upon the furnishing of plans, drawings or other apparatus to be furnished to the 'Company' and to operate in conjunction with the apparatus herein specified and that the acceptance of the machinery upon arrival shall constitute a waiver of all damages for delays.

The foregoing proposal, made in duplicate, is subject to the approval of an executive officer of the 'Company' and shall not be binding upon the 'Com-

pany' until so approved, nor, unless accepted by the 'Purchaser' within ten days from date hereof.

Signed in duplicate. The Platt Iron Works Company,
Per T. R. Van Degrift.

Approved by
R. S. Fowler, Asst. Secty. & Treas.
Accepted by Purchaser:
Lancaster E. L. Ht. & Pr. Co.,
Edw. D. Ruth, Supt.
Approved by
Lancaster Electric Light, Heat & Power Co.,
G. Searing Wilson, President."

By the foregoing contract the plaintiff undertook to furnish and sell to the defendant two pairs of 42" turbine wheels with shafts and coupling as therein described for the sum of $9,900 f. o. b. cars at Lancaster, one pair of wheels with shaft and coupling to be shipped on or before June 1, 1907, and the other pair of wheels with shaft and coupling to be forwarded within thirty days thereafter, and the purchase price to be paid as follows: 33⅓ per cent. on receipt of bill of lading; 33⅓ per cent. at the expiration of thirty days from date of bill of lading, and the balance "when the machinery is put in operation and tested as per guarantee." It is not altogether clear, in view of the fact that the total purchase price of $9,900 was not apportioned between the two shipments provided for, at what times the partial payments were to be made on account of those shipments respectively. Nor is it necessary under the circumstances disclosed in the case to decide this point. It safely may be concluded that under the contract 33⅓ per cent., or $3,300 of the purchase price was to become due not later than the date of the receipt of the bill of lading for the second shipment; the additional sum of $3,300 not later than the time of expiration of thirty days from the date of the second shipment; and the balance of the total purchase price immediately after the operation and testing of the machinery for the purpose of ascertaining its conformity or non-conformity to the requirements of the "guarantee"; the time limited for testing and the making of the last payment not to exceed four months "from date of bill of lading," which certainly cannot be later than the date of the bill of lading for the second shipment. It appears from the record that no portion of the machinery contracted for was shipped by June 1, 1907, or at or before the time of the expiration of thirty days thereafter, or, indeed, until July 29, 1907, when the plaintiff commenced making shipments of various parts of the machinery. The shipment of the first pair of turbine wheels with their shafting and coupling was not completed until August 19, 1907, nor was the machinery so shipped received by the defendant until seven days later. The shipment of the second set of wheels, shafting and coupling was not completed until on or about September 5, 1907. There was testimony to the effect that the defendant in anticipation of the receipt within the stipulated time of the machinery contracted for had torn out certain machinery of its own and had seasonably made preparations for the installation of the machinery to be furnished by the plaintiff. It further appears that prior to the bringing of suit the plaintiff had received from the defendant $3,300 on account of the total purchase price and that the plaintiff sued for the unpaid balance.

At the trial the defendant, for the purpose of establishing a counterclaim against the plaintiff for damages for delay in shipping the machinery contracted for, made two offers of proof which were denied by the court below. The denial of these offers furnishes the ground for two of the assignments of error. The third and remaining assignment of error is based upon a portion of the charge delivered to the jury. The several assignments of error are as follows:

"1. The court erred in refusing defendant's offer of proof, which was as follows:

'Mr. Johnson: I offer to prove that the works of the defendant are works engaged exclusively in the manufacture of electric power; that they had a contract for the supply of kilowatt power not to exceed 750 kilowatts per hour to a responsible company, the Edison Electric Company, which wanted the whole of that power; that their old works were insufficient to furnish that power and that they desired, therefore, to have these new wheels for the supply of the 750 kilowatts power per hour; that it was necessary that the wheels be installed before October, owing to the fact that high water would then prevent their installation until the succeeding year; that all these facts, including the fact of the contract with the Edison Company and that it would affect the kilowatt power, were explained to the plaintiff company before the contract was made, and it was told the plaintiff company that if the wheels were not furnished within the time, they would be unable to be installed until the following year, and that the defendant would lose the ability to furnish this kilowatt power; that the loss to the defendant company by reason of the delivery of the wheels too late to enable the installation at the time, extending the installation into the next year before it could be made, was the loss on the second set of wheels alone of over seventy-five hundred dollars, being the loss of the net amount which would have been received from the kilowatt power which they had contracted for and which they were unable to furnish. This in connection with the testimony already in the case in the correspondence and as to what was done when the machinery was received; and also to prove that when the shipments came they came in detached pieces; that the second set of wheels was never put together, and that the plaintiff was notified that the defendant would not accept these machines until there had been a test to show that the machines were within the power, and that the test could not be made until the spring of 1908.'"

"2. The court erred in refusing defendant's further offer of testimony. Said offer and the ruling of the court thereon were as follows:

'Mr. Johnson: Then I offer so much of the testimony as shows the explanation to the parties before the contract was entered into, of the condition of affairs and the necessity of time, of the contract which had been made, and the necessity to perform it, and of the loss which would occur in case the delivery was not made in time.'"

"3. The learned judge erred in charging the jury as follows:

'Perhaps I may say at this point, with regard to both machines, that although the jury has heard something in the case with regard to the possible loss of profits upon the part of the purchaser, owing to the delay in furnishing the machines beyond the time fixed in the contract, and beyond the time fixed by the extension of the contract. I instruct you that you are to pay no attention to that matter at all; that the defendant is not entitled to set up a defense based upon asserted loss of profits. That is all I need say, because I am sure the jury will accept the instructions of the court on that subject and lay that matter entirely aside, even if you have it in your minds at all.'

To said charge defendant's exception was as follows:

'Defendant's counsel excepted to so much of the charge of the learned judge as instructed the jury that they could not take into consideration any damages for delay.'"

It is admitted that the verdict for the plaintiff negatived all charge of breach of warranty; and the substantial question before us is whether the defendant had a right to introduce evidence, as proposed

in the rejected offers of proof referred to in the first and second assignments of error, to establish a counter-claim against the plaintiff for damages for delay in shipping the machinery to the former. The portion of the charge to the jury referred to in the third assignment, in so far as excepted to by the defendant, also relates to the subject of damages for the defendant for delay.

The plaintiff contests on three grounds the asserted right of the defendant to establish a claim to such damages: first, that the contract expressly provides that "the acceptance of the machinery upon arrival shall constitute a waiver of all damages for delays"; secondly, that the amount of such profits as the defendant might have made under its alleged contract with the Edison Electric Illuminating Company, even aside from the above quoted provision of the contract, was not recoverable; and, thirdly, that no sufficient notice of such alleged counter-claim had been given by the defendant to the plaintiff. We shall consider at this point the first ground. What the parties to the contract intended by the words "the acceptance of the machinery upon arrival" must control the construction to be placed by this court upon those words, and in order to ascertain the intent of the parties in their use they must be read in the light of other provisions in the contract. Considered in and by themselves they doubtless would import a voluntary acceptance of the machinery upon arrival as satisfactory or in substantial conformity to the contractual requirements. But on an examination of the contract as a whole we are unable to attach to the word "acceptance" its usual meaning. The elementary rule, applicable as well to contracts as to statutes, that the various provisions should, as far as may be reasonable, be so read as to avoid repugnancy and to give to each term its appropriate effect, to the end that the instrument may be sustained in all its parts, requires, we think, that the word "acceptance" must be treated as equivalent only to "receipt" in the sense of a voluntary receipt, in contradistinction to a rejection of the machinery upon arrival. Unless the word "acceptance" be so read an irreconcilable inconsistency will be disclosed on the face of the contract. The balance of the purchase price was not to be due until "the machinery is put in operation and tested as per guarantee," a provision qualified only by the words "in any event the time of last payment is not to exceed four months from date of bill of lading." The warranties, referred to as guarantees, contemplated that the ascertainment of the conformity or non-conformity of the machinery to their requirements might extend over a considerable period. It is provided not only that the machinery should "operate and fill the requirements of this agreement, when used and operated under the conditions specified herein," but that if there were in the machinery "mechanical defects due either to faulty design or workmanship" the plaintiff would "furnish without charge any part or parts thereof, which may prove defective under such conditions, during a period of six months from date of putting machinery in operation." These provisions are palpably of such a nature as to render an acceptance by the defendant of the machinery upon arrival within the usual signification of that term unreasonable and practically impossible. For if there should be an acceptance upon arrival the defendant thereby would

wholly waive and discharge the plaintiff from all damages for nonconformity of the machinery to the requirements of the warranties. It is evident that the word "acceptance" must not be so read as to produce such a result, no opportunity having been afforded to the defendant to test the machinery. If, on the other hand, that word be held to mean a voluntary receipt of the machinery upon its arrival, the same to be held subject to testing, as provided for in the contract, all difficulty will disappear. Such receipt of the machinery could not under the terms of the contract discharge the plaintiff from the usual consequences of its non-conformity to the warranted excellence; but it well might discharge the plaintiff from "all damages for delays" and the waiver provided for extends no farther than to such damages. This construction of the contract cannot in any wise impose hardship upon the defendant. While the defendant upon the arrival of the machinery would not be competent to pass upon its conformity or nonconformity to the warranties, it would certainly know whether delay in its arrival beyond the time stipulated for its delivery would or would not defeat in whole or in part the purpose for which it had been ordered. The defendant had an election in view of the belated delivery either to refuse to receive the machinery and hold the plaintiff liable for all damages sustained through breach of contract, or in the exercise of its judgment, having knowledge of its own needs and purposes, to receive the machinery, thereby foregoing damages for delay, but retaining a right to hold the plaintiff in damages for non-conformity to the requirements of the warranties. Unless the defendant had at the time of contracting with the plaintiff a contract with the Edison Electric Illuminating Company it could not maintain a claim against the plaintiff for loss of profits on the contract with that company, there being nothing in the contract between the plaintiff and defendant authorizing generally the recovery of profits. The defendant better than anyone else could judge whether, under the circumstances and for the protection of its interests, it would be wise or unwise to receive the machinery, notwithstanding the delay. Having received and retained it, as appears in the record, the defendant is precluded from the recovery of damages for the delay. There is nothing in the correspondence between the parties to modify or affect the force of the provision relating to waiver of damages for delay. In view of the conclusion reached it is unnecessary to consider the other two grounds of contention on the part of the plaintiff. For the above reasons the judgment below must be affirmed with costs, and it is so ordered.

(172 Fed. 529.)

MASON v. NATIONAL HERKIMER COUNTY BANK OF LITTLE FALLS.

(Circuit Court of Appeals, Second Circuit. July 21, 1909.)

No. 279.

1. BANKRUPTCY (§ 159*)—PREFERENCES—ELEMENTS.

It is essential to a voidable preference in bankruptcy that the bankrupt shall have transferred some portion of his own property to the creditor.

[Ed. Note.—For other cases, see Bankruptcy, Cent. Dig. § 247; Dec. Dig. § 159.*]

2. BANKRUPTCY (§ 164*)—VOIDABLE PREFERENCE—PAYMENT BY INDORSER.

The S. Company in January received a bankrupt's note in payment for certain machinery and merchandise, which the S. Company indorsed and discounted at defendant bank. The note was renewed from time to time, being secured by the S. Company's collateral, in which the bankrupt had no interest until on September 26, 1903, before the maturity of the last renewal, the S. Company paid the note to the bank from its own funds, received back its collateral, and charged the amount to the bankrupt's account; the S. Company being then indebted to the bankrupt on such account in a sum in excess of the amount of the note, and within four months the adjudication was entered. *Held*, that such facts did not justify an inference that the note was paid by the bankrupt, or with its property, and hence the payment of the note by the S. Company was not a voidable preference as to the bank.

[Ed. Note.—For other cases, see Bankruptcy, Cent. Dig. § 267; Dec. Dig. § 164.*]

3. BANKRUPTCY (§ 154*)—SET-OFF—PURCHASE OF CLAIM BY CREDITOR.

Bankr. Act July 1, 1898, c. 541, § 68b, 30 Stat. 565 (U. S. Comp. St. 1901, p. 3450), provides that a set-off or counterclaim shall not be allowed in favor of any debtor of a bankrupt which was purchased by or transferred to him after the filing of the petition or within four months before such filing with a view to such use, and with knowledge or notice that the bankrupt was insolvent, or had committed an act of bankruptcy. *Held*, that where an indorser of a bankrupt's paper took it up within four months prior to bankruptcy, knowing that the bankrupt was insolvent, and for the purpose of setting it off against its debt to the bankrupt, it was not available as a set-off as against the bankrupt's trustee.

[Ed. Note.—For other cases, see Bankruptcy, Cent. Dig. § 454; Dec. Dig. § 154.*]

4. BANKRUPTCY (§ 164*)—PAYMENT OF DEBTS—EVASION OF ACT.

Where an indorser of a bankrupt's paper, well secured by the indorser's collateral, paid the paper to the bank, and charged the amount against its debt on open account to the bankrupt, equity did not require that the payment be held to constitute a preference to the bank by the bankrupt on the theory that the transaction was an evasion of the act.

[Ed. Note.—For other cases, see Bankruptcy, Cent. Dig. § 267; Dec. Dig. § 164.*]

Appeal from the District Court of the United States for the Northern District of New York.

Action by Charles B. Mason, as trustee in bankruptcy of the National Herkimer County Bank of Little Falls. From a decree of the District Court (163 Fed. 920) for complainant, defendant appeals. Reversed and remanded, with instructions to dismiss.

The complainant is the trustee in bankruptcy of the Newport Knitting Company, a corporation under the laws of the state of New York, and lately engaged in the business of manufacturing knit goods at Newport, Herkimer coun-

ty, N. Y. The defendant is a national bank, located and doing business at Little Falls in said county, and some 22 miles from Newport. The Titus Sheard Company is a New York corporation, which, like the Newport Company, was engaged in the business of manufacturing knit goods, and was located at said Little Falls. The Sheard Company and the Newport Company, while maintaining distinct and separate corporate organizations, were closely associated in business, and had to some extent the same stockholders and officers. Neither corporation, however, owned any shares in the other, and it does not appear that the same persons owned controlling interests in both corporations. The Sheard Company was a customer of the defendant bank, kept its deposit account with it, and discounted its own paper and that received from persons dealing with it. The Newport Company was never a customer of the defendant bank.

On January 7, 1901, the Newport Company gave the Sheard Company its four months' note for $5,773.05 in payment for certain machinery and merchandise purchased. The Sheard Company indorsed this note, and discounted it for its own benefit at the defendant bank. The note was reduced by partial payments to $5,000, and was renewed with the same indorsement from time to time until May 11, 1903, when it was again renewed for four months so as to mature September 11, 1903. On August 22, 1903, however, and before the maturity of said note, it was taken up through the action of the Sheard Company by a new three months' note likewise indorsed by said Sheard Company and secured by collateral deposited by said company. The collateral consisted of accounts receivable amounting to $6,300 belonging to the Sheard Company, and in which the Newport Company—the maker of the note—had no interest. On September 26, 1903, and before the maturity of the last-mentioned note, the Sheard Company paid $4,953.33 to the defendant bank, being the amount of said note—$5,000—less unearned interest, took up the said note, and received back its collateral. The Sheard Company made this payment upon its own initiative and in its own behalf by cheque drawn upon funds belonging wholly to it. At the time when the Sheard Company paid and took up said note and collateral, it was indebted to the Newport Company upon open account in a sum in excess of the amount of said note. Upon taking up said note it credited the amount paid—$4,953.33—to itself upon its account with the Newport Company. This was done with the knowledge and approval of the Newport Company, but not—so far as appears upon the record—with the knowledge of the defendant. In August, 1903, when the Sheard Company substituted the three months' collateral note in place of the existing four months' note which was merely indorsed, it was otherwise largely indebted to the defendant bank upon its own and indorsed paper, and at that time made an agreement with the defendant whereby it practically pledged all its property as security for such indebtedness. On January 23, 1904, and within four months after the taking up of the last note by the Sheard Company as aforesaid, the Newport Company was adjudged a bankrupt.

The District Court, in accordance with the claims of complainant, held that the last-mentioned transaction amounted to a preference under section 60 of the bankruptcy act (Act July 1, 1898, c. 541, 30 Stat. 562 [U. S. Comp. St. 1901, p. 3445]), which, so far as is relevant here, reads as follows: "A person shall be deemed to have given a preference if, being insolvent, he has, within four months before the filing of the petition, or after the filing of the petition and before the adjudication, procured or suffered a judgment to be entered against himself in favor of another person, or made a transfer of any of his property, and the effect of the enforcement of such judgment or transfer will be to enable any one of his creditors to obtain a greater percentage of his debt than any other of such creditors of the same class."

Myron G. Bronner (Albert M. Mills, of counsel), for appellant.

Cookinham & Cookinham, for appellee.

Before LACOMBE, COXE, and NOYES, Circuit Judges.

NOYES, Circuit Judge (after stating the facts as above). The one thing absolutely essential to a preference is that the bankrupt transfer

some portion of his property to the creditor. If the creditor receive none of the bankrupt's property, there is no preference. And that is the primary difficulty with the complainant's case. The defendant bank received no property or money of the Newport Company. The Sheard Company as indorser of the note took up and paid its own funds therefor—funds in which the Newport Company had no interest whatever. It is true that the Sheard Company at the time it paid the note was indebted to the Newport Company, but that in no sense made its funds the property of the latter. An unsecured creditor has no interest in his debtor's property until he has sequestered it. The money which the defendant received belonged to the Sheard Company, and not to the bankrupt. It follows, then, that there was no preference unless that which was actually done can be treated as the equivalent for something else. And that is the theory of the District Court's decision. It is pointed out that, if the Newport Company had collected its claim from the Sheard Company and had itself paid the note, there would have been a transfer from the Newport Company to the bank. And it is said that it was merely a short cut for the Sheard Company to pay the note and charge the amount paid upon its account against the Newport Company—that the effect of the two transactions was the same. There would be much force in this argument if the Sheard Company stood in the transaction merely as a debtor of the Newport Company. It may well be that when a debtor with the approval of his creditor takes up the latter's note at a bank, and offsets the amount paid upon his debt, the payment to the bank will be treated as having been made by the creditor; the debtor being really his agent in the transaction. But that was not the situation here. The Sheard Company was the indorser of the note, and had pledged its own property as security therefor. In taking up the note and collateral it acted in its own behalf, and in no sense as the agent of the Newport Company. The note was not discharged. The Sheard Company as against the Newport Company became the holder instead of the bank. Upon no permissible theory in law or equity can it be said that the note was paid by the Newport Company.

But it is further urged that the effect of the transaction was to appropriate certain assets of the Newport Company, to wit, its demand against the Sheard Company, to the payment of this note to the exclusion of other creditors. As already pointed out, however, this ultimate result would not make the transaction a preference; the Sheard Company alone dealing with the bank and acting in its own interest. But it cannot be conceded that the result claimed would follow. If the Sheard Company, knowing the Newport Company to be insolvent, acquired the note with a view to using it as a set-off or counterclaim against its debt, it could not legally do so. Bankruptcy Law, § 68b. And, if the Sheard Company could not offset the note against the account of the Newport Company, there was no transfer or appropriation of such account, and much less a preference. The debt could still be collected by the trustee of the Newport Company and used for the benefit of all the creditors.

Finally, it is contended, in substance, that equity requires that the decree be permitted to stand—that the whole transaction was an eva-

sion of the bankruptcy act. We see no basis for this contention. The note which was paid was apparently well secured by the indorser's collateral. There was no reason why it should not have been paid in full. The bank received no more than it was entitled to without looking to the bankrupt's property at all. It cannot be said that equity requires us to affirm a decree compelling a bank to pay back to the trustee of the maker of a note money received from an indorser, and upon the payment of which it surrendered collateral deposited by such indorser.

The decree of the District Court is reversed, with costs, and the cause is remanded, with instructions to dismiss the bill, with costs.

(172 Fed. 532.)

BACON v. CONROY.

(Circuit Court of Appeals, Second Circuit. June 15, 1909.)

No. 272.

1. ADMIRALTY (§ 73*)—DOCUMENTARY EVIDENCE—SHIP'S LOG.

It is the better practice to introduce the log of a vessel in evidence, after being duly authenticated, to prove facts stated therein, rather than to rely on the testimony of the officer who made the entries after reading the same, when much time has elapsed, and the facts are of such a character, that he cannot be supposed to have any independent recollection of them.

[Ed. Note.—For other cases, see Admiralty, Dec. Dig. § 73.*]

2. SHIPPING (§ 153*)—ACTION TO RECOVER FREIGHT—SUFFICIENCY OF EVIDENCE.

Evidence *held* sufficient to sustain a finding that the weight of a cargo of chalk carried by a vessel was in excess of that reported by the consignee and on which freight was paid.

[Ed. Note.—For other cases, see Shipping, Dec. Dig. § 153.*]

Appeal from the District Court of the United States for the Southern District of New York.

Wing, Putnam & Burlingham (James Forrester, of counsel), for appellant.

Wheeler, Cortis & Haight (John W. Griffin, of counsel), for appellee.

Before LACOMBE, COXE, and WARD, Circuit Judges.

WARD, Circuit Judge. The libelant chartered the steamer Fortuna to the respondent's testator to carry a cargo of block chalk from Dunkirk to Philadelphia. The bill of lading though calling for 4,300 tons contained the clause "weight unknown." On arrival the cargo was discharged in tubs and removed by the consignee to some point in the city of Philadelphia where it was weighed. Freight was paid on 3,725 tons. Some six months afterwards this libel was filed, claiming freight on 275 tons in addition.

Several methods are pursued to show that the actual weight of the cargo delivered was not less than 4,000 tons. First, two sizes of tubs

were used, one weighing 1,600 and the other 800 pounds when loaded. The only witness who gives the figures of the tally is the captain, who, reading them from a letter signed by him, the chief officer, and the chief engineer, date not stated nor person addressed, says 5,685 of the large and 572 of the small tubs were discharged. The theory was that the master refreshed his recollection by looking at this letter; but he is not shown to have had any personal knowledge of the tally at all.

The trouble with this calculation is that there is no legal proof of the tally. It was kept from August 26th, the day of arrival, to September 1st, by the second mate at one end of the vessel and the boatswain at the other, and from September 1st to September 9th by a new second mate and the boatswain. The only one of these men produced as a witness, who had personal knowledge, is the original second mate, who tallied at one end of the ship between August 6th and September 1st.

No explanation is offered why the master, having these facts and figures within reach, did not at the time of discharge, when witnesses were at hand and recollection fresh, raise the question whether the amount of freight paid by the consignee was correct. This is the time when such questions should be settled.

The next method is to compare the draft of the vessel at the time of arrival, 22 feet 3 inches, with her loading or displacement scale, deducting other weights than the cargo contained in her. These consisted of boiler water, fresh water, coal, and stores. Allowing for weights other than cargo and for the difference between the specific gravity of the water at Philadelphia and water at sea, the vessel should have had on board according to her loading scale, the accuracy of which was proved by the chief engineer Iverson, cargo weighing over 4,000 tons. The foregoing calculation is corroborated by comparing the weights on board after the discharge of the cargo with the loading scale at the then draft of 11 feet.

The chief engineer testifies that entries in the engineer's log made by him as to the weights of the coal, fresh water, boiler water, and stores on arrival and of the same articles together with the water ballast after discharge of the cargo were to his knowledge correct at the time they were made. The theory was that by looking at the log he refreshed his recollection; but this was evidently not so. He had after looking at the log no revived or independent recollection, but could only say that he knew the entries when made were correct. The log was only marked for identification. We think it would have been better practice to offer the entries in evidence. Howard v. McDonough, 77 N. Y. 592; National Ulster County Bank v. Madden, 114 N. Y. 281, 21 N. E. 408, 11 Am. St. Rep. 633.

While the proof is not of a very satisfactory character, we think the district judge was justified in finding that a prima facie delivery of at least 4,000 tons of chalk was made out, especially in view of the fact that the respondent offered no evidence whatever as to the actual weight of the cargo at Philadelphia if it was weighed, or how

the freight was estimated if the cargo was not weighed, or that it was not within his power to make such proof.

The decree is affirmed, without interest or costs.

NOTE.—The following is the opinion of Adams, District Judge, in the court below:

ADAMS, District Judge. This was an action to recover a balance of freight alleged to be due under a charter party of the steamship Fortuna, dated July 26, 1905, between the libellant and respondent's firm of John D. McGlincey & Company. Under this charter, the steamer was to transport a cargo of block chalk, not exceeding 4,300 tons from Dunkirk, France, to Philadelphia, at the rate of 7 shillings and 9 pence per ton of 2,240 pounds, captain to sign bills of lading as presented. Pursuant to the contract, a cargo was duly loaded at Dunkirk and delivered to the consignees in Philadelphia. The captain signed bills of lading therefor, as ordered by the charterers. The cargo was delivered in conformity with the bills of lading. It is alleged that freight was duly paid on 3,725 tons, leaving a balance of 275 tons, upon which freight should be paid, but is refused.

The pleaded defense is a denial that the cargo amounted to 4,000 tons and the libellant was left to make such proof as he could of the quantity on board.

The case was not tried in court. The depositions of the master, the chief engineer and the mate were taken, however, and produced. I have read them carefully. Their testimony was objected to because the witnesses, particularly the master, used the ship's logs in giving it, but it appears they were not testifying from the logs, but from their memories as refreshed by them and these objections should therefore be overruled.

The master's testimony showed that he signed bills of lading for 4,200 tons, but the statement of the amount was coupled with an acknowledgment that he signed "weight unknown" and he said he did not in fact know what the weights were. The libellant claims that the bill of lading amount was checked by the ship's tally when loading, but the only evidence of this was the master's statement, that "the mate always takes the number of the cars in loading," which obviously is of no value when the sufficiency of legal evidence is questioned.

It was attempted to establish the weights from the draft of the ship. That involved giving reasonably accurate computations of the weights of coal, water, fresh and boiler, and stores on board before and after discharge. The weight of the coal was established by the testimony of the engineer. Some calculations have been made of the weights of the cargo in connection with what is called the "Builders' scale." That was objected to as not being properly proved and not competent. When it was introduced the first objection was good, but the subsequent testimony of the chief engineer established its correctness and I think it then became competent. The draft of the steamer at sea before discharge was 22 feet, 3 inches, from which should be deducted 3 inches for the fresh water she was in at Philadelphia. By the builders' scale it appears that a load of 4,350 tons is required to give the ship a mean draft of 22 feet. When she was at that draft, she had on board 209 tons of weight other than cargo, which was therefore 4,141 tons, corresponding, substantially, with the bill of lading weight. The testimony shows that the weights of the items of cargo were as follows:

	Before discharge tons.	After discharge tons.
Coal	143	262
Fresh Water	12	10
Boiler water	38	38
Stores, lumber	16	16
Water ballast	...	493
	209	819

The exact weight of cargo does not appear, but there is sufficient to show that a greater quantity was on board than paid for and more than the claim here.

No evidence of any kind has been offered by the respondent, nor has any oral argument or brief been submitted by him, or assistance of any kind been given by him to the court, which has been left to ascertain the facts as best it could from the proofs submitted by the libellant, aided by his able brief. I think in the absence of any contradiction of the libellant's proofs, the court is required to deduce from them that the weight of the cargo was at least 4,000 tons. As the respondent has paid for 3,725 tons, a balance remains of 295 tons, which at the charter rate makes, with the exchange at $4.86, $517.59, for which amount, with interest, the libellant should have a decree.

(172 Fed. 535.)

SEXTON v. KESSLER & CO., Limited, et al.

(Circuit Court of Appeals, Second Circuit. May 14, 1909.)

No. 263.

BANKRUPCY (§ 163*)—VOIDABLE PREFERENCES—TRANSFER OF PROPERTY—DELIVERY PURSUANT TO PRIOR LIEN.

A New York banking house, by agreement, and in order to provide security for drafts drawn by it in the course of business on its correspondent in Manchester, England, placed certain stocks and bonds either transferable by delivery or indorsed in blank in an envelope in its safe deposit vaults marked "Escrow, for account of" the Manchester house, which was furnished with a list of the securities giving their market value. The New York house also entered the transfers on its books and with permission of the Manchester house, from time to time, withdrew certain of the securities and substituted others of equal value. The arrangement was made in entire good faith and continued for a number of years, when the New York house, having then outstanding unprotected drafts, and its condition having become uncertain by reason of a panic, delivered the securities to an agent of the Manchester house and within four months thereafter was adjudged a bankrupt. *Held:* That the Manchester house had an equitable lien on the securities while in the possession of its debtor in the nature both of a mortgage and an agreement for a pledge which gave it the right to take possession of the same at any time; that, when it took possession, it did so by virtue of such prior right, and its title was that of mortgagee and pledgee, relating back to the time of the original transaction, and did not constitute a transfer of property within four months of the bankruptcy, which could be avoided as a preference under Bankr. Act July 1, 1898, c. 541, § 60b, 30 Stat. 562 (U. S. Comp. St. 1901, p. 3445).

[Ed. Note.—For other cases, see Bankruptcy, Dec. Dig. § 163.*]

Appeal from the District Court of the United States for the Southern District of New York.

See, also, 165 Fed. 508.

McLaughlin, Russell, Coe & Sprague (Abram I. Elkus, Frederick C. McLaughlin, and Rufus W. Sprague, Jr., of counsel), for appellants.

John Larkin and J. Frankenheimer, for appellee.

Before LACOMBE, WARD, and NOYES, Circuit Judges.

WARD, Circuit Judge. Kessler & Co., of New York, engaged in the business of banking and foreign exchange, had for a long time drawn upon Kessler & Co., Ltd., of Manchester, without giving any

security for payment of its drafts. Early in 1903 the Manchester house wrote the New York house as follows:

"We beg to refer to the question of your providing security for the drawing credit which you have with us, which has already been privately touched upon. We understand from Mr. Edward Kessler that it would not be very convenient for you to provide this immediately, and as we in no way wish to incommode you, although from the altered circumstances of this firm it is a matter of some importance to us, we propose to give you until the 30th of June of this year, by which date the necessary securities should be set aside for us and a list sent to us. We do not propose to name a fixed amount of credit. Suffice it to say that what you are at present using seems large, and rather than an increase we should like to see it somewhat reduced.

"We trust that you may be able to give effect to our wishes even sooner than the date we stipulate for."

In accordance with this letter the New York house, on June 30th, wrote the Manchester house:

"In accordance with instructions from Mr. Alfred Kessler, we have to-day placed in a separate package in our safe deposit vaults the following securities, package marked 'Escrow for account of Kessler & Co., Limited, Manchester':

1,484 shares Oklahoma Gas & Electric Co., at 25	$ 37,100
2,428 shares United Lighting & Heating Co., at 12	29,136
2,352 shares Daimler Manufacturing Co., at 50	117,600
$373,000 United Breweries Co. first 6's, at 65	242,245
	$406,081

"This escrow is intended as a protection against our long drawings against your good selves."

July 8th the Manchester house replied as follows:

"We are in receipt of your favor of 30th ultimo, in which you advise us of the securities you have laid aside as security for your long drawings on us. We have noted the particulars as given up to us and the matter goes in order. If at any time you have the opportunity of realizing these securities or any part of them, you are at liberty to take them and to replace them by others of equal value, though in that case we should of course like to see rather better quality."

December 23, 1903, the Manchester house wrote to the New York house as follows:

"For the purpose of the audit of our books for our yearly balance sheet, we should feel obliged if you would send us, in the form of a certificate, the particulars of the securities you have set aside against your drawing credit with us. We should like this done annually on the 31st December. We do not think the matter will present any difficulty for you. Something in the form of the inclosed is what we require. * * * We certify that we have specially set aside and hold for your acct. on this, the 31st day of December, '03, as security for the drawing credit which you accord us, the following securities: * * * Name secs. and market value."

The New York house not only conformed to these directions, but, in addition, entered the securities so set aside and all substitutions of them on their loan book and notified the Manchester house of substitutions made from time to time. The securities were always either negotiable by delivery or indorsed in blank. The two houses did business in strict conformity with the foregoing arrangement until the fall of 1907, when a financial panic occurred in the city of New York. October 25th the stability of the New York house being in doubt, it de-

livered to an agent of the Manchester house then in New York City the escrow securities, which he deposited in a safe deposit company in the name of the Manchester house. November 8th a petition in bankruptcy was filed against the New York house, and November 27th it was adjudicated a bankrupt.

This is an action in equity brought by the trustee in bankruptcy to set aside the transfer of the securities because made within four months prior to the filing of the petition; the New York house being insolvent, and the Manchester house knowing, or having reason to know, that fact, and the intention being to give it a preference. The matter was referred to a master, who found in accordance with the prayer of the bill, and his report was confirmed by the district judge, from whose decree this appeal is taken.

The master and the district judge both held the transaction in question to be a pledge or an agreement to pledge the escrow securities, and that the delivery of them under the circumstances stated in the bill within four months of the filing of the petition in bankruptcy constituted a voidable preference under the bankrupt act. It may be admitted that the conclusion so reached was entirely right if the arrangement is to be regarded as a pledge or a promise to pledge; possession being essential to the existence of a pledge. This relieves us from the necessity of examining authorities relating to pledges. A word, however, may be said as to the cases of Casey v. Cavaroc, 96 U. S. 467, 24 L. Ed. 779, Casey v. National Bank, 96 U. S. 492, 24 L. Ed. 789, and Casey v. Schuchardt, 96 U. S. 494, 24 L. Ed. 790, upon which the appellant especially relies. In the second case a receipt was given by the bank which might have been treated as a declaration of trust; but the defendant relied on its rights as a pledgee. What Mr. Justice Bradley said in the last case was undoubtedly true of all the cases:

> "As the only claim made by Schuchardt & Sons in their answer to the securities in question is by way of pledge, and as there was no such delivery and retention of possession by them or their agents or trustees as the law requires to constitute the privilege of a pledge as to third persons, their claim cannot be sustained."

The intention to secure is plain; but this could have been accomplished not only by a pledge, which is the usual course of business in case of choses in action, but by a mortgage or by a trust. It can hardly be doubted that a formally executed declaration of trust as to specific securities by the New York house in favor of the Manchester house would have been good. The New York house, although the maker of the trust, could have properly acted as the trustee (Locke v. Trust Co., 140 N. Y. 135, 35 N. E. 578), to the extent of the trust, viz., the protection of the Manchester house for its acceptances.

As the transaction was a perfectly honest one, a construction should be adopted to give it effect, if that is possible. In their correspondence the parties used neither the words "mortgage," nor "pledge," nor "trust," but the inapt word "escrow," which they probably did not understand. What they did, however, clearly evidences their intention. The credit to be given to the New York house was not to depend alone upon its strength, but also upon additional security to be given to the Manchester house. The New York house, being the absolute owner

of certain specified securities, agreed, in accordance with the requirement of the Manchester house, to hold them for its account, and to that end both segregated them from their other securities and entered them upon their books as so appropriated. The Manchester house as the equitable owners authorized the New York house to withdraw the specified securities from time to time for their own purposes not absolutely, but upon condition that they should substitute securities of equal value, which was always done. There were, accordingly, during the whole period of this credit, specified earmarked or traceable securities held by the New York house for account of the Manchester house. The use of the word "collateral" does not necessarily indicate a pledge. It is important only as showing that the Manchester house's ownership of or interest in the securities was only for the purpose of protecting it for accepting the drafts of the New York house.

Considering the family relation and the long business dealing between the two houses, and the fact that they were dealing 3,000 miles apart, and that they had entire confidence in each other, the arrangement made was natural and reasonable. It was sufficiently precise to protect the Manchester house and elastic enough to meet the ordinary requirements of the business of the New York house.

If the transaction had been a mortgage of the securities, the delivery of them October 25, 1907, would have been good as against the trustee in bankruptcy because under the law of the state of New York mortgages of choses in action need not be filed. Lien Law (Laws 1897, p. 536, c. 418) § 90; Humphrey v. Tatman, 198 U. S. 91, 25 Sup. Ct. 567, 49 L. Ed. 956. Doubtless a court of equity would not intervene to enforce or perfect an imperfect mortgage as against the other creditors of the mortgagor; but no such assistance would have been needed, the mortgagor having voluntarily carried out the purpose of the mortgage by delivering the securities to the mortgagee. This would have been legal, notwithstanding the insolvency of the mortgagor and the knowledge of that fact by the mortgagee. Hauselt v. Harrison, 105 U. S. 401, 26 L. Ed. 1075; Wood v. U. S. Fidelity Co. (D. C.) 143 Fed. 424.

So in the case of trust receipts the courts of New York have been astute to carry out the intention of the parties. The course of business is as follows: A banker gives a letter of credit to the purchaser of goods to enable him to pay for them upon condition that bills of lading to the banker's order for the goods shall be delivered to him, accompanied by a draft upon the purchaser. Upon arrival of the goods the banker delivers the bill of lading to the borrower; he executing a trust receipt to hold or sell the goods as the property of the banker for his benefit. Without defining exactly what the relation between the lender and the borrower is as to the goods—that is, whether it is that of mortgagor and mortgagee or of pledgor and pledgee, or a conditional sale—the courts have steadily protected the right of the lender in the goods so delivered. Farmers' & Mechanics' Bank v. Logan, 74 N. Y. 568; Moors v. Kidder, 106 N. Y. 32, 12 N. E. 818; Drexel v. Pease, 133 N. Y. 129, 30 N. E. 732.

We regard the transaction in question as a declaration of trust in respect to the escrow securities by the New York house in favor of the Manchester house. Being the absolute owner of the securities, it

declared in consideration of its right to draw that it held and would hold the same and all securities subsequently substituted therefor for the benefit of the Manchester house. From that moment the legal title was in the New York house, but the equitable in the Manchester house; the New York house holding the securities in a fiduciary capacity. This was the condition on which the Manchester house gave the drawing credit which continued for several years, and it was because of its ownership that its authority to substitute securities was needed and was given.

We do not apprehend that this conclusion will result in the consequences foretold by the appellee. The public was not giving credit to the New York house on the strength of its apparent ownership of these securities because it knew nothing at all about them. The visible possession of chattels apparently owned by the possessor creates a wholly different situation. In respect to such property the law prohibits secret liens as against creditors. Yet ownership of chattels where there has been no change of possession will be protected if they are set apart and marked and in this way notice given to the public. First National Bank v. Pennsylvania Trust Co., 124 Fed. 968, 60 C. C. A. 100. There was, however, as to the securities under consideration, no secrecy which was not inherent in their nature. The public does not know what stocks, bonds, or notes a merchant has, and therefore does not give him credit because of them. There is no evidence that any exhibition of or statement as to these securities was made to any one by the New York house for the purpose of obtaining credit. Their books, if examined, would have shown what the real dealing between them and the Manchester house was.

If there had been no insolvency, and the New York house had withdrawn securities without substituting others, a court of equity would have compelled it to do so, or at least would have enjoined it from making such withdrawals, at the suit of the Manchester house. If, having failed to cover its drafts, the New York house had refused to deliver the securities to the Manchester house, a court of equity would have compelled it to do so. In delivering the securities to the Manchester house October 25, 1907, the New York house acted without the compulsion of a court of equity in strict accordance with the trust it had declared four years before, when entirely solvent. For the first time in that course of dealing there was an expectation that the New York house would not cover its drafts; that the Manchester house would have to pay them and would need to realize upon the securities which the New York house held for its protection. No new right or privilege was then created voidable under the bankrupt act. The delivery of these earmarked securities was in strict pursuance of the agreement made long before on the strength of which the credit was given. Sabin v. Camp (C. C.) 98 Fed. 974, cited with approval in Thompson v. Fairbanks, 196 U. S. 516, 524, 25 Sup. Ct. 306, 49 L. Ed. 577. A liberal construction should be given to these transactions in aid of the obvious intention of the parties.

The decree of the court below is reversed with costs.

NOYES, Circuit Judge (concurring). While I concur in the result reached by Judge WARD, I am constrained to base my conclusions

upon essentially different grounds; and the case is of such importance, both on account of the amount in controversy and the principles involved, that a separate opinion seems called for.

In considering the case from any point of view, one thing is apparent from the outset, and that is the good faith of the parties. Another thing is also apparent. The New York house intended that the securities in question should afford protection to the Manchester house for their acceptances, and the latter supposed that they were obtaining protection. Both parties acted upon the assumption that that which they did accomplished something. The New York house furnished security in the form desired by the Manchester house and the latter accepted the former's drawings upon that security. The transaction, if invalid, is only so because it contravenes some statute or positive legal principle; and it cannot be declared invalid without inflicting great hardship upon the Manchester house.

In determining the validity of the transaction, it is necessary, in the first place, to ascertain what its legal nature was. Judge WARD has held that it amounted to a declaration of trust by the New York house in favor of the Manchester house; but I cannot accept this conclusion. It is an essential element in a declaration of trust that title pass from the declarant of the trust as an individual to himself as trustee. It must be shown that he intends to divest himself of the beneficial interest in the property and to hold it thereafter as a trustee for the benefit of another. Now it is clear from the evidence that this is just what the New York house did not intend to do. They intended to set aside the obligations only as security for their indebtedness to the Manchester house. In case this indebtedness were paid, the latter were to have no interest in the security. The beneficial interest in the property, the equity of redemption, instead of passing to the Manchester house, as would be essential in a declaration of trust, was intended by both parties to remain in the New York house. The initial setting aside of the securities and the course of dealing between the two houses were, in my opinion, wholly inconsistent with the creation or existence of a declaration of trust. The transaction must stand, if at all, as one in which the Manchester house obtained security only.

Now security might have been afforded either by way of mortgage or pledge. The general distinction between a mortgage and a pledge is that in one the title passes, but not necessarily the possession; while in the other the title does not pass, but the possession must. A pledge is a mere lien and something less than a mortgage. As said by the Master of the Rolls in Jones v. Smith, 2 Ves. Jr., 372:

> "A mortgage is a pledge and more, for it is an absolute pledge to become an absolute interest if not redeemed at a certain time."

In this case, the bonds, certificates of stock, promissory notes, and other securities were duly indorsed and assigned so that when Kessler & Co. of Manchester took possession of them shortly before the bankruptcy proceedings the title to them passed even if it had not done so before. Under these conditions there is the highest authority for saying that, when the Manchester house received the securities so indorsed and assigned, it had a double title to them—that of mortgagee and

pledgee. In the very case principally relied upon by the defendants (Casey v. Cavaroc, 96 U. S. 467, 477, 24 L. Ed. 779), the Supreme Court of the United States, in speaking of a case where bills receivable had been both pledged and assigned to a creditor, said:

"In such case they [the securities] are held by the creditor by way of mortgage as well as pledge, and a mortgage is valid notwithstanding the mortgagor has the possession. The difference ordinarily recognized between a mortgage and a pledge is that the title is transferred by the former, and possession by the latter. Indeed, possession may be considered as of the very essence of a pledge (Pothier, Nantissement, 8); and, if possession be once given up, the pledge, as such, is extinguished. The possession need not be actual. It may be constructive, as where the key of a warehouse containing the goods pledged is delivered, or a bill of lading is assigned. In such case the act done will be considered as a token, standing for actual delivery of the goods. It puts the property under the power and control of the creditor. In some cases such constructive delivery cannot be effected without doing what amounts to a transfer of the property also. The assignment of a bill of lading is of that kind. Such an assignment is necessary, where a pledge is proposed, in order to give the constructive possession required to constitute a pledge; and yet it formally transfers the title also. In such a case there is a union of two distinct forms of security; that of mortgage and that of pledge; mortgage by virtue of the title, and pledge by virtue of the possession.

"This advantage exists when notes and bills are transferred to a creditor by way of collateral security. His possession of them gives them the character of a pledge. Their indorsement if payable to order, or their delivery if payable to bearer, gives him the title also, which is something more than a pledge. This double title existed in White v. Platt, 5 Denio (N. Y.) 269, and in Clark v. Iselin, 21 Wall. 360, 22 L. Ed. 568. Hence the actual possession of the securities by the creditor was a matter of less importance in those cases."

I fully appreciate that this language of the Supreme Court seems in conflict with the generally accepted doctrine that a pledge of choses in action does not necessarily become a mortgage because the title is conveyed. In the case of a chose in action there cannot well be a pledge without an assignment. Thus, if negotiable paper does not require indorsement, title passes to the pledgee upon delivery; if indorsement is necessary, the fact that it is made does not, it is generally held, necessarily make the transaction a mortgage. In such a case it is necessary that the pledgee should have the title in order to obtain effectual security. Consequently, it has usually been said in the case of indorsed shares of stock and negotiable paper that whether a transaction should be regarded as a mortgage or a pledge must be determined from the agreement between the parties.

Accepting this latter view as correct, there is much to support the contention that the parties in this case intended something more than a pledge. They used the word "escrow," which has usually to do with the passing of title. The securities were delivered to the Manchester house as being its property, and they had previously been set aside and marked with its name. But I think it unnecessary to determine whether the transaction was a mortgage or a pledge. It is sufficient to say, in view of the decision of the Supreme Court, as well as in view of the facts shown in addition to the indorsements indicating a mortgage, that the Manchester house, after taking possession, may safely be regarded as holding both by way of mortgage and by way of pledge.

Indeed, the case of Casey v. Cavaroc, supra, would seem to afford authority for the conclusion that the transaction might be valid as a mortgage even if Kessler & Co. of Manchester had not taken actual possession of the securities before the bankruptcy. As shown in the extract from the opinion already quoted, the matter of the physical possession of securities is of less importance when they are so indorsed that title will pass than when there is a mere attempted pledge. And in another part of the opinion the court said (96 U. S. 486, 24 L. Ed. 568):

"It must not be overlooked that the Crédit Mobilier has no other claim to the securities in question but that of pledge. A pledge, and possession, which is its essential ingredient, must be made out, or their privilege fails. An agreement for a pledge raises no privilege. There is no mortgage, for the title of the securities was never transferred to them. The evidence of the cashier is that they were all stamped payable to the order of the bank, when discounted. They were not indorsed by the cashier until the day they were removed by Cavaroc, which was after the bank had failed."

Moreover, were the fact of taking possession absent in this case, it would probably be possible to sustain the claim of the Manchester house to the securities upon broader and more satisfactory lines than could be drawn from the distinction just referred to. The legal difference before delivery of indorsed and unindorsed securities, except in the case of special indorsements, would seem to be slight; but the equities of the case, coupled with what the parties did, aside from any technicality, make out a strong case in support of an equitable lien in the nature of a mortgage upon the securities in favor of the Manchester house, valid against the trustee in bankruptcy without a change of possession. It is unnecessary, however, to determine the case, nor to consider it at length, upon the theory that there was no change of possession because, as we have seen, the Manchester house did take possession of the securities, and such act is a factor of importance, and, as already shown, after the Manchester house took possession it held the securities both by way of mortgage and by way of pledge.

Now, there being no fraud in the transaction and no rights of purchasers or attaching creditors having intervened, the taking possession of the securities by the Manchester house before the bankruptcy was, in the absence of a statute making it unlawful, entirely legal and proper. Regarded simply as a pledge, the pledgee had the right to take possession. Thus in Parshall v. Eggert, 54 N. Y. 18, the court said:

"In the absence of any intermediate right, the parties could perfect a written contract of pledge by subsequent delivery. Even between successive pledgees, without any communication with each other, that one who lawfully obtains possession, at the time of the pledge or subsequently, is entitled to be preferred. * * * A creditor who acquires a specific right to or lien on the thing pledged may prevent the pledgee's interest in an undelivered chattel from attaching; but such is not the condition of the creditor at large. The only ground on which he can claim to prevent the perfecting of such a right in the pledgee is that it works a fraud upon him."

And in Jones on Pledges (2d Ed.) § 38, it is said:

"A pledge or contract for a pledge, ineffectual for want of delivery, may be rendered valid by a subsequent delivery, even as against an intermediate creditor at large of the pledgor. Of course, such subsequent delivery would not

prevail against a creditor who had, between the time of the making of the contract and taking possession under it, acquired a specific lien upon the thing pledged by attachment or levy of execution. The only other obstacle which could prevent such a transaction from being effectual would be the intervention of fraud."

When therefore the Manchester house obtained possession of the securities, it lawfully held them as pledgee and mortgagee, unless its rights were affected by some statute; and the only statute which it claimed to operate against it is the provision of the bankruptcy act (Act July 1, 1898, c. 541, § 60b, 30 Stat. 562 [U. S. Comp. St. 1901, p. 3445]), making transfers of property made under certain conditions within four months of bankruptcy unlawful preferences. So the primary question whether the act applies in this case is whether, within its meaning, the securities in question were transferred within four months of the bankruptcy. If they were not so transferred, there was no preference, and the determination of the question of time will dispose of all questions concerning the securities constituting the general escrow.

Manifestly at some time there was a transfer of the securities. When did it take place? If it took place at the time the parties intended to charge the securities for the benefit and protection of the Manchester house, when they were put aside and indorsed, when the equities of the Manchester house were created, it took place more than four months prior to the bankruptcy. If, on the other hand, it took place only when the physical possession of the securities was taken, it was within the prescribed period.

Now, as bearing upon this question of time, it is clear that the Manchester house had the right at any time to demand and take possession of the securities set aside for its benefit. While the necessity for immediately taking possession was evidently not contemplated by the parties, I think that the very fact that the securities were set aside "in escrow" shows that the right of the Manchester house to take possession was recognized at the beginning. Delivery upon condition is the very essence of an escrow, and, while that term was improperly used by the parties here to describe their transaction, I think it still carries with it the idea of delivery; and, there being no agreement otherwise, delivery would take place when required by the Manchester house. I have no doubt that after demand the Manchester house could have enforced its rights to the possession of the securities in equity if not in law.

The possession having been actually taken within four months of the bankruptcy, we now reach the decisive question whether it can be held to relate back to the time when the right to take possession was created—whether the act of taking possession created a lien, or merely enlarged and perfected an existing lien. And, in my opinion, in view of the equities between the parties and all the circumstances, such act should relate back to the creation of the right which it perfected, and the transfer be regarded as having taken place more than four months before the bankruptcy.

The case of Thompson v. Fairbanks, 196 U. S. 516, 25 Sup. Ct. 306, 49 L. Ed. 577, seems directly in point here. In that case a mortgagee

took possession, with the consent of the mortgagor, of after-acquired property covered by a valid mortgage within four months before bankruptcy proceedings against the mortgagor; but the Supreme Court held that this was done pursuant to a pre-existing right and did not constitute a preference, and quoted with approval the following extract from Sabin v. Camp (C. C.) 98 Fed. 974, where it was held that a transaction which was consummated within the prescribed period was not a preference, because it had originated before:

"What was done was in pursuance of the pre-existing contract, to which no objection was made. Camp furnished the money out of which the property, which is the subject of the sale to him, was created. He had good right, in equity and in law, to make provision for the security of the money so advanced, and the property purchased by his money is a legitimate security, and one frequently employed. There is always a strong equity in favor of a lien by one who advances money upon the property which is the product of the money so advanced. This was what the parties intended at the time, and to this, as already stated, there is, and can be, no objection in law or in morals; and when, at a later date, but still prior to the filing of the petition in bankruptcy, Camp exercised his rights under this valid and equitable arrangement to possess himself of the property and make sale of it in pursuance of his contract, he was not guilty of securing a preference under the bankruptcy law."

The Supreme Court then went on to say:

"The principle that the taking possession may sometimes be held to relate back to the time when the right so to do was created is recognized in the above case. So in this case, although there was no actual existing lien upon this after-acquired property until the taking of possession, yet there was a positive agreement, as contained in the mortgage and existing of record, under which the inchoate lien might be asserted and enforced, and, when enforced by the taking of possession, that possession, under the facts of this case, related back to the time of the execution of the mortgage of April, 1891, as it was only by virtue of that mortgage that possession could be taken. The Supreme Court of Vermont has held that such a mortgage gives existing lien by contract, which may be enforced by the actual taking of possession, and such lien can only be avoided by an execution or attachment creditor, whose lien actually attaches before the taking of possession by the mortgagee. Although this after-acquired property was subjected to the lien of an attaching or an execution creditor, if perfected before the mortgagee took possession under his mortgage, yet, if there were no such creditor, the enforcement of the lien by taking possession would be legal, even if within the four months provided in the act. There is a distinction between the bald creation of a lien within the four months, and the enforcement of one provided for in a mortgage executed years before the passage of the act, by virtue of which mortgage, and because of the condition broken, the title to the property becomes vested in the mortgagee, and the subsequent taking possession becomes valid, except as above stated."

See, also, Humphrey v. Tatman, 198 U. S. 91, 25 Sup. Ct. 567, 49 L. Ed. 956; Wood v. United States Fidelity, etc., Co. (D. C.) 143 Fed. 424.

I think these principles applicable here. While the Supreme Court in the cases referred to treats the validity of the mortgages and the rights of the mortgagees thereunder to be matters of local law, in my opinion it also states this underlying and controlling distinction: The exercise of a pre-existing right well founded in equity is not a preference, although occurring within the prescribed period. "The bald creation of a lien within four months" is a preference.

The application of the principle involved in this distinction is de-

cisive here in favor of the Manchester house. It had an equitable right to the securities which were held "in escrow" for its benefit. Its rights and equities were created years before the bankruptcy. It could at any time have enforced its right to the possession of the securities. No element of fraud and no intervening rights of purchasers or attaching creditors appear. The securities were not property the possession of which would be visible to third persons and afford a basis of credit. It is my opinion that possession was taken pursuant to a pre-existing right, and that equitable principles support such right. I think that this is in no aspect a case of the bald creation of a lien within four months of bankruptcy.

The case of Zartman v. First National Bank, 189 N. Y. 273, 82 N. E. 127, 12 L. R. A. (N. S.) 1083, relied upon by the appellee as his principal case upon this point, is not in conflict with these views. In that case there was merely a contract to give a mortgage upon after-acquired property. There was no lien which could have been enlarged or perfected by taking possession.

Finally, I think it a serious question whether a mortgagee or pledgee taking possession of property in pursuance and in the enforcement of a pre-existing right of long standing can properly be said to have reasonable cause to believe that the mortgagor in surrendering possession is intending to give him a preference. He takes possession in his own right of that which he looks upon as his own special property. Instead of regarding the transaction as a preference, he would, as suggested in Thompson v. Fairbanks, 196 U. S. 516, 25 Sup. Ct. 306, 49 L. Ed. 577, rather take it as a recognition of his right under his mortgage or pledge. See, also, Humphrey v. Tatman, 198 U. S. 93, 25 Sup. Ct. 567, 49 L. Ed. 956.

Upon principles similar to those already considered, I think that the taking of possession by the Manchester house of the securities embraced in the "special escrow" related back to its creation, and, consequently, that that transaction, although occurring within four months of the bankruptcy, was based upon a contemporaneous consideration and did not constitute a preference.

The decree of the District Court should be reversed, with costs.

LACOMBE, Circuit Judge. I concur in the conclusion that the decree should be reversed, for the reasons set forth in the opinion of Judge NOYES.

(172 Fed. 646.)

RENIGAR v. UNITED STATES.

(Circuit Court of Appeals, Fourth Circuit. June 3, 1909.)

No. 834.

1. INDICTMENT AND INFORMATION (§ 2*)—NECESSITY OF FORMAL PRESENTMENT—PROVISIONS OF FEDERAL CONSTITUTION—"INDICTMENT."

The fifth constitutional amendment in providing that "no person shall be held to answer for a capital or otherwise infamous crime unless on a presentment or indictment of a grand jury" intends not merely an indictment in form, but a valid indictment found and presented according to the settled usage and established mode of procedure.

[Ed. Note.—For other cases, see Indictment and Information; Cent. Dig. § 5; Dec. Dig. § 2.*

For other definitions, see Words and Phrases, vol. 4, pp. 3551–3555.]

2. INDICTMENT AND INFORMATION (§ 11*)—RETURN INTO COURT.

To constitute a valid indictment for an infamous crime in a federal court, it must have been publicly presented in open court, all the grand jurors being present and answering to their names, the indictment then being delivered by the foreman to the clerk of the court, and the fact entered of record.

[Ed. Note.—For other cases, see Indictment and Information, Cent. Dig. § 62; Dec. Dig. § 11.*]

3. INDICTMENT AND INFORMATION (§ 11*)—VALIDITY—RETURN INTO COURT—"INDICTMENT."

A paper purporting to be an indictment, indorsed as a true bill by the foreman of a federal grand jury, and delivered by him alone to the clerk of the court in the courtroom when court was not in session, is not an indictment, and confers no jurisdiction on the court to try the accused.

[Ed. Note.—For other cases, see Indictment and Information, Cent. Dig. § 62; Dec. Dig. § 11.*]

4. INDICTMENT AND INFORMATION (§ 194*)—DEFECTS OF FORM—SCOPE OF CURATIVE STATUTE.

Rev. St. § 1025 (U. S. Comp. St. 1901, p. 720), providing that "no indictment found and presented by a grand jury * * * shall be deemed insufficient * * * by reason of any defect or imperfection in matter of form only," has no application to an indictment not duly found and presented; the defect in such case not being one of form, but of substance.

[Ed. Note.—For other cases, see Indictment and Information, Cent. Dig. § 627; Dec. Dig. § 194.*]

In Error to the District Court of the United States for the Western District of Virginia, at Lynchburg.

Waller R. Staples, for plaintiff in error.

Thomas L. Moore, U. S. Atty. (Samuel H. Hoge, Asst. U. S. Atty., on the brief).

Before PRITCHARD, Circuit Judge, and MORRIS and BRAWLEY, District Judges.

BRAWLEY, District Judge. The case is before us upon a writ of error to review a judgment of the United States District Court for the Western District of Virginia, whereby plaintiff in error was sentenced to serve two years in the penitentiary at Atlanta, Ga., and to

pay a fine of $5,000, for the violation of section 5440 of the Revised Statutes (U. S. Comp. St. 1901, p. 3676). There are numerous assignments of error, but we have deemed it unnecessary to consider any except that presented in defendant's bill of exceptions No. 15, wherein the facts relating to the return of the alleged indictment as certified by the court are as follows:

"Defendant's Bill of Exceptions, No. 15.

"Be it known that on the 21st day of March, 1908, after the above W. H. Renigar had been put upon trial, and several of the witnesses for the government had been examined, the clerk of this court entered an order herein, dated March 18, 1908, which said order reads as follows:

" 'Order as to Finding Indictment by Grand Jury.

" 'Entered March 18, 1908.

" 'The grand jury again appeared and reported (among others) the following indictment, to wit:

" 'Indictment vs. Pinkney Ayers, W. H. Renigar, W. H. Phillips and Jas. N. Bordwine, for vio. sec. 5440, R. S.

" 'A True Bill.'

"Which order was spread upon the order book, and for the first time known to counsel for the defendant on this the 21st day of March, 1908.

"Whereupon counsel for the defendant moved the court to correct said order, and to have the same to conform to the facts in reference to the alleged return of the alleged indictment, which said facts the court here certifies were as follows:

"On the 17th day of March, 1908, in the trial of the case of The United States v. Pinkney Ayers, the evidence was concluded on the afternoon of said March 17th, and court was adjourned until 10 o'clock a. m. March 18, 1908. On March 18th the judge of this court, in his office beneath the courtroom in the Federal Building in the city of Lynchburg, by appointment, met counsel for government and for the said Pinkney Ayers, at or about 9 o'clock a. m., and the said judge and counsel were engaged in the consideration of the instructions in the case of The United States v. Pinkney Ayers until about 2:30 o'clock p. m., with the exception of about one hour, during which they were separated and were at lunch. While the judge and counsel were so engaged, in the office of the judge beneath the courtroom, the paper herein, purporting to be an indictment, was by the foreman of the grand jury, who came alone into the courtroom, handed to the clerk at his desk in said courtroom, and by him marked 'Filed,' about 12 o'clock noon, while the judge and counsel for Pinkney Ayers, who were also of the counsel for the defendant in this case, were engaged in the judge's chambers; the judge of this court never having at that time been in the courtroom at any time during that day and did not make his appearance in the courtroom until about 2:30 o'clock p. m., an hour or more after the said filing of the said alleged indictment, since which appearance of the judge in the courtroom no proceedings have been had upon the said indictment, except such as appear of record herein.

"Counsel for defendant moved the court to correct its order above set forth, and to make the same conform to the state of facts herein set out, and at the same time stated to the court the fact that the indictment had been handed to the clerk and marked 'Filed' in the absence of the judge from the courtroom was known to counsel for defendant on the 18th day of March, 1908, at 1:30 o'clock p. m., and before pleading in abatement or in bar of the said alleged indictment; the court stating that the jury, clerk, marshal, and other officers of the court did meet in the courtroom at 10'clock a. m. on the 18th day of March, and were simply awaiting the return of the judge until he could finish the consideration of the instructions, which for convenience was being done in the judge's chambers, on the floor below; also that the court has, at a previous term, given instructions to the clerk and to the assistant district attorney that no further announcement should be made of an indictment found by the grand jury, and that the same, after indorsement, should be brought by the

foreman and handed to the clerk, who would thereupon mark the same 'Filed,' and proceed to make the regular order of entry; the reason for such instruction being that frequently parties who were indicted learned of the facts through the public announcement thereof in the courtroom before capiases for their arrest could be served, thus leading to difficulties in making arrests and to flights. But the court certifies that the defendant W. H. Renigar was in attendance upon this court on a bond not to depart without leave of court, and that nothing contained in the direction hereinbefore referred to in any manner applied to this particular case.

"It being conceived, therefore, by the judge of the court that the indictment was in legal effect returned into court and entered, and that the order as written by the clerk is in proper form, and as the court does not conceive that the defendant would be prejudiced by its refusal to now change the said order, did overrule the motion of counsel for defendant."

The fifth amendment to the Constitution provides that no person shall be held to answer for a capital or otherwise infamous crime unless on a presentment or indictment of a grand jury. As the statute authorized, and the court imposed a sentence of two years in the penitentiary, there can be no question that the defendant was charged with an infamous crime (Ex parte Wilson, 114 U. S. 426, 5 Sup. Ct. 935, 29 L. Ed. 89; Mackin v. United States, 117 U. S. 352, 6 Sup. Ct. 777, 29 L. Ed. 909), and a fundamental prerequisite to the defendant's trial was an indictment by the grand jury. Does a paper purporting to be an indictment upon which the foreman has indorsed "A True Bill," handed to the clerk, when the court is not in session, and when none of the grand jury except the foreman are present, conform to those settled usages and modes of proceeding which from the earliest days have governed the finding of indictments? 1 Chitty on Crim. Law, 324, describes the mode in which the grand jury returns the results of their inquiries to the court, by indorsing "A True Bill" if found, and "Not a True Bill" if rejected; and says:

"When the jury have made these indorsements on the bills, they bring them publicly into court, and the clerk of the peace at sessions, or clerk of assize on the circuit, calls all the jurymen by name, who severally answer to signify that they are present, and then the clerk of the peace or assize asks the jury whether they agreed upon any bills, and bids them present them to the court, and then the foreman of the jury hands the indictments to the clerk of peace or clerk of assize."

4 Blackstone, 306, also describes the functions of the grand jury and the methods of its proceedings, the necessity of 12 at least assenting to the accusation, and adds:

"And the indictment when so found is publicly delivered into court."

A later text-writer (1 Bishop on Crim. Procedure, § 869) says:

"When the grand jury has found its indictments, it returns them into open court, going personally in a body."

The Compilation, 22 Cyc. 210, cites cases from 15 states to support the proposition in the text that the "finding by a grand jury of a true bill and indorsement thereon to such effect are not alone sufficient to render it valid as an indictment, but it is found necessary that the bill should be presented or returned by the grand jury in open court." It would unduly extend this opinion to cite all of these cases, and we lim-

it ourselves to an examination of cases in this, the Fourth circuit, and, first, as to the practice in the state of Virginia, where this case arose.

In Commonwealth v. Cawood, 2 Va. Cas. 541, decided in 1825, Judge Brockenbrough, delivering the opinion of the court, says:

"The accusation in due and solemn form is as indispensable as the conviction. What, then, is the solemnity required by law in making the accusation? The bill of indictment is sent or delivered to the grand jury, who, after hearing all the evidence adduced by the commonwealth, decide whether it be a true bill or not. If they find it so, the foreman of the grand jury indorses on it 'A True Bill,' and signs his name as foreman, and then the bill is brought into court by the whole grand jury, and in open court it is publicly delivered to the clerk, who records the fact. It is necessary that it should be presented publicly by the grand jury, that is the evidence required by law to prove that it is sanctioned by the accusing body, and until it is so presented by the grand jury, with the indorsement aforesaid, the party charged by it is not indicted, nor is he required or bound to answer any charge against him which is not so presented. * * * The circumstance that this bill is indorsed a true bill and signed by David Campbell, foreman, affords no record proof that the bill was found by any grand jury, nor particularly by this grand jury. That gentleman may have been frequently the foreman of other grand juries in the same court, and, though we all know as men that he would not sign any paper as foreman without being really so, yet as judges we must require record proof that he was authorized by the grand jury of which he was foreman to make the indorsement now before us, and that he presented it in their presence in open court as the accusation against this individual."

The judgment of the court was that:

"As it does not appear from the records that the grand jury had presented any bill of indictment against Benjamin Cawood for murder, in open court, as a true bill, that the subsequent plea of not guilty does not cure the defect."

In the case of Price v. Commonwealth (decided in 1872) 21 Grat. (Va.) 859, the court, through Moncure, its president, referring to the Cawood Case, says:

"That is a case of the highest authority. It was argued with great ability by very able counsel, both for the commonwealth and the accused, and was decided by very able judges."

In Simmons v. Commonwealth, 89 Va. 157, 15 S. E. 387, decided in 1892, the court says:

"It still does not appear that the indictment was delivered in court by the grand jury, and its finding recorded. This omission is a fatal defect. No man can be tried for a felony in the courts of this commonwealth except upon an indictment of the grand jury, and the indictment to be valid must be presented in open court and the fact recorded. Until this is done the accused is not indicted. This was decided in Cawood's Case, nearly three-quarters of a century ago. * * * It was held to be essential to the validity of an indictment that it be publicly delivered in open court, and that the fact be recorded; that this is the evidence required by law to prove that it is sanctioned by the accusing body; and that until it is so presented the party charged by it is not indicted. * * * That case has always been regarded as settling the rule in this state."

In the state of West Virginia the Supreme Court in State v. Heaton, 23 W. Va. 778, decided in 1883, says:

"The solemnity required by law in making a criminal accusation is thus stated by the court in the Commonwealth v. Cawood, 2 Va. Cas. 541."

There follows a quotation from the opinion in that case which is cited above. "There is no question but that this correctly describes the regular and proper mode of proceeding in the institution and presentation of criminal charges, both in England and in this state."

In North Carolina, the Supreme Court in State v. Cox, 28 N. C. 445, decided in 1846, refers to the proper practice. There was contention there that the presentment (which was a case of misdemeanor) had not been signed by 12 of the body, and it was held that that was not necessary, and the court says:

"The bill, however, being the act of the jury, they ought in every instance to be in court when one is returned, and so in making a presentment, and to ascertain that they are present they ought always to be called by the clerk."

And in State v. Bordeaux, 93 N. C. 563, the court says:

"We believe a loose practice prevails in many of our courts with respect to the returns of bills of indictment into court by the grand jury. It is often the case that bills are carried into court by the foreman alone, but this is a practice to be condemned, because it is not the legal mode of proceeding. The law requires that the grand jury should make their returns in a body that the court may see that they as a body assent to the returns made."

No case has been cited from South Carolina, but the writer of this opinion, who had many years' experience as a prosecuting officer, in that state, can say that the invariable rule in that state, both in the state and in the federal courts, has been that a grand jury, when it has any presentments to make, comes into court, and the clerk calls the names of all of the grand jury. The clerk then asks the foreman if he has any presentments, and the bills are handed to the clerk and the result of the finding as to each bill is announced by the clerk in open court. It has not infrequently happened that a mistake in such announcement has been corrected by some grand juror present. That the practice has been as stated is referred to in State v. Creighton, 1 Nott & McC. (S. C.) 256, where objection was made to the finding of the grand jury in writing which had been publicly announced by the clerk in their presence, but not signed by the foreman, and the court says:

"It has long been the custom in this state for the foreman of the grand jury to sign their finding, and perhaps it would still be advisable to adhere to it, but I concur in the opinion that this being in writing, and having been publicly announced by the clerk, as is invariably the case, in the presence of the grand jury, is a sufficient guard against misconstruction or perversion, and, as there is no positive law requiring it, it is not essentially necessary to its validity that it should be signed by the foreman."

The overwhelming weight of opinion and authority is that it is essential to the validity of an indictment that it be presented in open court and in the presence of the grand jury.

One of the cases cited by the attorney for the government as establishing a different rule is Danforth v. State, 75 Ga. 614, 58 Am. Rep. 480, where it was held that the sworn bailiff is competent to make return in court of bills found by the grand jury. This is under a statute of Georgia, where a part of the oath of the bailiff of the grand jury is as follows:

"You do solemnly swear that you will * * * carefully deliver to that body all such bills of indictment or other things as shall be sent to them by the court, without alteration, and as carefully return all such as shall be sent by that body to the court."

In Sampson v. State, 124 Ga. 776, 53 S. E. 332, the Supreme Court of that state February 15, 1906, held as follows:

"An indictment must be returned into open court. Accordingly, when the judge of a superior court at 10 o'clock a. m. of a given day ordered that a recess of the session of the court for that day be taken from that time until 8:30 the next morning, and then left the courtroom, and did not return during the remainder of that day, an indictment returned during the afternoon of the same day by the bailiff of the grand jury to the clerk of the court while he was in the courtroom was not properly returned."

In its opinion the court refers to the practice which had always prevailed of grand juries returning indictments into open court until the adoption of the Code of 1882, after which it was held, as in Danforth's Case, that the bailiff might make such return, and says: "As under the old practice the grand jury was required to return indictments and presentments into open court, it follows that the bailiff *must* do likewise," citing Gardner v. People, 20 Ill. 430, where the court, after holding before a party can be tried on an indictment it must appear from the record that it was returned into open court, said:

"This requirement is proper for the protection of the citizen against being forced to defend himself against charges never acted upon or presented by a grand jury. If it were otherwise, by either accident or design, he might be compelled to make such defense."

And Goodson v. State, 29 Fla. 511, 10 South. 738, 30 Am. St. Rep. 135:

"The only recognized manner in which the findings of the grand jury can be authoritatively presented is in open court. Were the rule otherwise, it would render it possible for a designing and revengeful foreman of a grand jury to ruin any citizen by surreptitiously filing with the clerk in his office an indictment manufactured by himself alone upon which his fellow jurors had taken no action."

Very few cases are found which show the practice in the courts of the United States relating to the presentments of grand juries. In United States v. Butler, 1 Hughes, 457, Fed. Cas. No. 14,700, heard before Chief Justice Waite and Circuit Judge Bond, a motion was made by the defendants that they be not compelled to answer the indictment on the ground that it was not a legal instrument, as there had been no formal publication of the finding of the grand jury in court. Bond, Circuit Judge, stated that he remembered the circumstances of the finding of this indictment. It had been brought in by the grand jury. "The foreman had handed it to the clerk, by whom it was handed to the court for inspection, but afterwards it was handed back to the clerk for entry. The names of the grand jurors had been called out, and they had been asked if this was their finding and they had answered that it was, but the handing of the indictment to the clerk and the entry of it on the record was all the publication ever intended. It was not meant that the whole world should know who were indicted and for what offenses, because the accused could then escape." Chief

Justice Waite stated that he had never known any other practice. From this it clearly appears that the indictment had been brought into open court by the grand jury, and that their names had been called; the Chief Justice stating that he had never known any other practice.

In Crain v. United States, 162 U. S. 625, 16 Sup. Ct. 952, 40 L. Ed. 1097, the record showed an indictment, the appearance of the accused in person and by his attorneys, an order by the court that a jury come to "try the issue joined," the selection of a jury who was sworn to try the issue joined and a true verdict render, the trial and verdict, finding the prisoner guilty; but did not show that the accused was ever formally arraigned. The verdict was set aside on that ground, and section 1025 of the Revised Statutes (U. S. Comp. St. 1901, p. 720) was considered. Justice Harlan, delivering the opinion of the court, says:

"Neither sound reason nor public policy justifies any departure from settled principles applicable in criminal prosecutions for infamous crimes. Even if there were a wide divergence among the authorities upon this subject, safety lies in adhering to established modes of procedure devised for the security of life and liberty, nor ought the courts in their abhorrence of crime, nor because of their anxiety to enforce the law against criminals, to countenance the careless manner in which the records of cases involving the life or liberty of an accused, are often prepared. * * * We may have a belief that the accused in the present case did, in fact, plead not guilty of the charges against him in the indictment, but this belief is not founded upon any clear, distinct, affirmative statement of record, but upon inference merely. That will not suffice. We are of opinion that the rule requiring the record of a trial for an infamous crime to show affirmatively that it was demanded of the accused to plead to the indictment, or that he did so plead, is not a matter of form merely, but of substance in the administration of the criminal law; consequently such a defect in the record of a criminal trial is not cured by section 1025 of the Revised Statutes, but involves the substantial rights of the accused. * * * The suggestion that the trial court would not have stated in its order that the jury was sworn to try and tried the issue joined unless the defendant plead, or was ordered to plead to the indictment, cannot be made the basis of judicial action without endangering the just and orderly administration of the criminal law. The present defendant may be guilty and may deserve the full punishment imposed upon him by the sentence of the trial court, but it were better that he should escape altogether than that a court should sustain a judgment of conviction of an infamous crime where the record does not clearly show that there was a valid trial."

Bishop, in his work on Criminal Procedure, § 131, defines an indictment as a "written accusation against a specified person or persons of some crime, the elements whereof it consists, made on oath, by not less than 12 of the grand jury, to be carried into court, and there become of record." Blackstone, 4 Comm., 309, says:

"The founders of the English law have with excellent forecast contrived that no man shall be called to answer the King for any capital crime unless upon the peremptory accusation of 12 or more of his fellow subjects, a grand jury, and that the truth of any accusation * * * should afterwards be confirmed by the unanimous suffrage of 12 of his equals and neighbours, indifferently chosen and superior to all suspicion, so that the liberties of England cannot but subsist so long as this palladium remains sacred and inviolate, not only from all open attacks (which none will be so hardy as to make), but also from all secret machinations which may sap and undermine it by introducing new and arbitrary methods of trial. * * * And, however convenient these may appear at first (as doubtless all arbitrary powers and execution are the most convenient), yet will it be again remembered that de-

lays and little inconveniences in the forms of justice are the price that all free nations must pay for their liberty in more substantial matters. For these inroads upon the sacred bulwark of the government are fundamentally opposite to the spirit of our Constitution, and that, though begun in trifles, the precedent will gradually increase and spread, to the utter disuse of jurors in questions of the most momentous concern." Pages 349, 350.

Mr. Justice Wilson (3 vol. 363) says:

"Among all the plans and establishments which have been devised for securing a wise and uniform execution of the criminal laws, the institution of grand juries holds the most distinguished place. This institution is at least in the present times the peculiar boast of the common law. The era of its commencement and the particulars attending its gradual progress and improvement are concealed behind a thick veil of a very remote antiquity, but one thing concerning it is certain. In the annals of the world there is not found any institution so well adapted for avoiding all the inconveniences and abuses which would otherwise arise from malice and rigor from negligence or from partiality in the prosecution of crimes."

Judge King in Commonwealth v. Crans, 2 Clark (Pa.) 172, says:

"Let any reflecting man, be he layman or lawyer, consider the consequences which would follow if every individual could at his pleasure throw his malice or his prejudice into the grand jury room. * * * Into every quarter of the globe in which the Anglo-Saxon race have formed settlements they have carried with them this time-honoured institution, ever regarding it with the deepest veneration, and connecting its perpetuity with that of civil liberty. In their independent action the persecuted have found the most fearless protectors, and in the records of their doings are to be discovered the noblest stands against the oppressions of power, the virulence of malice, and the intemperance of prejudice."

Mr. Justice Field, in his charge to the grand jury (2 Sawy. 667, Fed. Cas. No. 18,255), says:

"In this country, from the popular character of our institutions there has seldom been any contest between the government and the citizen which required the existence of the grand jury as a protection against the oppressive action of the government. Yet the institution was adopted in this country, and has continued from considerations similar to those which give to it its chief value in England, and is designed as means not only of bringing to trial persons accused of public offenses upon just grounds, but also as a means of protecting the citizen against unfounded accusation, whether it come from cause or be prompted by partisan passion or private enmity. No person should be required, according to the fundamental law of the country, except in the cases mentioned, to answer for any of the highest crimes, unless this body consisting of not less than 16, or more than 23, good and lawful men, selected from the body of the district, shall declare, upon careful deliberation, under the solemnity of an oath, that there is good reason for his accusation and trial. From these observations it will be seen, gentlemen, that there is a double duty resting upon you as grand jurors of this district—one, a duty to the government, or, more properly speaking, to society, to see that parties against whom there is just ground to charge the commission of crime should be held to answer the charge; and, on the other hand, a duty to the citizen to see that he is not subjected to prosecution upon accusations having no better foundation than public clamour or private malice."

He refers to the impression which widely prevails that the institution of the grand jury has outlived its usefulness, an impression which had been created from a disregard of those qualities and the facility with which it has unfortunately often been used as an instrument for the gratification of private malice, saying:

"There has hardly been a session of the grand jury of this court for years at which instances have not occurred of personal solicitation to some of its members to obtain or prevent the presentment or indictment of parties."

And, quoting from the charge of Judge King, above referred to:

"Let any reflecting man, be he layman or lawyer, consider the consequences which would follow if every individual could at his pleasure throw his malice or his prejudice into the grand jury room, and he will of necessity conclude that the rule of law which forbids all communication with grand juries engaged in criminal investigation, except through the public instructions of courts and the testimony of sworn witnesses, is a rule of safety to the community."

When the Constitution enumerated those guaranties intended for the security of personal rights, and among them that no person shall be held to answer for a capital or infamous crime unless on the presentment or indictment of the grand jury, it manifestly intended a valid indictment, found and presented according to those ancient rules and safeguards which the law and immemorial custom have provided for the conduct of grand juries. It did not mean a mere form of indictment, but it meant a formal accusation of the offense charged, of which at least 12 of the grand jury were satisfied of the truth, and publicly returned into court, indorsed as a true bill. Until and unless it is so presented, it is no indictment. The fundamental prerequisite to the trial of the defendant for the offense charged against him was an indictment by the grand jury. Every text-writer, from Chitty and Blackstone down to Bishop and Joyce, is in agreement as to the manner in which indictments should be found. They all agree that, when the grand jury has acted upon the bills submitted to them, they come publicly into court, their names are called, and the foreman hands the indictment to the clerk. It is not without reason that this formality is required and that the grand jury should be present when the indictment is presented to the court; for, before a man can be held to answer for a capital or infamous offense, at least 12 of the grand jurors must agree to the finding of a true bill. If the grand jury is present when the presentment is made, their assent is conclusively presumed, unless something to the contrary appears. If they are not present, there can be no such presumption.

As was said in Cawood's Case:

"It is necessary that it should be presented publicly by the grand jury; that is the evidence required by law to prove that it is sanctioned by the accusing body; and, until it is so presented by the grand jury, with the indorsement aforesaid, the party charged by it is not indicted, nor is he required or bound to answer any charge against him which is not so presented."

The foreman is not the representative of the grand jury. He is authorized to speak for it in its presence, when called on by the court to say whether the grand jury has any presentments to make. Any other rule would put it in the power of an individual who happened to be foreman of the grand jury to gratify personal or other malice by presenting in the form of an indictment for an infamous offense a person innocent of all crime, and subject him to the annoyance, expense, and infamy attendant upon such accusation. It is not enough to say that such a thing is improbable; that it is possible is sufficient

reason for adhering to those rules which have the sanction of time and immemorial usage.

That the court was not in session when this paper was handed to the clerk is admitted. The opening of a court is a solemn judicial act, and must be performed by the judge in person. The clerk is a mere ministerial officer, and without statutory authority can exercise no judicial function. As the court was not in session, it would be the same as if this paper had been handed to him on the street. As is well said by Mr. Justice Bradley:

"Illegitimate and unconstitutional practices get their first footing in that way, namely, by silent approaches and slight deviations from legal modes of procedure. This can only be obviated by adhering to the rule that constitutional provisions for the security of person and property should be liberally construed. A close and literal construction deprives them of half their efficacy, and leads to gradual depreciation of the right as if it consisted more in sound than in substance. It is the duty of all the courts to be watchful for the constitutional rights of the citizen, and against any stealthy encroachments. Their motto should be 'Obsta principiis.'"

It is contended by the learned counsel for the government that this is a mere irregularity, and "relates to a defect or imperfection in matter of form only, not tending to the prejudice of the defendant, and is cured by section 1025 of the Revised Statutes." Bram v. United States, 168 U. S. 533, 18 Sup. Ct. 183, 42 L. Ed. 568; Price v. United States, 165 U. S. 311, 17 Sup. Ct. 366, 41 L. Ed. 727; Rosen v. United States, 161 U. S. 29, 16 Sup. Ct. 434, 480, 40 L. Ed. 606; Caha v. United States, 152 U. S. 211, 14 Sup. Ct. 513, 38 L. Ed. 415, are cited in support of this contention. Examination of those cases shows that they fall far short of supporting the view that the case under consideration falls within the curative provisions of section 1025. That section provides that "no indictment found and presented by a grand jury * * * shall be deemed insufficient * * * by reason of any defect or imperfection in the matter of form only, which shall not tend to prejudice the defendant." The defect here is not a matter of form, but of substance—not that the indictment was imperfect in matter of form, but that, in fact, no indictment was found or presented by a grand jury, which is a jurisdictional prerequisite. If a valid indictment can be dispensed with, so may that providing for a trial by a petit jury, and, to use a phrase of Mr. Justice Harlan, a person charged with a crime involving life might be tried before a judge "upon a rule to show cause why he should not be hanged." In Frisbie v. United States, 157 U. S. 160, 15 Sup. Ct. 586, 39 L. Ed. 657, a case much relied on by the government, the objection to the indictment was that it lacked the indorsement "A True Bill," and the signature of the foreman. The court held that as there was no mandatory provision in the federal statutes requiring such indorsement, and that the indorsement was no part of the charge against the defendant, and as the common practice in this country was that the grand jury "return into court only those accusations which they have approved, and the fact that they thus return them into court is evidence of such approval, the formal indorsement loses its essential character," and the defect was held to be upon matter of form only and was waived if the party went to trial without objections.

Joyce on Indictments, § 31, in considering the fifth amendment, says:

"It was manifestly designed and intended for the security of personal rights. It is an essential to the jurisdiction of the court, and, being a constitutional right of a party, cannot be waived by him so as to preclude him from subsequently setting up want of jurisdiction in the court to try him. A party cannot waive a constitutional right when its effect is to give the court jurisdiction."

And in section 32:

"So, where there has been no presentment of the grand jury, or bill of indictment, the fact that a person confessed in court to being guilty of a crime, which requires an indictment or presentment, confers no power upon the court to sentence him to imprisonment, and he can only be lawfully sentenced after he has been proceeded against in the manner provided in the Constitution."

The case before us falls within the reasoning of the opinion in Ex parte Bain, 121 U. S. 1, 7 Sup. Ct. 781, 30 L. Ed. 849. In that case the grand jury found a true bill against Bain November 13, 1886, and the court, after argument upon a demurrer, ordered the indictment to be amended by striking out the words, "the Comptroller of the Currency and"; the court holding those words to be surplusage. More than a year afterwards Bain was arraigned, pleaded not guilty, was tried, and convicted. The case came before the Supreme Court upon a petition for a writ of habeas corpus, and the prisoner was discharged on the ground that the indictment upon which he was tried had not been found by the grand jury. Mr. Justice Miller in his luminous opinion reviews the fifth amendment to the Constitution, and considers the nature and value of the institution of the grand jury, citing with approval the remarks of Chief Justice Shaw of Massachusetts in Commonwealth v. Child, 13 Pick. 198:

"It is a well-settled rule of law that the statute respecting amendments does not extend to indictments; that a defective indictment cannot be aided by a verdict; and that an indictment bad on demurrer must be held insufficient upon a motion in arrest of judgment."

And saying, among other things:

"It has been said that, since there is no danger to the citizen from the oppressions of monarchs or of any form of executive power, there is no longer need of the grand jury."

But, whatever force may be given to this argument, it remains true that the grand jury is as valuable as ever, in securing, in the language of Chief Justice Shaw in the case of Jones v. Robbins, 8 Gray (Mass.) 329, "individual citizens from open and public accusations of crime, and from the trouble, expense, and anxiety of a public trial before a probable cause is established by the presentment and indictment of the grand jury, and in cases of high offenses it is justly regarded as one of the securities to the innocent against hasty, malicious, and oppressive public prosecutions"; and, concluding:

"We are of the opinion that an indictment found by a grand jury is indispensable to the power of the court to try the petitioner for the crime with which he was charged. It is of no avail under such circumstances to say that the court still has jurisdiction of the person and of the crime; for, though it has possession of the person, and would have jurisdiction of the

crime if it were properly presented by indictment, the jurisdiction of the offense is gone, and the court has no right to proceed any further in the progress of the case for want of indictment. If there is nothing before the court which the prisoner, in the language of the Constitution, can be 'held to answer,' he was then entitled to discharge, so far as facts originally presented to the court by the indictment is concerned. The power of the court to proceed to try the prisoner is as much arrested as if the indictment had been dismissed, or a nolle prosequi had been entered. There was nothing before the court on which it could hear evidence or pronounce sentence."

In United States v. Gale, 109 U. S. 65, 71, 3 Sup. Ct. 1, 5, 27 L. Ed. 857, the court held that, where a defendant pleads not guilty to an indictment and goes to trial without making objection to the mode of selecting the grand jury, the objection is waived. Mr. Justice Bradley, who delivered the opinion of the court, says:

"There are cases undoubtedly which admit of a different consideration, and in which the objection to the grand jury may be taken at any time. These are where the whole proceeding of forming the panel is void, as where the jury is not a jury of the court or term in which the indictment is found, or has been selected by persons having no authority whatever to select them, or where they have not been sworn, or where some other fundamental requisite has not been complied with."

And on page 72 of 109 U. S., page 6 of 3 Sup. Ct., 27 L. Ed. 857:

"We think that the doctrine of waiver applies as well to cases where the objection appears of record as where it appears by averment, and that it applies to all cases of impaneling the jury, but it does not apply to cases where the proceeding is wholly void by reason of some fundamental defect or vice therein."

In Hopt v. Utah, 110 U. S. 579, 4 Sup. Ct. 204, 28 L. Ed. 262, the court, after holding that it was not within the power of the accused to dispense with certain statutory requirements, says:

"The public has an interest in his life and liberty. Neither can be lawfully taken except in the mode prescribed by law. That which the law makes essential in proceedings involving deprivation of life or liberty cannot be dispensed with or affected by the consent of the accused, much less by his failure, when on trial and in custody, to object to unauthorized methods."

Thompson and Meriam on Juries, § 657, says:

"It is the general, and probably the universal practice to deliver all indictments to the court in the presence of the grand jury."

And in section 696:

"In his Treatise on Criminal Law, Mr. Chitty states that, when the indorsement 'A True Bill' is made upon the bill, it becomes a part of the indictment, and renders it a complete accusation against the prisoner. This must be understood with the qualification that the record further shows the indictment to have been publicly returned into court, as required by law. This recital is positively essential to establish the identity of the indictment found by the grand jury with that which appears in the record, and upon which the defendant is arraigned. The omission to make the proper entry of the return of the indictment cannot be cured by the production of a paper purporting to be the indictment duly indorsed and signed by the foreman of the grand jury, nor will this defect be cured by the defendant pleading upon the merits or by a verdict of guilty."

In Regina v. Heane, 9 Coxe, C. C., 433, Chief Justice Cockburn, says:

"As regards the objection that the motion to quash cannot be made after plea pleaded, I think, if it is made to appear clearly that there was no jurisdiction, we have power to quash the indictment at any stage, and even for matter not apparent on the face of the indictment, brought to our notice by extraneous evidence upon affidavits."

We have been extremely reluctant to set aside the judgment in this case upon grounds which may appear technical, and for that reason have given unusual time to its consideration, and to an investigation of the practice in every state, where the institution of the grand jury is preserved. Nothing is more clear than that the "established mode of procedure" is for the grand jury to make its presentments publicly in open court all of the grand jurors being present and answering to their names. It follows that a paper purporting to be an indictment handed by the foreman to the clerk when the court is not in session, and, in the absence of the grand jury, is no indictment. This is not a question of irregularity, but of substantive law, based upon the direct terms of the constitutional guaranty that no man shall be "held to answer" for an infamous offense except on an indictment by a grand jury. The indictment—and that means of course a valid indictment found and presented according to the settled usage and established mode of procedure—is a prerequisite to the jurisdiction of the court to try the person accused, an indispensable condition and requirement, the absence of which renders the proceedings not simply voidable, but absolutely void.

The judgment of the court below must therefore be reversed.

Reversed.

(172 Fed. 658.)

ANGLE v. UNITED STATES.

(Circuit Court of Appeals, Fourth Circuit. June 8, 1909.)

No. 841.

In Error to the District Court of the United States for the Western District of Virginia, at Danville.

James J. Britt and R. W. Peatross (Wm. P. Bynum, Jr., and Peatross & Harris, on the briefs), for plaintiff in error.

Thomas L. Moore, U. S. Atty., and Samuel H. Hoge, Asst. U. S. Atty.

Before GOFF and PRITCHARD, Circuit Judges, and BRAWLEY, District Judge.

PER CURIAM. This court having decided, in the case of Renigar v. U. S., 172 Fed. 646, 97 C. C. A. 172, that it is essential to the validity of an indictment that it be presented by the grand jury in open court, and it appearing that the indictment in this case was not so presented, it follows that, for the reasons set forth in the opinion filed at the present term, the judgment in this case must be set aside; and it is so ordered.

(172 Fed. 659.)

PENNSYLVANIA STEEL CO. et al. v. NEW YORK CITY RY. CO. et al.

(Circuit Court of Appeals, Second Circuit. July 6, 1909.)

No. 296.

SALES (§ 66*)—PROPERTY PURCHASED BY LESSEE—LESSOR'S LIABILITY.

The Metropolitan Street Railway Company having leased its road to the New York City Railway Company, the lessee's vice president and general manager received on May 10, 1907, from claimant a written proposal to furnish certain cables. This proposal was accepted and ratified by both parties on May 13th following. The agreement required formal orders to be sent from time to time by the purchasing agent of the railway company to claimants, stating the amount of cables needed and other details. Three orders were sent and signed, "Metropolitan Street Railway Company, per A. C. Tully, Purchasing Agent," and required the cable company to deliver specified cables to "New York City Railway Company" in accordance with proposal of May 10th and letter of acceptance, etc. Such orders were on the printed forms of the Metropolitan Company, and were accompanied by printed bill forms setting forth the Metropolitan Company as the one to be billed against. *Held*, that the purchaser of the cables was the New York City Railway Company, and that the Metropolitan Company could not be made liable therefor, though they were to be used as a part of the Metropolitan's property.

[Ed. Note.—For other cases, see Sales, Cent. Dig. § 181; Dec. Dig. § 66.*]

Appeal from the Circuit Court of the United States for the Southern District of New York.

Bill by The Pennsylvania Steel Company and others against the New York City Railway Company and others, in which the National Conduit & Cable Company filed claim. From an order of the Circuit Court (170 Fed. 623) overruling exceptions of claimant to the report of a special master disallowing the claim against the Metropolitan Street Railway Company, claimant appeals. Affirmed.

Johnson & Galston, for appellant.

Masten & Nichols (William M. Chadbourne, of counsel), for receivers of Metropolitan St. Ry. Co.

Before COXE, Circuit Judge, and HOUGH and HAND, District Judges.

COXE, Circuit Judge. The sole question presented by this appeal is whether the cables furnished by the National Conduit and Cable Company were delivered pursuant to a contract made with the Metropolitan Street Railway Company or with the New York City Railway Company. The master found that the Metropolitan Company did not make or authorize the contract of purchase. He, therefore, disallowed the claim and his report to this effect was confirmed by the Circuit Court. We see no reason why this conclusion should be disturbed.

The contract was unquestionably made by the New York City Railway Company. On the 10th day of May, 1907, the Conduit Company made a written proposal, addressed to Oren Root, Jr., vice president and general manager of the City Company, to furnish the cables in question. After a few unimportant modifications were made the

proposal was accepted and ratified by both parties and on May 13, 1907, became a valid, binding agreement.

Based upon the written contract alone the contention that the Metropolitan Company is liable for the cables is absolutely untenable. The name of the Metropolitan Company is not mentioned and the agreement is explicit "to manufacture and deliver * * * the following transmission cables for the New York City Railway Company." It was further provided that formal orders should be sent from time to time by the purchasing agent of the railway company to the Cable Company stating the amount of cable needed and other details incident to the order. Three of these orders were sent to the Cable Company signed, "Metropolitan Street Railway Co., per A. C. Tully, Purchasing Agent." They required the Cable Company to deliver the specified cables "to New York City Ry. Co. F. O. B. Dock N. Y. City * * * all to be in accordance with proposal of The National Conduit & Cable Co., dated May 10, '07, and letter of acceptance by the V. P. & G. M., dated May 11th, 1907."

It is argued by the claimant that because these orders are on the printed forms of the Metropolitan Company and were signed by that company by A. C. Tully, apparently its purchasing agent, and were accompanied by printed bill forms setting forth the Metropolitan Company as the party to be billed against, that the master should have found as a conclusion of law that the Metropolitan Company was the principal debtor. We cannot accede to this proposition. The orders in question were given ten days after the consummation of the agreement between the Cable Company and the City Company. The moment that agreement was ratified the rights of the parties thereto became fixed, neither could vary its conditions without the consent of the other. The Cable Company chose to make its agreement with the City Company. Whether the Metropolitan Company as lessor, could have entered into such an agreement it is unnecessary to decide. It is enough that it did not do so. The orders for cables are expressly provided for in the agreement and state on their face that they were made in accordance therewith. The City Company could, if it so desired, direct the installation of the cables purchased by it upon the property of the Metropolitan Company authorizing that company to give the necessary orders and to do any other act necessary to complete the work. In other words the mere fact that the cables were placed in position pursuant to the order and direction of the Metropolitan Company is wholly insufficient to establish liability on its part. The cables were at all times after delivery the property of the City Company; it could do with them as it liked. No other company could be made liable for their payment unless there was an agreement express or implied to that effect. No such agreement is shown.

The order is affirmed.

(172 Fed. 661.)

FOWLER & WOLFE MFG. CO. v. NATIONAL RADIATOR CO.

(Circuit Court of Appeals, Third Circuit. July 1, 1909.)

No. 47.

1. PATENTS (§ 160*)—CONSTRUCTION—REFERENCE TO SPECIFICATION.
Where terms which are not technical terms of the art are used in the claims of a patent to differentiate between different tubes in the patented structure, the specification may be referred to for the purpose of ascertaining their meaning as so used.
[Ed. Note.—For other cases, see Patents, Cent. Dig. § 235; Dec. Dig. § 160.*]

2. PATENTS (§ 328*)—INFRINGEMENT—RADIATORS.
The Fowler patent, No. 609,800, for a radiator, narrowly construed as required by the prior art, *held* not infringed.
[Ed. Note.—For other cases, see Patents, Dec. Dig. § 328.*]

Appeal from the Circuit Court of the United States for the Western District of Pennsylvania.

E. H. Hunter, for appellant.
Frank S. Busser, for appellee.

Before GRAY, Circuit Judge, and LANNING and YOUNG, District Judges.

GRAY, Circuit Judge. This is an appeal from the decree of the Circuit Court for the Western District of Pennsylvania, dismissing the bill of complaint brought for the alleged infringement of the Fowler patent, No. 609,800, dated August 30, 1898, for an improvement in radiators. The bill was dismissed on the ground of noninfringement. The bill also charged infringement of design patent No. 28,761, but this charge was withdrawn.

In May, 1899, the complainant brought suit against defendant for infringement of claims 1, 2, 3, and 4 of both of said letters patent. At that time, defendant was making a radiator which he says in his brief in this case was a clear infringement of the patent sued upon. Defendant consented to a decree and was licensed under the patents to make any and all forms of radiators embodying the inventions of said patents, saving and excepting one specific form. A few years after the execution of this license, the defendant, who makes a variety of styles of radiators, put on the market the radiator complained of in this suit. Subsequently, on July 13, 1904, complainant brought this suit and made application for a preliminary injunction, contending that the radiator involved the subject matters of claims 1 and 2 of said patent No. 609,800, and embodied the design of said patent No. 28,761, and also the specific form expressly excepted from the said license. Defendant contended, first, that its radiator did not involve the invention of either of the patents in suit; and second, that, assuming that it embodied the inventions of the patent in suit, it did not correspond to the form excepted from the license. The court sustained the latter defense, and refused the preliminary injunction, holding that the re-

spondent's form of radiator was covered by the license. When the suit came on to a final hearing, complainant contended that defendant's radiator was of the form of the patented invention excepted from the license, and that therefore the defendant was an infringer. The court below, in dismissing the bill, held as follows:

"On application for preliminary injunction, we refused to grant it, holding respondent's form was covered by the license. The case now comes on for final hearing. In the light of fuller proofs, we have now reached the opinion that, while we rightfully refused the preliminary injunction, we were mistaken in the ground we took for so doing, and that the refusal should have been based on the fact that the respondent's radiator does not infringe."

The invention is thus described by the patentee in the letters patent:

"My invention relates to radiators, and it consists of the improvements which are set forth in the following specifications and claims which are shown in the accompanying drawings. * * *

"In carrying out my invention, I form the radiator of cast iron sections, which may be used either singly or grouped together and coupled as hereinafter set forth, according to the area of the radiating surface desired. * * *"

Claims 1 and 2 of the patent in suit, the only ones here involved, are as follows:

"1. A radiator-section composed of unitary hollow casting, consisting of four outer tubes communicating with one another at the corners, one or more intermediate cross-tubes between opposite outer tubes, and a series of connecting-tubes between each intermediate cross-tube and the opposite outer tube or adjacent intermediate cross-tube.

"2. A radiator-section composed of a unitary hollow casting, consisting of a tubular structure embracing outer tubes communicating with one another at the corners, one or more cross-tubes between the outer tubes, and a series of connecting-tubes between said cross-tubes and the adjacent outer tubes."

Owing to the decree entered in the former suit, and the license to the defendant, the validity of the patent is not in controversy. The sole question is one of interpretation; that is, what is the real invention covered and described by claims 1 and 2 of the patent in suit. The appellant complains, under different specifications of error, of the interpretation given by the court below to these claims and of the view taken by it of the real and substantive invention of the patent in suit. The opinion of the court below in this respect is as follows:

"While, as between these parties, the validity of the patent must be assumed, yet it is evident its scope is exceedingly narrow. In his specification Fowler sets forth, as his substantial advance in the art, the fact that the cross-tubes of his radiator are of larger size than the connecting tubes, which run at right angles. It is evident that these relative sizes are not mere preferential or illustrative constructions, but that they are the particular features which characterize the invention and are embodied in the claims in controversy. A study of the specification shows that unless based on this difference the patent has nothing to support it. Thus the patentee says: 'The sections are preferably rectangular in shape and composed of two longitudinal top and bottom tubes BB', united by two end tubes CC', which are connected by a series of smaller longitudinal tubes D. I prefer to employ intermediate cross-tubes E, connecting the tubes BB' and having the longitudinal tubes D connecting with them. In the construction shown there are two of these large intermediate cross-tubes E located between the end tubes CC and dividing the small longitudinal tubes D into three sets or series. The small longitudinal tubes D are located at sufficient distance apart to form intermediate openings or space *e* for the circulation of air between them. Each

section thus constructed is composed of a series of communicating tubes, forming a unitary rectangular hollow frame.' Now it is clear to us that the word 'preferably' refers to the rectangular shape and not to the relatively 'large intermediate cross-tubes' and the 'small longitudinal' or connecting tubes, No other sizes or modes of construction are shown or suggested and the larger sizes are designated as 'cross-tubes' and the smaller as 'connecting tubes,' and as such, both are carried into the claims. The very fact that the two sets of intermediate tubes are called in the claims, one 'cross-tubes' and the other 'connecting tubes', shows a purpose to differentiate them and the only ground of differentiation is found in the figures and specification in which latter the cross-tubes are described as 'large intermediate tubes,' and the connecting tubes as 'small longitudinal tubes'. These limitations, if carried into the claims, embody a different structure from that of the respondent and the claims so read fail to sustain the charge of infringement. So construing the claims infringement is not shown and the bill will be dismissed."

After a careful consideration of the record and arguments of counsel, we are of opinion that the court below were justified in the views thus expressed.

An examination of the prior art, as disclosed in the record, shows at once that the invention of the patent in suit is a narrow one. Arrangements of cast and wrought iron radiating tubes placed in juxtaposition, in sections, and parallel with each other, terminating and opening into larger tubes at the top and bottom, thus affording an uninterrupted circulation of steam or water through all of them, were quite old in the art. They constituted unitary hollow quadrilaterals or castings (where cast iron was used instead of wrought iron, though that is not material), consisting of four outer tubes communicating with each other at the corners, with a series of transverse and parallel radiating tubes, extending between two of the outer tubes and opening into them. Examples of such structures are shown in the Mills radiator patent, No. 154,651, the Safford radiator patent No. 355,216, and others, constituting in their general features a standard radiator structure in use long before the date of the patent in suit. In view of this standard form, the device of the patent in suit exhibits only a somewhat different arrangement of tubes and a division of the cast iron section into sub-sections, by what are called cross-tubes in the specifications and claims. The words "cross-tubes" convey no definite and adequate meaning, when taken alone. They necessarily are relative. The words of the claim are, "one or more intermediate cross-tubes between opposite outer tubes." They must be taken relatively, and therefore to require outer tubes, opposite to each other, between which they must continuously extend as unitary structures, and they must correspond structurally and in fact to what is connoted by the word "tube." We look at once at the drawings and specifications of the patent, as we are authorized to do in order to obtain a more definite conception of these cross-tubes relatively to the other parts of the structure, and we find in the drawing of the patent the two cross-tubes extending between the longer outer tubes of the section and corresponding in size therewith. This drawing also makes clear what is meant by a series of connecting tubes between the cross-tube and the outer tube, or between two cross-tubes, which was not clear from the claims themselves. When we turn to the specifications, the character and relation to each other of the tubes constituting the unitary hollow casting dealt with in the

claims, becomes entirely clear. We quote this part of the specifications, and insert a drawing taken from the patent in suit, illustrating complainant's radiator:

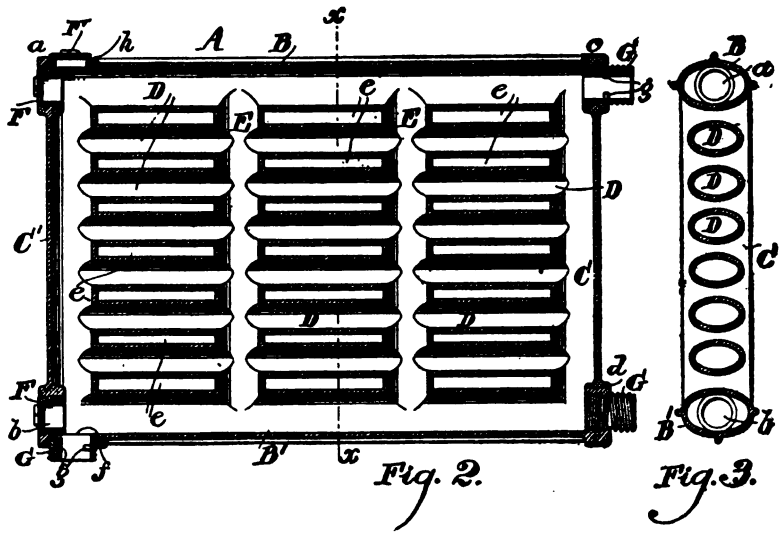

"A is one of the radiator sections, composed of a hollow cast-iron frame made up of a battery of tubes.

"The sections are preferably rectangular in shape and composed of two longitudinal top and bottom tubes BB', united by two end tubes CC', which are connected by a series of smaller longitudinal tubes D. I prefer to employ intermediate cross-tubes E, connecting the tubes BB' and having the longitudinal tubes D connecting with them. In the construction shown there are two of these large intermediate cross-tubes E located between the end tubes CC and dividing the small longitudinal tubes D into three sets or series. The small longitudinal tubes D are located at sufficient distance apart to form intermediate openings or spaces *e* for the circulation of air between them. Each section thus constructed is composed of a series of communicating tubes, forming a unitary rectangular hollow frame.

"I prefer to construct the section A with the tubes arranged in the manner described, because as the circulation of the steam and water is in horizontal planes the most free circulation should be permitted in those directions, and this is attained by the large horizontal tubes BB' and the series of small tubes D. The small tubes are preferably made of an area substantially equal to that of a one-inch pipe; but as tubes of that size are liable to offer considerable friction to the steam or water traversing them I prefer to shorten their length by the interposition of the intermediate transverse tubes E. While I prefer this particular arrangement of the tubes for the reasons stated, it is to be understood, however, that I do not mean to limit myself to this precise construction."

The frequent use of the word "preferably" throughout this part of the specifications, does not serve to extend the scope of the claims beyond the structure thus shown, where no alternative form is suggested and the relative sizes of the cross-tubes and connecting tubes shown in the specifications are essential to their respective functions. But, aside from this, it is noticeable that the words "preferably" and "I prefer" are immediately applicable to the rectangular shape of the section,

or to the mere arrangement of the tubes, as being horizontal or vertical. The "cross-tubes" are throughout referred to as larger, and the connecting tubes as smaller, which the latter must necessarily be, as there is a multiplicity of them, as indicated by the word "series." Indeed the presence and use of cross-tubes is due to the necessity of shortening the series of connecting tubes, which, by reason of their small diameter, would offer too much friction if they extended across the rectangle. They were therefore shortened by the interposition of the intermediate tubes. As these intermediate cross-tubes take the place of the large outer tubes, as features of the multiplicity of connecting tubes, they must of necessity be relatively larger. It is thus seen that, functionally this limitation is imposed upon the language of the claims. On this point, Mr. Bently, the expert witness for the defendant, says:

"Thus it seems but reasonable to understand that when Mr. Fowler refers in his claims to the cross-tubes 'between opposite outer tubes,' he means such cross-tubes as he describes and illustrates, to wit, tubes of substantial size and capacity, capable of supplying the small connecting tubes from the outer tubes at one or more intermediate points along the length of the radiator sections. Moreover, when he speaks in his claims of 'a series of connecting tubes,' he means such connecting tubes as he shows and describes, to wit, a substantial multiplicity of small tubes, having relatively large radiating surface, but short and having their conducting capacity reinforced by the cross-tubes."

It is true, as the appellant contends, that the claims of the patent are not to be limited beyond the clear import of their terms, but it is equally true that we may refer to the specifications and drawings to discover the meaning of the terms, as used in the claims. The terms "outer tubes," "cross-tubes" and "connecting tubes," are not technical terms recognized and employed in the art. They are terms used by the patentee to apply to a peculiar construction and arrangement of tubes unknown before his invention. "To ascertain the meaning of these terms, we must therefore go to the specifications, not for the purpose of importing anything into the claims, but for the purpose of ascertaining what characteristics are attributed in the specifications to the terms therein contained." Consolidated Co. v. Walker, 138 U. S. 132, 11 Sup. Ct. 292, 34 L. Ed. 920; Turril v. Railroad Co., 1 Wall. 511, 11 L. Ed. 668; Brooks et al. v. Fiske et al., 15 How. 215, 14 L. Ed. 665. To these authorities, cited in appellee's brief, many others might be added. The discussion of the claims of a patent is not to be confined to a mere logomachy, which could be set at rest at once by a reference to specifications and drawings. The radiator of the defendant is the old standard radiator of the prior art. That is, there are two horizontal headers united by a series of vertical radiating tubes, through which the steam or hot water circulates from header to header. Without more, it is not contended that such a structure infringes the patent in suit.

But it is contended by the appellant that the distinguishing feature of the radiator of the patent in suit, to wit, a cross-tube, is present in defendant's structure, inasmuch, as, halfway the length of the vertical tubes, and between them, are hollow bosses, which form a passageway for the steam through the entire series of vertical tubes. Here

again, it is necessary to inspect complainant's exhibit of defendant's structure, in order to understand the meaning of this contention:

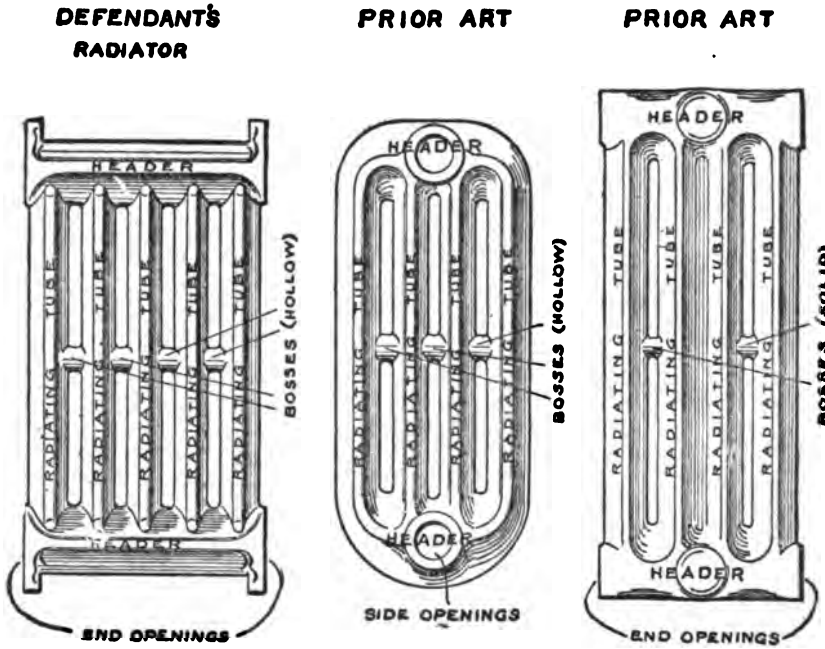

It would seem perfectly apparent from such an inspection, that there is nothing here to answer to the description of the cross-tube in plaintiff's claim, as explained in the specifications. Relying on the literal words of the claim, these connecting bosses do not singly or together constitute a "cross-tube between opposite outer tubes." They may constitute a passageway from one connecting tube to the other, and in connection with these tubes themselves form a passageway from one outer tube to the other, but this passageway is not a tube, nor is it created by a tube. Again, if this series of links in the passageway from one outer tube to the other could, by any ingenuity be interpreted as a cross-tube, it is evidently much smaller than the connecting tubes, instead of larger, as we have shown the cross-tubes of the patent in suit must be. It is sufficient to say, however, that the passageway thus created is not a cross-tube, or a tube of any sort, and neither literally nor functionally comes within the scope of the claims of the patent in suit. Again, if the passageway made possible by these small hollow bosses constitutes a cross-tube, then the vertical tubes of defendant's radiator are the connecting tubes "between such cross-tube and the opposite outer tube," but it is plain that these connecting bosses do not divide or shorten these so-called connecting tubes, which are integral between the headers and constitute structurally continuous tubes from one header to the other. It is an almost absolute reversal of the arrangement of the tubes of the patent in suit. It is curious to note that

the appellant's expert in the license suit, when discussing defendant's radiator, designated the vertical tubes between the outer headers of defendant's structure, as "cross-tubes," and the series of hollow connecting bosses as "connecting tubes," while the expert in the present suit, as we have seen, calls these vertical tubes extending from header to header, "connecting tubes," and the series of hollow bosses between them, "cross-tubes."

That the claims must be read in the light thrown upon the relative size of the outer cross and connecting tubes by the specifications, is confirmed by the significant statement made by the appellant company in its catalogue published after the issuance of the patent in suit. On the first page of this catalogue, under a picture of the patented radiator, representing the outer tubes and cross-tubes as large and the series of connecting tubes as small, there is the following statement:

"The large, outer and cross-tubes, connecting and intersecting the smaller, insure the most positive circulation, the quickest condensation and the most rapid heating under all conditions. These essential factors are covered by our patents. The dimensions insure the entire surface to be effective and efficient."

It is hardly necessary to say that the defendant's radiator presents none of these "essential features." In fact, the defendant's radiator is the radiator of the prior art. Of the "Safford" patent, No. 355,216, December 28, 1886, the expert witness for the defendant says this patent "shows a cast-iron radiator section of the type in question, having four parallel tubes connected across the top and bottom by headers, and moreover, the parallel tubes are in communication with one another by a perforated boss, just as in the defendant's radiator." The same witness also further testifies:

"Reed patent No. 347,127, August 10, 1886, shows another example of the defendant's type of radiator, comprising a number of parallel tubes connected across at their ends by headers. The Reed radiator is also a cast iron radiator. Moreover, it has the same incidental feature of perforated bosses which is found in the defendant's radiator, permitting communication between the parallel tubes."

A reference to these patents and the accompanying drawings, as shown in the record, fully confirms the testimony of defendant's expert. There was also the testimony of more than one witness qualified by foundry experience in the manufacture of cast iron radiators, to the effect that these connecting bosses were used solely as stays between the long parallel tubes. The result of this testimony is thus given by defendant's expert:

"The explanation for their presence is, that in casting these radiators, it is necessary to use what is known as a 'core,' which is a fragile rod of sand or similar material, placed in the mould to form the interior bore of the tube. When these cores are of small diameter and of considerable length, it becomes desirable to brace them, one against the other, by a small cross-core, and this cross-core, when removed, leaves a small opening from one of the parallel tubes into the next. It is obvious to any mechanic, that the presence of this opening between the adjacent parallel tubes of the defendant radiator, is merely an incident of the casting operation."

It is hardly necessary, after the foregoing statement of the interpretation to be given to the language of claims 1 and 2, and of the

view taken of the defendant's structure, to discuss the effect of the license upon the issues here involved, or the question, whether defendant's radiator is of the type, form, or design expressly excepted by said license, to wit:

"Of four outer tubes, one or more cross-tubes, extending parallel with the shorter outer tubes, and a series of connecting tubes extending parallel with the longer outer tubes."

Manifestly, the language of this exception does not describe defendant's radiator. We are of opinion that defendant's radiator is of a form old in the art, and "is nothing but the old fashioned arrangement of a series of parallel tubes of substantially the same dimensions, connected across at the ends by large transverse tubes or 'headers,'" and does not invade the narrow field occupied by the appellant's invention and defined in claims 1 and 2 of the patent in suit.

The decree of the court below should therefore be affirmed.

(172 Fed. 846.)

METROPOLITAN TRUST CO. OF NEW YORK v. McKINNON.

(Circuit Court of Appeals, Second Circuit. June 16, 1909.)

No. 285.

1. BANKS AND BANKING (§ 109*)—PURCHASE OF SECURITIES—ACTS OF OFFICER—TITLE.

Where a bank purchased certain securities at the suggestion of its vice president, who announced that he would make the purchase on behalf of the bank, and subsequently informed the directors that he had done so, and still later turned over certain of the securities to the bank with a letter authorizing it to receive the balance, and at the trial of an action for conversion acknowledged that his intention had been to turn over the securities to the bank on payment of a note for which they were pledged, his possession of the securities was the possession of the bank, and title to the securities was in it.

[Ed. Note.—For other cases, see Banks and Banking, Dec. Dig. § 109.*]

2. SUBROGATION (§ 22*)—REDEMPTION OF PLEDGED SECURITIES.

Where certain stock was purchased by a bank's vice president and another in separate shares, and all of the stock was pledged for a loan to both, the bank, being compelled to pay the whole loan in order to release its share of the stock, was subrogated to the rights of the pledgee as against the balance.

[Ed. Note.—For other cases, see Subrogation, Cent. Dig. § 48; Dec. Dig. § 22.*]

3. BANKS AND BANKING (§ 260*)—ULTRA VIRES ACTS—PURCHASE OF BANK STOCK.

Purchase of national bank stock for speculation by a national bank is ultra vires.

[Ed. Note.—For other cases, see Banks and Banking, Cent. Dig. § 977; Dec. Dig. § 260.*]

4. CORPORATIONS (§ 385*)—ULTRA VIRES CONTRACT.

The obligation of an ultra vires contract is void, whether executed or executory.

[Ed. Note.—For other cases, see Corporations, Cent. Dig. §§ 1545–1547; Dec. Dig. § 385.*]

5. BANKS AND BANKING (§ 101*)—PURCHASE OF STOCK—ULTRA VIRES ACT.

That a bank's purchase of stock in another bank was ultra vires did not prevent it from getting title to the stock, both because an ultra vires contract is simply unauthorized and not forbidden by law, and because the passing of title depends on the intention of the parties and the performance of the requisite formalities by the parties, regardless of whether they are engaged in an illegal enterprise.

[Ed. Note.—For other cases, see Banks and Banking, Cent. Dig. §§ 237, 238; Dec. Dig. § 101.*]

6. ESTOPPEL (§ 56*)—CHANGE OF POSITION.

Where a pledgee of certain bank stock did not act on the owner's repudiation of the pledge, the owner was not estopped to change its position, and by subsequently tendering the amount of the debt acquire a right to the stock.

[Ed. Note.—For other cases, see Estoppel, Cent. Dig. § 142; Dec. Dig. § 56.*]

In Error to the Circuit Court of the United States for the Southern District of New York.

This is an action of trover, originally brought by the receiver of the National Bank of North America in New York, for whom the present defendant in error was later substituted as agent for stockholders. For convenience the plaintiff in error will be referred to as the "trust company," and the defendant in error as the "bank." By stipulation it was agreed that, instead of damages, the bank, if successful, should be entitled to 1,000 shares of stock in the Chase National Bank upon the payment of $150,000, with interest from June 14, 1907, and judgment was entered in accordance with the stipulation. The case was otherwise tried as though it were an ordinary action of trover for the value of the shares of stock.

On January 10th Clinton Gilbert and Charles W. Morse mutually agreed to purchase jointly 5,630 shares of stock in the Chase National Bank at the price of $1,107,230 from certain third persons. One-quarter of this sum they paid to the sellers at once, of which Gilbert contributed $50,000 and Morse $226,807.50, which was the balance. Of the sum paid by Morse, he received one half from the bank, and the other half from the Van Norden Trust Company. The bank received a note of one W. W. Robinson for the half which it paid, and the Van Norden Company the note of Edward B. Wire, for the other half. Robinson was an official in the Van Norden Company, and Wire was an official in the bank.

Gilbert, between January 10, 1907, and June 10, 1907, sold to sundry individuals 130 shares and to Arthur P. Heinze, 2,815 shares, both at a large profit. Heinze obtained part of the purchase price of these shares from the trust company, as follows: He made a note for $150,000 dated June 12, 1907, to his own order, which he indorsed, and which recited that it was secured by 500 shares of Chase National Bank stock, and 2,000 shares of United Copper Company stock, and this note and collateral he delivered to Morse. Before this, 500 shares of the Chase National Bank stock had come into the possession of Morse, under circumstances which will be stated hereafter. These 500 shares, together with the 500 shares which belonged to Heinze, Morse pledged with the trust company for a loan of $150,000, for which he gave his own note, and with the proceeds of which he paid part of the purchase price of the Chase National Bank stock to the sellers. On January 3, 1907, at a meeting of the bank's directors, Morse, who was at that time vice president, had informally told the bank's directors at a regular meeting that a handsome profit could be made by speculating in Chase National Bank stock. It was then also informally agreed among the directors that Morse should make the purchase, and that the bank should take a one quarter interest, and the Van Norden Company another quarter interest; Gilbert retaining his half under the con-

tract before alluded to. On January 17, 1907, Morse had also informed the directors, at another regular meeting, that the transaction had been completed.

On June 18, 1907, and after the sellers of the stock had been wholly paid, there remained in the possession of Gilbert and Morse 2,685 shares of the Chase National Bank stock, fully paid. In addition to this, there remained in Morse's hands the sum of $73,509.45, which was applicable in repayment of the sum that Morse had received from the bank and the Van Norden Company, as stated above. This sum he returned in equal shares to the bank and the Van Norden Company, so that the total sum paid by each of these institutions was $76,649.02, for 670 shares of the stock. Gilbert, in whose name the certificates of stock were issued, indorsed and at various times before June 18, 1907, turned over to Morse, 1,340 shares of stock, of which Morse gave 670 to the Van Norden Company and 170 to the bank; the remaining 500 shares having been theretofore pledged with the trust company, as has already been shown. In regard to these, Morse wrote a letter on June 14, 1907, directed to the trust company, authorizing the delivery to the bank of all the collateral which they held against Morse's note of $150,000.

On October 30, 1907, the bank's president advised the trust company that it claimed the right of possession of all this collateral, subject to the pledge; but later, and on November 27, 1907, the president again wrote the trust company, this time advising them that the bank would not pay the loan, and it authorized the trust company, on payment of the loan by Morse, to deliver the collateral to him. On January 30, 1908, by a second change of position, the bank made tender of the full amount of the note and demanded of the trust company the shares in question. Prior to that time, however, Morse had himself made claim for the stock, and has since brought action against the trust company, which, for some reason not disclosed, did not interplead him in this action.

At the close of the evidence, the learned circuit judge directed a verdict for the plaintiff.

Herbert Parsons, for plaintiff in error.

Underwood, Van Vorst & Hoyt (J. Markham Marshall, of counsel), for defendant in error.

Before COXE and NOYES, Circuit Judges, and HAND, District Judge.

HAND, District Judge (after stating the facts as above). Only two questions arise in this case: First, whether the bank had the immediate right of possession to 1,000 shares of stock; and, second, whether it has estopped itself as against the trust company. As the learned judge at trial directed a verdict, the plaintiff in error is entitled to the most favorable construction possible of all the testimony. There appears to be no basis in the bill of exceptions for the statement in the brief of the defendant in error that both sides requested the direction of a verdict.

Of the 1,000 shares pledged with the trust company, Heinze undoubtedly owned one half, subject to the pledge, and either Morse or the bank owned the other half. The question, then, is, in whom legal title to that other half was vested, Morse or the bank? All the purchase price came from the bank's treasury, although it is true that, in order to preserve the color of legality for the transaction, notes of equal amount were exchanged between the Van Norden Company and the bank, which were subsequently canceled without payment; but title at law depends upon intention, not equity, and it does not fol-

low that Morse did not hold title to the shares, even if it were subject to a resulting trust.

However, there was no question of fact before the court as to the character of Morse's holding, because, before the purchase, he had announced that he would make it on behalf of the bank, and subsequently he informed the other directors that he had purchased it for the bank. Later he turned over 170 shares to the bank, and gave it a letter authorizing it to receive the rest of the stock, together with Heinze's. Upon the trial he acknowledged that he had meant to turn over the stock to the bank upon the payment of Heinze's note. Morse's possession of the certificates was therefore clearly intended, when he took them, to be as agent for the bank, and the title to the 500 shares of stock vested in the bank, whatever Morse may now claim.

Morse, however, pledged these certificates with the trust company along with Heinze's shares, for $150,000, and the question then arises whether, upon tender, the bank could demand, not only its own shares, but Heinze's shares. Concededly the bank had no interest in Heinze's shares, except that it would not obtain its own without tender of the principal and interest of the whole loan, since the trust company had the right to retain possession of all the shares until the loan was paid. Must it, then, having paid the loan, leave with the bank Heinze's shares for the bank to turn over to Heinze? Or could it subrogate itself to the pledge of the bank as against Heinze's shares, in order to release its own? I think there can be no doubt that it could. In paying the loan the bank was not a mere intermeddler. It was protecting its own property, and that it could not do, except by releasing Heinze's shares. Being wrongfully put in this position by one of its own agents, it was not a volunteer, and it might demand of the trust company Heinze's shares, and hold them under the same pledge as the trust company itself enjoyed. If this be true, then, upon tender of the full amount it was entitled to the possession of all of the collateral; one half as owner, and the other as substituted pledgee.

The plaintiff in error makes two objections: First, that the purchase of National Bank shares by the bank was ultra vires; the second, that the bank is estopped. It is undoubtedly true that the purchase by the bank was ultra vires (California Bank v. Kennedy, 167 U. S. 362, 17 Sup. Ct. 831, 42 L. Ed. 198; Concord First National Bank v. Hawkins, 174 U. S. 364, 19 Sup. Ct. 739, 43 L. Ed. 1007; First National Bank v. Converse, 200 U. S. 425, 26 Sup. Ct. 306, 50 L. Ed. 537); and it is also true that the obligation of an ultra vires contract is void, whether executed or executory (De La Vergne v. German Savings Institution, 175 U. S. 40, 20 Sup. Ct. 20, 44 L. Ed. 65). So there is no question but that, if the bank had sued the sellers or Gilbert for the shares of stock, even after the payment by Morse, it could not have recovered on the obligation; but in this case the bank did not need to avail itself of any obligation whatsoever. When Morse got the certificates, he took them as agent only, as I have said, and his intention was that the title pass from Gilbert directly to the bank, for whom he merely received custody. To succeed, the plaintiff in error must assert that, because the bank's title arose from the per-

formance of an ultra vires contract, therefore it never got title. This is wrong, for two reasons: First, because an ultra vires contract is not forbidden by law, but simply not authorized; second, because it makes no difference, anyway, to the passage of title, whether or not the parties are engaged in an illegal enterprise, provided they intend title to pass and perform the requisite formalities. While the law will not compel by its sanctions the performance of acts promised by contract, but forbidden by law, it does not change the effect of the civil acts of persons merely because they are engaged in violating the law. These acts continue to have the usual consequences.

So much for the first objection. As to the second, the trust company does not show that it acted upon the bank's repudiation of the transaction by the letter of November 27, 1907. If so, there was no estoppel in pais, and the bank might repent of its repudiation and subsequently make a tender, which it did.

There was therefore no question for the jury, and the judgment should be affirmed.

(172 Fed. 850.)

LATTA v. CHICAGO, ST. P., M. & O. RY. CO.†

(Circuit Court of Appeals, Eighth Circuit. July 26, 1909.)

No. 2,975.

1. CARRIERS (§ 218*)—CARRIAGE OF LIVE STOCK—CONTRACTS LIMITING LIABILITY—VALIDITY—LAW OF NEBRASKA.

   Const. Neb. art. 11, § 4, which provides that "the liability of railroad corporations as common carriers shall never be limited," applies to contracts involving interstate commerce, and under such provision, as construed by the Supreme Court of the state, contracts made in Nebraska for the shipment of horses to another state, in which, in order to obtain the rate of freight named in the tariff schedules of the company, based on such valuation, the shipper is obliged to agree that the liability of the company shall, in case of loss, be limited to $100 per head, regardless of actual value, are void as to such attempted limitation, and the shipper may recover the actual value.

   [Ed. Note.—For other cases, see Carriers, Dec. Dig. § 218.*]

2. CARRIERS (§ 46*)—INTERSTATE COMMERCE—LIABILITY FOR LOSS OF PROPERTY—LAW GOVERNING.

   The Hepburn act (Act June 29, 1906; c. 3591, § 7, 34 Stat. 595 [U. S. Comp. St. Supp. 1907, p. 909]), relating to the liability of common carriers of property in interstate commerce for loss or damage to such property, but which contains the proviso "that nothing in this section shall deprive any holder of such receipt or bill of lading of any remedy or right of action which he has under existing law," leaves a shipper free to resort to the laws of a state applicable to his contract.

   [Ed. Note.—For other cases, see Carriers, Dec. Dig. § 46.*]

In Error to the Circuit Court of the United States for the District of Nebraska.

H. C. Brome (M. R. Hopewell and W. M. Hopewell, on the brief), for plaintiff in error.

Carl C. Wright (B. T. White, on the brief), for defendant in error.

† Rehearing denied October 11, 1909.

Before HOOK and ADAMS, Circuit Judges, and CARLAND, District Judge.

CARLAND, District Judge. Latta brought this suit in a state court in Nebraska against the Chicago, St. Paul, Minneapolis & Omaha Railway Company to recover damages from it as a common carrier for the breach of a contract to transport from Tekamah, Neb., to Waterloo, Iowa, one mare and colt. The petition alleges that, by the negligence of the defendant, said mare and colt were burned while being transported on the line of defendant's railway in the state of Nebraska, and claims damages to the amount of $3,024.38. The defendant removed the suit into the Circuit Court of the United States for the District of Nebraska, where it was tried by a jury. As a part of the cross-examination of the plaintiff, counsel for defendant offered in evidence the contract under which said property was to be transported, also a paper called a "shipping order." The offering of these instruments was objected to by counsel for plaintiff, but the trial court overruled the objection and admitted them in evidence. The plaintiff gave testimony tending to prove the alleged negligence and how the loss and injury occurred. He then offered evidence tending to show that the value of the mare and colt was $2,500. Counsel for defendant objected to this testimony in regard to value on the ground that it was not competent for the plaintiff to prove any damage or loss in excess of that set out in the contract. Counsel for plaintiff then offered to prove by other witnesses the allegations of his petition. Whereupon the trial court ruled that the defendant was liable in any event for the loss of the mare and colt, but that it was only liable for the amount specified in the contract, and, against the objection of counsel for plaintiff, directed the jury to return a verdict in favor of plaintiff in the sum of $220.09. It was shown at the trial that the rate of $24.38 charged by the defendant for the transportation of the animals mentioned was its regular tariff based upon the valuation stated in the contract. It was also conceded at the trial that said tariff rate had been filed with the Interstate Commerce Commission, and published as required by law, and that the rules, regulations, and tariffs of the defendant on file with the Interstate Commerce Commission disclosed that the above named rate applied to the limited liability contract in use by the company for the transportation of live stock.

The errors assigned herein are that the court erred in refusing to permit the plaintiff to show the actual damage he had sustained, and in so charging the jury as to restrict their verdict to the sum above stated. The contract between plaintiff and defendant for the transportation of the mare and colt so far as is material to the question now under investigation was in the following language:

"Read this Contract.

"Chicago, St. Paul, Minneapolis & Omaha Railway Co.

"It is the desire of this company that this contract shall be executed on all shipments of live stock in car load lots or less. In case shipper declines to execute this contract, the valuation of the live stock, as stated by the shipper, shall be stated on the shipping bill, and in such case the rates will be 10 per cent. higher than they would be under this contract if he executed it. If the shipper declines either to state the value of the live stock on the shipping bill

or execute this contract, the charges in that case will be 10 per cent. higher than the rates provided in this contract when the owner or shipper declares the value of the stock to be over $800. per head or declines to declare its value.

Nos. of Way-bills.	Initials and Nos. of cars	No. and Kind of animals in each car. Shipper's Count.
C. G. W.	5721	1 Horse 1 Colt 7501½
S. L. & C.		Live Stock Contract. Tekamah Station, 5-9'07

"This agreement entered into on the day above stated, between the Chicago, St. Paul, Minneapolis & Omaha Railway Company and B. R. Latta.

"Witnesseth, That the said railway company has this day received from the said B. R. Latta, one horse to be transported from Tekamah, Nebr., station to Waterloo, Ia., station, consigned to Joe McLaughlin, at D. O. at the rate of trf. per cwt. upon the terms and conditions following, that is to say; The said Railway Company shall not be liable for the loss or death of, or any injuries received by, any of such stock, unless the same is immediately caused by the willful misconduct or the actual negligence of the said Company, or its agents, servants or employés.

"The rates provided in the tariffs of this company are based upon the following value of animals named, to-wit:

"One hundred dollars per head on each horse or pony (gelding, mare or stallion), mule or jack.

"Fifty dollars per head on each ox or bull.

"Thirty dollars per head on each cow.

"Ten dollars per head on each calf or hog.

"Three dollars per head on each sheep or goat.

"And if this shipment is moved at the tariff rate it is agreed that the value of the animals shipped does not exceed, of their kind, per head the above named valuation.

"If the shipper declares a value in excess of the above valuation, and this shipment is moved at a rate based thereon, it is agreed that the value of the animals shipped does not exceed such declared valuation, which is as follows:

Each horse or pony (gelding, mare or stallion) mule or jack, per head	$100.00
Each ox or bull	$ ....
Each cow, per head	$ ....
Each calf or hog, per head	$ ....
Each sheep or goat, per head	$ ....

"The shipment covered by this contract is accepted and forwarded subject to the agreed valuation, and the rate of freight is based on the condition that the railway company assumes liability only to the extent of such agreed valuation.

"When the declared value exceeds the valuation on which the tariff rate is charged, an addition of 25 per cent will be made to such rate for each 00 per cent or fraction thereof, additional declared value per head up to $800.00 per head. When the owner or shipper declares the value to be greater than $800.-00 per head, or declines to declare the value of the stock, charges will be based upon 200 per cent of the rate provided above, based on value of $800.00."

The shipping order signed by plaintiff was in the following language:

"See Contract on Back of this Shipping Order.

Chicago, St. Paul, Minneapolis & Omaha Railway Co.

"Shipping Order.

Car No. 5721 (To be retained by Agent)
Initials of Car C. G. W. Tekamah, Station 5-9, 1907

"(The shipper may elect to accept the conditions printed on the back hereof and as contained in the bill of lading of which this shipping order is a part,

or may, as provided below, require the carriage of property at 'Carrier's Risk.)'

"Receive, carry and deliver the articles described below in accordance with the tariff and classification in effect at the date of this order and subject to the conditions of the bill of lading of which this shipping order is a part. (For carrier's liability see note below.)

Consignee, Destination, Marks and Routing	Articles	Weight Subject to Correction.
Joe McLaughlin,	1 horse	
	1 colt under 1 year	
Waterloo, Iowa.		2000
	.O Rel to Cont. val.	750
	S. L. & C.	
	Paid to Apply,	$24.38
Charges Advanced.		B. R. Latta, Shipper.

[In red ink across the face:] Grain subject to Elevator Delivery.

"If the shipper elects not to accept the said tariff rates and conditions, he should so notify the agent of the receiving carrier at the time his property is offered for shipment, and if he does not give such notice it will be understood that he desires his property carried subject to the conditions of the bill of lading of which this order is a part, in order to secure the reduced rates thereon. Property carried not subject to the conditions of the bill of lading will be at the carrier's liability, limited only as provided by common law and by the laws of the United States, and of the several states in so far as they apply. Property thus carried will be charged at the higher rating provided in current tariffs and classifications to apply when not shipped subject to the conditions of the bill of lading of which this is a part, and the cost of marine insurance will be added over any part of the route that may be by water."

"'No. 16. Owner's Risk. All property received and shipped O. R. (meaning owner's risk) is shipped subject to the conditions printed on the back of this receipt, and to all conditions, specified in general tariffs and classifications, and at a reduced rate by reason of the acceptance of such conditions. If the shipper does not accept such conditions he must give notice to the agent at the time of the signing of the shipping bill, and by so doing may have goods forwarded subject only to conditions imposed by law, in which case additional charges will be made, as provided in general tariffs and classifications.'"

It appears from the record before us that the tariff rate for the transportation of live stock over defendant's road based upon a valuation of $100 each for horses is open to all shippers who will sign the contract prepared in such cases by defendant; that no shipper is entitled to the limited live stock rate unless he signs said contract; that the valuation thus fixed by the contract is arbitrarily fixed long prior to any particular shipment and has no reference to the actual value of any particular horse; that the shipper in order to obtain this limited live stock rate must declare the value of his horse to be $100. The contract in the case at bar said:

"If the shipper declares a value in excess of the above valuation, and this shipment is moved at a rate based thereon, it is agreed that the value of the animals shipped does not exceed such declared valuation, which is as follows: Each horse or pony (gelding, mare, or stallion) mule or jack, per head, $100."

In other words, if the shipper desires to avail himself of the limited valuation tariff rate, he has no option whatever but to declare his horse to be of the value placed on it by the defendant. There is no use of contending that the contract in question was not a limitation

of the defendant's common-law liability as a common carrier. The defendant so names it, and it conclusively appears that the limitation of liability is the primary purpose of the provision in regard to value. The question whether the limitation as to value is valid or not is another proposition. Such a contract was upheld in Hart v. Pennsylvania R. R. Co., 112 U. S. 331, 5 Sup. Ct. 151, 28 L. Ed. 717; the Supreme Court stating the rule as follows:

"When a contract of carriage signed by the shipper is fairly made with a railroad company, agreeing on a valuation of the property carried, with a rate of freight based on condition that the carrier assumes liability only to the extent of the agreed valuation, even in case of loss by the negligence of the carrier the contract will be upheld as a proper and lawful mode of securing a true proportion between the amount for which the carrier may be responsible and the freight it receives and of protecting itself against extravagant and fanciful valuations."

The following cases also are in harmony with the rule above stated: Scruggs v. Baltimore, etc., Ry. Co. (C. C.) 5 McCrary, 590, 18 Fed. 318; Ormsby v. U. P. R. R. Co. (C. C.) 4 Fed. 706; Judson v. Western R. R. Corporation, 6 Allen (Mass.) 486, 83 Am. Dec. 646; Adams Express Co. v. Stettaners, 61 Ill. 184, 14 Am. Rep. 57; Ga. Pacific Ry. Co. v. Hughart, 90 Ala. 36, 8 South. 62; Ullman v. C. & N. W. Ry. Co., 112 Wis. 150, 88 N. W. 41, 88 Am. St. Rep. 949; Railway Co. v. Sowell, 90 Tenn. 17, 15 S. W. 837; Rosenfeld v. Peoria, Decatur & Evansville Ry. Co., 103 Ind. 121, 2 N. E. 344, 53 Am. Rep. 500; Western Railway Co. v. Harwell, 91 Ala. 340, 8 South. 649; 4 Elliot on Railroads, 2336; 14 L. R. A. pp. 434, 435, note; 1 Hutchinson, Carriers, § 427, and cases cited. But these cases all deal with the power of common carriers to limit their common-law liability in the absence of a statute restricting such power. The Constitution of Nebraska in article 11, § 4, provides: "The liability of railroad corporations as common carriers shall never be limited." This language by an unbroken line of decisions by the Supreme Court of Nebraska has been construed as avoiding all attempts to limit the common-law liability of railroad corporations as common carriers. Missouri Pacific R. Co. v. Vandeventer, 26 Neb. 222, 41 N. W. 998, 3 L. R. A. 129; St. Joseph & Grand Island R. Co. v. Palmer, 38 Neb. 463, 56 N. W. 957, 22 L. R. A. 335; Union Pacific R. Co. v. Metcalf, 50 Neb. 452, 69 N. W. 961; C., B. & Q. R. Co. v. Gardiner, 51 Neb. 70, 70 N. W. 508; Wabash R. Co. v. Sharpe, 76 Neb. 424, 107 N. W. 758, 124 Am. St. Rep. 823. The case of C., B. & Q. v. Gardiner, 51 Neb. 70, 70 N. W. 508, involved the shipment of a horse from Peoria, Ill., to Hastings, Neb. The value of the horse was agreed to be $100 in the contract of shipment, and in connection therewith was the following language:

"And that the above rate of transportation is based upon the agreement that in case of loss or damage, whether resulting from accident or negligence of said railroad company or its servant, said railroad company does not assume a liability for such loss or damage to exceed the valuation of each animal."

The Supreme Court of Nebraska held this provision of the contract void, although it was contended that the contract was good in Illinois, where it was made. The law as stated in the Constitution of Ne-

braska as interpreted by her Supreme Court in the absence of legislation by Congress is clearly applicable to contracts involving interstate commerce. Chicago, Milwaukee & St. Paul Railway Company v. Solan, 169 U. S. 133, 18 Sup. Ct. 289, 42 L. Ed. 688; Pennsylvania R. R. Co. v. Hughes, 191 U. S. 477, 24 Sup. Ct. 132, 48 L. Ed. 268. The contract in question was a Nebraska contract, and her Constitution as interpreted by her Supreme Court, which interpretation is binding on us, struck down the limitation of the right of recovery in said contract as soon as it was made. Chicago, Milwaukee & St. Paul Railway Company v. Solan, 169 U. S. 133, 18 Sup. Ct. 289, 42 L. Ed. 688; Pennsylvania R. R. Co. v. Hughes, 191 U. S. 477, 24 Sup. Ct. 132, 48 L. Ed. 268.

It is claimed, however, that Congress has legislated upon the very subject now under discussion, and that in consequence thereof the law of Nebraska, so far as it is sought to enforce the same against the provisions of a contract in relation to Interstate Commerce, is inoperative. In this connection our attention is called to Act June 29, 1906, c. 3591, § 7, 34 Stat. 595 (U. S. Comp. St. Supp. 1907, p. 909). In the section referred to is found the following language:

"That any common carrier, railroad, or transportation company receiving property for transportation from a point in one state to a point in another state shall issue a receipt or bill of lading therefor and shall be liable to the lawful holder thereof for any loss, damage, or injury to such property caused by it or by any common carrier, railroad, or transportation company to which such property may be delivered or over whose line or lines such property may pass, and no contract, receipt, rule, or regulation shall exempt such common carrier, railroad, or transportation company from the liability hereby imposed; provided, that nothing in this section shall deprive any holder of such receipt or bill of lading of any remedy or right of action which he has under existing law."

It plainly appears from a reading of the above language that Congress has legislated upon the subject of the liability of railroad corporations as common carriers when engaged in interstate commerce. If it were not for the proviso accompanying the language above quoted, we should feel compelled to determine the validity of the contract in question with reference to the law of Congress. We think that the proviso found in the law above quoted was placed therein to cover just such a case as is now presented. Congress, undoubtedly, was aware of the many conflicting decisions by the courts in reference to the question as to how far common carriers could limit their common-law liability by contract, receipt, rule, or regulation. It therefore was aware that the Constitution of Nebraska as interpreted by her Supreme Court was in conflict with the rule established by the United States Supreme Court in Hart v. Railway Company, supra; and was also aware that the Supreme Court of Pennsylvania in Grogan v. Adams Express Company, 114 Pa. 523, 7 Atl. 134, 60 Am. Rep. 360, refused to follow the rule established by said case of Hart v. Railway Company, supra; and therefore, in view of these conflicting opinions, very wisely provided that the legislation by Congress should not deprive "any holder of such receipt or bill of lading of any remedy or right of action which he has under existing law."

We are therefore of the opinion that the right which the plaintiff

in this case had under the law of Nebraska to sue for the full value of his property was not taken away by the legislation of Congress herein referred to, but was preserved to him, and that he may now enforce that right as he has attempted to do.

It results that the judgment of the trial court must be reversed and a new trial granted, and it is so ordered.

(172 Fed. 856.)

UNITED STATES v. FOO DUCK.

(Circuit Court of Appeals, Ninth Circuit. September 13, 1909.)

No. 1,681.

ALIENS (§ 24*) — EXCLUSION — CHINESE PERSON—MINOR SON OF CHINESE MERCHANT.

The minor son of a Chinese merchant lawfully domiciled in the United States, who immigrated and entered the United States while a minor without trick, deception, or fraud, under a certificate issued by the Registrar General at Hongkong and vised by the acting United States Consul General at the same place, and who during the remainder of his minority labored and studied in the United States, is entitled to remain after attaining his majority, though he has since worked as a laborer.

[Ed. Note.—For other cases, see Aliens, Cent. Dig. §§ 76–78; Dec. Dig. § 24.*]

Appeal from the District Court of the United States for the District of Montana.

Proceeding by the United States for the exclusion of Foo Duck, a Chinese person, alleged to be unlawfully within the United States. From a decree discharging defendant from custody (163 Fed. 440), the United States appeals. Affirmed.

James W. Freeman, U. S. Atty., and S. C. Ford, Asst. U. S. Atty.

Thomas C. Marshall, A. L. Duncan, and Woody & Woody, for appellee.

Before GILBERT, ROSS, and MORROW, Circuit Judges.

MORROW, Circuit Judge. This is an appeal from an order of discharge entered by the judge of the district court for the district of Montana in the proceedings instituted by Howard D. Ebey, Chinese Inspector, charging that the appellee, Foo Duck, had on or about the 26th day of September, 1907, been found unlawfully within the United States.

The facts agreed upon by the United States attorney and counsel representing the defendant, and stated in the opinion of the district judge, are as follows: The father of the defendant is a Chinaman, a merchant, in Missoula, Mont., and has been engaged in the mercantile business in that city for over 15 years. The defendant is over 23 years old. He arrived in the United States in May, 1901, when he was over 16 years old. He had a certificate issued under the treaty between the United States and China, and in apparent conformity with section 6 of the act of Congress approved July 5, 1884 (chap-

ter 220, 23 Stat. 116 [U. S. Comp. St. 1901, p. 1307]). In this certificate he gave his former and present occupation as student. After the defendant arrived in Missoula, he worked as a cook and waiter at different times for several years. Part of the time he was helping the matron at the University of Montana, which is situated in Missoula, and while in this position, with the aid of the matron, he studied the English language, and learned to speak and read and write the same. He speaks English quite well, wears short hair, dresses as an American, and has evidently studied considerably. The appellant was admitted into the United States as a student in May, 1901, in accordance with the permission granted and the identification made by a certificate issued by the Registrar General at Hongkong and vised by the acting United States Consul General at the same place. This certificate was issued under the provision of article 2 of the treaty between the United States and China concerning immigration, dated November 17, 1880 (22 Stat. 827), article 3 of the Convention of December 8, 1894 (28 Stat. 1211), and section 6 of the act approved May 6, 1882 (Act May 6, 1882, c. 126, 22 Stat. 60), as amended by the act approved July 5, 1884 (Act July 5, 1884, c. 220, 23 Stat. 116 [U. S. Comp. St. 1901, p. 1307]), continued in force by act of May 5, 1892 (chapter 60, 27 Stat. 25 [U. S. Comp. St. 1901, p. 1319]) and with all laws on the subject re-enacted, extended, and continued without modification, limitation, or condition by the act of April 29, 1902 (chapter 641, 32 Stat. 176 [U. S. Comp. St. Supp. 1907, p. 414]), as amended by the act of April 27, 1904 (chapter 1630, 33 Stat. 428).

In addition to this certificate, the appellant was at the time of his arrival a minor child of a merchant residing at Missoula, Mont., in the United States. In that relation he would have been admitted into the United States without a certificate. United States v. Mrs. Gue Lim, 176 U. S. 459, 20 Sup. Ct. 415, 44 L. Ed. 544. In that case Gue Lim was the wife of Fook Kee, a Chinese merchant engaged in buying and selling merchandise in the city of Seattle, in the state of Washington. She arrived and was admitted into the United States without the production of the certificate mentioned in section 6 of the act of July 5, 1884. The court held that such a certificate was not required of the wife of a merchant domiciled in this country. Under the title of this case, there were also appeals from the United States District Court for the District of Washington discharging certain minor children from arrest upon the charge of being unlawfully within the United States. These appellants were the minor children of a Chinese merchant lawfully residing and doing business in the city of Walla Walla, in the state of Washington. They had also been admitted into the United States without having produced the certificate required by the act of July 5, 1884. They relied entirely upon the status of their father as a merchant residing in this country. With respect to the minor children, the court said:

"In the case of minor children, the same result must follow as in that of the wife. All the reasons which favor the construction of the statute as exempting the wife from the necessity of procuring a certificate apply with equal force to the case of minor children of a member or members of the admitted classes. They come in by reason of their relationship to the father,

and, whether they accompany or follow him, a certificate is not necessary in either case. When the fact is established to the satisfaction of the authorities that the person claiming to enter, either as wife or minor child, is in fact the wife or minor child of one of the members of a class mentioned in the treaty as entitled to enter, then that person is entitled to admission without the certificate."

There is no fraud charged against the appellant in obtaining the certificate under which he was admitted into the United States; nor is there any question raised as to his having been a student both before and after his arrival in the United States. It is not questioned that he is and was at the time of his arrival in this country a son of a merchant domiciled in this country. He was, therefore, lawfully admitted into the United States.

The contention of the government is that, notwithstanding these facts, the appellant should be deported because after he arrived in this country "he worked as a cook and waiter at different times for several years." Part of the time his work consisted in helping the matron of the University of Montana, and while in this position, with the aid of the matron, he studied the English language, and learned to speak and read and write the same. His labor was therefore in part at least closely related to his work as a student. When he came to this country, he was 16 years of age. He is now over 23 years old. He has been here over seven years, five of these years he was a minor, and all of these years he was a son of a merchant residing and doing business in this country. Do these facts place the appellant in the excluded class and subject him to deportation?

Where a Chinese person secures admission into the United States as a merchant and immediately becomes and continues as a laborer, this latter fact is evidence that he came into the United States as a laborer, and the court is justified in holding that his coming was in violation of the statute, and that he is unlawfully within the United States and cannot remain. But, when the Chinese person has obtained admission lawfully under the statute, and without any trick, deception, or fraud has become domiciled in the United States for a period of seven years, we do not see how he can be deported if during that time he has been found temporarily performing acts of labor. In the general immigration laws Congress has provided a probationary period of three years for the purpose of determining whether certain immigrants should be deported by reason of immoral practice during that period. Section 3, Act Feb. 20, 1907, c. 1134, 34 Stat. 899 (U. S. Comp. St. Supp. 1907, p. 392). But no probationary period has been provided in the laws relating to Chinese immigration, and, aside from the presumptions arising from the employment of such an immigrant after his arrival in this country as evidence of what it was when he came into the country, we know of no law providing for the deportation of a Chinese person who has lawfully obtained admission into the United States, and has not become subject to deportation under the general immigration laws.

The judgment of the District Court is affirmed.

(172 Fed. 785.)

TREMONT COAL & COKE CO. v. JOHNSON.

(Circuit Court of Appeals, Ninth Circuit. September 7, 1909.)

No. 1,656.

1. MASTER AND SERVANT (§ 129*)—MASTER'S LIABILITY FOR INJURY TO SERVANT—PROXIMATE CAUSE OF INJURY.

Plaintiff, a miner employed by defendant, was coming out of the mine, riding on the front bumpers of a cable car being drawn up a slope, with his arm resting on the top edge of the car, when he was struck by a stream or sheet of water escaping from a defective joint in a pipe used for pumping water from the mine, which was supported along the roof of the tunnel, was thrown around to one side, and his arm was crushed against the roof timbers, which were some six inches above the top of the car. *Held* that, to render defendant liable for the injury, it was not necessary to show that the force of the water was such as to physically throw plaintiff around and bring his arm in contact with the timbers, but that it was sufficient if it caused him to instinctively throw up his arm.

[Ed. Note.—For other cases, see Master and Servant, Cent. Dig. §§ 257–263; Dec. Dig. § 129.*]

2. MASTER AND SERVANT (§ 217*)—MASTER'S LIABILITY FOR INJURY TO SERVANT—ASSUMED RISK.

The fact that there had been a small leak in the pipe at the same place for some time was not sufficient to charge plaintiff as matter of law with assumption of the risk, where it had not before been such as to cause any reasonable apprehension of danger.

[Ed. Note.—For other cases, see Master and Servant, Cent. Dig. §§ 574–600; Dec. Dig. § 217.*

Assumption of risk incident to employment, see note to Chesapeake & O. R. Co. v. Hennessey, 38 C. C. A. 314.]

3. MASTER AND SERVANT (§ 129*)—MASTER'S LIABILITY FOR INJURY TO SERVANT—PROXIMATE CAUSE OF INJURY.

In such case the primary act of negligence was that of defendant in maintaining the pipe in its defective condition, which was a breach of its legal duty to furnish plaintiff with a reasonably safe passageway to and from his work, and was the proximate cause of the injury.

[Ed. Note.—For other cases, see Master and Servant, Cent. Dig. §§ 257–263; Dec. Dig. § 129.*]

In Error to the Circuit Court of the United States for the Northern Division of the Western District of Washington.

This is an action at law, brought by the plaintiff, Charles G. Johnson (defendant in error here) against the Tremont Coal & Coke Company, defendant (plaintiff in error here), for injuries received while employed in defendant's coal mine as a rock miner. The suit was originally commenced in the superior court for King county, Wash., and was transferred later to the Circuit Court of the United States for the Western District of Washington because of diversity of citizenship.

It appears from the evidence that plaintiff was employed by defendant in its coal mine as a rock miner; that he was a miner of about 17 or 18 years' experience, and had been working in the mine about a month before the accident happened; that the only means of ingress and egress to the work in the mine was the cable railway cars operated by defendant upon a track constructed down the slope running into the mine at an angle of about 45 degrees; that defendant maintained, in connection with its equipment for working the mine, an engine and pipe line for the purpose of pumping water from

the mine as it accumulated at the bottom. This engine was situated at the surface of the mine, and the pipe line ran down the slope or drift to the bottom of the mine. It was a cast-iron pipe, flanged, and about eight inches in diameter, made up of a number of lengths of pipe. At the end of each length was a collar or flange, and these were fastened together with from six to eight bolts.

The testimony on the part of the plaintiff tended to show that the pipe line was not properly installed; that it was insecurely fastened, so that under the pulsation and throbbing of the pump it vibrated to a considerable extent —this constant vibration, together with the loosened joint, being the supposed cause of the break or leak. The leak was at a flange joint in the pipe, and from the constant jarring of the pipe one of the bolts holding the flange became loosened, which permitted the water to flow out in a thin sheet through the crevice between the two flanges. The evidence tended to show, further, that on the morning of July 18, 1906, plaintiff was returning to the surface after finishing his work on the night shift. He took a place upon one of the front bumpers of the car in going out of the mine. He was sitting on the front bumpers, with his back braced against the front end of the car; his right arm resting on the top edge of the car. When the car ascending the slope had reached a point about 250 feet from the surface, it encountered the water falling from the leak in the pipe, which struck plaintiff on the left side and twisted him around, so that his arm caught between the car and the beam. The stream had sufficient force to knock a person against the car. It put out the lights carried by those on the car. Plaintiff's arm was caught between the car and the timbering of the slope, and was broken at the wrist and permanently injured. The cross-beam where he was injured was about 6 inches above the top of the car. Plaintiff and other miners, on their way down to work on the night shift the evening before, noticed a leak at the point where the accident afterwards occurred; but it was not such a leak as they met on the trip up in the morning. It was customary for the miners to ride upon the front end or bumpers of the cars in going into and coming out of the mine. Instructions were given by the mine authorities that two men should ride on the front end of the front car coming out of the mine, because the front trucks were apt to leave the tracks and this tended to prevent it.

The evidence on the part of the defendant tended to show that this pipe line ran down some distance before it took an elbow; that a break or leak in the pipe occurred about three lengths above this elbow; that the water ran down the pipe and off the end of the elbow, making it appear as though the break was at the elbow; that the mine was known as a wet mine, and it was necessary to operate the pump continuously to keep the water down; that, although this leak was known to the mine authorities, it was not thought of sufficient importance to necessitate shutting down the pumping plant in order to repair it at that time.

The case was tried before a court and jury, and a verdict rendered against the defendant for the sum of $1,500. To this judgment the plaintiff in error prosecutes this writ of error.

Blattner & Chester, Shepard & Flett, and L. B. Da Ponte, for plaintiff in error.

Frank A. Steele and Harrison Bostwick, for defendant in error.

Before GILBERT, ROSS, and MORROW, Circuit Judges.

MORROW, Circuit Judge (after stating the facts as above). The defendant contends that the evidence did not show that plaintiff was injured, substantially as alleged in his complaint, by having been knocked over by the force of a stream of water issuing from a vent in the pipe, but does show that the injury was due to the carelessness of plaintiff in permitting his arm to come in contact with the walls of the drift. The complaint alleged that:

"Said pipe, by reason of its faulty and insufficient construction, was broken at one of the joints thereof, and water flowing therefrom, by reason of the great pressure as a result of the pumping of water through it, struck the plaintiff with great force on the head and face, and he was thrown against the side of the car, where his right arm was caught between the car and the timbers of said slope and was broken at the wrist and permanently injured."

The complaint further charged the defendant with negligence in permitting the pipe to become unsafe and out of repair. The plaintiff testified:

"That the stream of water struck him with force enough to throw him around on the car and put out all the lights. His arm came between the timber and the car and was broken."

On cross-examination he testified:

"That he was sitting on the front bumpers, with his back braced against the front end of the car; his right arm resting on the top edge of the car. The water, striking him on the left side, twisted him around, so that his arm was caught between the car and the beam."

John Gillis testified:

"That he was on the car with plaintiff at the time plaintiff was injured—about 7 o'clock in the morning of July 18, 1906. That the car was coming up out of the slope. Plaintiff and Johnnie Pete, the pump boy, were riding on the front bumpers of the car, while he (witness) rode inside the car. That when they reached within 200 or 300 feet of the top of the drift there was a stream of water or something put out the front lights, and before he realized what had happened the water struck him in the face, and knocked his cap and light off his head, and turned his head over against the car, and left them in total darkness until they got to the top of the slope. After getting up out of the slope, and out of the car, the pump boy told him that plaintiff had hurt his arm; and witness looked at his arm, and plaintiff said that it happened as the lights went out."

This testimony describes the accident substantially as alleged in the complaint. It is true there is testimony on the part of the defendant describing the accident in different terms. John Pete was called as a witness on the part of the defendant. He testified:

"That he rode on the front bumper in question with the plaintiff at the time he was injured. Gillis was in the car. Plaintiff was sitting at witness' left. At the point where the old slope goes up, the water came down and put out their lights. When the wafer struck Johnson, it did not throw him around or change his position. He had his arm on the edge of the car before the water hit him. The water did not come in a violent stream, but in the form of a shower. At first, when he saw it, it seemed to be coming out of the joint above the beam; but he soon discovered that it was not, but out of the joint farther up the old slope."

The objections to the allegations of plaintiff's complaint and the evidence introduced in support thereof is the fact that the evidence introduced on the part of the defendant tends to show that there was no leak in the pipe near the place of accident, and, therefore, no force of water coming from the pipe at that point; but the leak or break was some 50 feet further up the pipe, from which point the water flowed along the pipe to an elbow opposite the place of accident, where the water fell in a shower, giving the appearance of a leak or break in the pipe at that point. Conceding that the testimony of the defendant does appear to establish this fact, we do not see how it is material here. The

plaintiff did not, in his complaint or in his testimony, attempt to locate the leak in the pipe. All he did was to locate the place where he was injured as the place where he was struck by the falling water. And conceding, further, that he may have overestimated the force of the water, under the impression that the leak in the pipe was at the place of the accident, we do not see how that fact, if it is a fact, presents a question for this court to determine.

The evidence tended to show that defendant was negligent in maintaining the pipe in a defective condition. The question, then, was whether there was a sufficient force of water coming down at the place of the injury to cause plaintiff to change his position, so that his arm was thrown out, and caught between the car and the beam, and broken; and that was a question of fact for the jury to determine. The fall of the water need not have been at the point of the leak or break in the pipe, and need not have been of sufficient power as to have physically forced the plaintiff around and to have thrown his arm up against the beam. It was sufficient if it caused the plaintiff to make an instinctive effort, reasonable under the circumstances, to avoid what he supposed was imminent danger; and this effort caused the plaintiff to throw his arm where it was injured.

The ultimate facts to be alleged and proven were the neglect of the defendant in maintaining the pipe in a defective condition, the resulting injury to the plaintiff, and his freedom from contributory negligence. A leading case on this subject is the English case of Jones v. Boyce, 1 Starkie, 493. The action was on the case against the defendant, a coach proprietor, for so negligently conducting the coach that the plaintiff, an outside passenger, was apparently placed in a perilous position, which caused him to leap from the coach to the ground, whereby his leg was broken. The coach was not overturned, and evidence was introduced on the part of the defendant tending to show that there was no necessity for the plaintiff to jump from the coach. Lord Ellenborough, in submitting the case to the jury, said:

"It is for your consideration whether the plaintiff's act was the measure of an unreasonably alarmed mind, or such as a reasonable and prudent man would have adopted. If I place a man in such a situation that he must adopt a perilous alternative, I am responsible for the consequences."

In Coulter v. American Merchants' Express Co., 56 N. Y. 585, the complaint was that the plaintiff had received injuries caused by the negligence of defendant's servant. The plaintiff was walking on the sidewalk of a street in Syracuse, when an express wagon belonging to defendant was driven up rapidly upon the sidewalk behind her. She sprang sideways to escape the danger, and struck her head against the wall of a building, and was injured. The court said:

"The instinctive effort on the part of the plaintiff to avoid the danger did not relieve the defendant of responsibility."

In Beven on Negligence in Law (3d Ed.) vol. 1, p. 156, the author says:

"Persons who, in a sudden emergency, are distracted by terror, and thus, between two courses, choose the wrong one, are not disentitled to recover. This is plain; for the very state of incapacity to judge calmly, which induces

the improvident act, is produced by the negligent act of the defendant. To hold that a plaintiff is disentitled to recover in such a case would be to hold that the defendant can set up the state of terror produced by the wrongful act as a protection against the consequences."

The uncontradicted evidence is that the force of the water was sufficient to put out the lights carried by those on the car, leaving them in total darkness, except for an electric light about 100 feet up the slope. The plaintiff testified that the water struck him with such force as to throw him around on the car and put out all the lights. John Gillis testified that the water put out the lights before he realized what had happened. The water struck him in the face, and knocked his cap and light off his head, and threw his head over against the car, and left him in total darkness until it got to the top of the slope. John Pete, a witness for the defendant, testified that the water put out the lights; there was an electric light about 100 feet up the slope; when the water struck him, he put his head down, but the plaintiff did not. This evidence was sufficient to support the allegations of the complaint; and whether, under such circumstances, the defendant was negligent in maintaining the pipe in its defective condition, and the plaintiff free from contributory negligence, were clearly questions of fact for the jury.

The contention that plaintiff assumed the risk, because there had been a shower of water at the point of the accident for several days prior to the injury, is answered by the testimony of the plaintiff and others that the volume of water was not so great when they passed this point before. The plaintiff testified that there never was any danger there from water before; that there never was any leak there before of that amount; that he had no reason or occasion to fear the water when he went up the gangway or slope. If the jury believed this testimony, it was sufficient to warrant it in finding that the plaintiff did not assume the risk incident to the position in which he was placed by reason of the falling water.

It is assigned as error that the court refused to give the jury certain instructions requested by the defendant defining proximate cause. These instructions defined proximate cause as meaning substantially such a cause as might have been foreseen or reasonably expected to result in the injury sustained by the plaintiff. One of these instructions was as follows:

"You are instructed that the water escaping from the joint is not to be deemed the proximate cause of the injury, unless the injury was such a consequence under all the surrounding circumstances of the case as might or ought to have been foreseen or anticipated by the defendant, in the exercise of ordinary care, as a natural result of such defect."

A clear and comprehensive definition of the term "proximate cause" is undoubtedly required in an instruction to a jury in a case where there is a succession of causes, and the question is whether there is a new and independent cause intervening between the primary cause and the injury to the plaintiff. As stated by Mr. Justice Cooley in his work on Torts (3d Ed., p. 99):

"It is not only requisite that damage, actual or inferential, should be suffered; but this damage must be the legitimate sequence of the thing amiss."

In discussing this subject the author lays down the following propositions:

"(1) The one, already more than once mentioned, that in the case of any distinct legal wrong, which in itself constitutes an invasion of the right of another, the law will presume that some damage follows as a natural, necessary and proximate result. Here the wrong itself fixes the right of action. We need not go further to show a right of recovery, though the extent of recovery may depend upon the evidence.

"(2) When the act or omission complained of is not in itself a distinct wrong, and can only become a wrong to any particular individual through injurious consequences resulting therefrom, this consequence must not only be shown, but it must be so connected by averment and evidence with the act or omission as to appear to have resulted therefrom according to the ordinary course of events, and as a proximate result of a sufficient cause.

"(3) If the original act was wrongful, and would naturally, according to the ordinary course of events, prove injurious to some other person or persons, and does actually result in injury through the intervention of other causes which are not wrongful, the injury shall be referred to the wrongful cause, passing by those which were innocent. But if the original wrong only becomes injurious in consequence of the intervention of some distinct wrongful act or omission by another, the injury shall be imputed to the last wrong as the proximate cause, and not to that which was more remote."

The author refers to cases illustrating these propositions, among others, the celebrated case of Scott v. Shepherd, 3 Wils. 403, 2 W. Bl. 892. In that case defendant threw a lighted squib made of gunpowder from the street into a market house where a large concourse of people were assembled. The squib was thrown from one market stand to another by the keepers of the stands, in self-protection, until it struck the plaintiff in the face, and, exploding, put out one of his eyes. Judge Cooley says of this case:

"Here was but a single wrong, the original act of throwing the dangerous missile; and though the plaintiff would not have been harmed by it, but for the subsequent acts of others throwing it in his direction, yet as these were instinctive and innocent, 'it is the same as if a cracker had been flung, which had bounded and rebounded, again and again, before it had struck out the plaintiff's eye,' and the injury is therefore a natural and proximate result of the original act. It is an injury that should have been foreseen by ordinary forecast; and, the circumstances conjoined with it to produce the injury being perfectly natural, these circumstances should have been anticipated."

The evidence in the present case tends to show that there was negligence on the part of the defendant in maintaining a defective water pipe, and that there was a natural and continuing sequence uninterruptedly connecting this breach of duty with the injury to the plaintiff. There was but a single wrong, and this wrong constituted an invasion of plaintiff's right to a reasonably safe place in which to work. There was evidence that the injury to plaintiff was a natural one under the circumstances, and should have been anticipated by a reasonably careful and prudent employer. The case comes, therefore, under Judge Cooley's first proposition.

Upon the evidence the court gave the following instructions:

"Your object all the time will be to determine whether there was that degree of negligence which amounted to a breach of duty which an employer owes to the employés. The employer is not legally obligated to insure absolute safety to employés. The obligation of the employer is to exercise the same degree of care for the safety of employés that men of ordinary sense and prudence habitually exercise for their own safety, so as not to expose

employés to dangers and hazards which prudent men do not voluntarily and ordinarily expose themselves to. It is the duty of the employers of labor, who are operating machines or dangerous machinery, to constantly inspect and see that the machinery and appliances in places where men are employed shall be kept in a state of repair, so as to be reasonably safe and to avoid the unnecessary dangers.

"If, after having weighed the evidence and reached a conclusion in your own mind as to what the facts are, you come to the conclusion that there was not that degree of negligence, or if you are unable to find that there is a preponderance of the evidence proving that there was that degree of negligence, which amounted to a breach of duty, your verdict will be for the defendant, without investigating the case any further. If, on the other hand, it appears to you to be proved by a fair preponderance of the evidence that the defendant was negligent as charged in the complaint, then you will come to the second inquiry in the case; and that is whether or not that negligence was the direct or the proximate cause of the injury which the plaintiff suffered. If not, even though the defendant was negligent, if that negligence failed to produce the injury, your verdict should be for the defendant. If those two facts concur—that is, if it is proved by a fair preponderance of the evidence that the defendant was negligent as charged in the complaint and that the plaintiff's injury was a consequence of that negligence—then you will have to inquire, further, whether the plaintiff himself brought the injury upon himself by his own contributory negligence. Here the burden of proof is on the other side. You have no right to find the plaintiff guilty of negligence, unless it is proved by a fair preponderance of the evidence that he was negligent; and his negligence is not an element in the case, unless it is so connected by the testimony that you can find that he was negligent and that his negligence was a contributory cause of the injury."

To these instructions no exception was taken by the defendant. We think, upon the evidence before the court, they were correct and sufficiently explicit; and those requested by the defendant erroneous for the reason that they defined proximate cause in such terms as to take from the jury the question whether there was such a degree of negligence on the part of the defendant as amounted to a breach of duty to the plaintiff to furnish him with a reasonably safe passageway through the shaft in going to and from his work to the mine.

The objection to the instructions of the court appears to be that the court did not define proximate cause as a cause from which the specific injury to the plaintiff was the natural and probable consequence, which should have been foreseen and guarded against by an ordinarily careful and prudent person. In other words, the defendant, to be liable for his negligence, must, under the requested instructions, have foreseen that the water escaping from the defective water pipe would have for its natural and probable consequence the particular injury received by the plaintiff. We do not understand this to be the law in a case involving the question whether there was a primary act of negligence on the part of the employer amounting to a breach of duty to the employé, and a natural and continuous sequence connecting this breach of duty with the injury to the employé. If the jury determine this question of primary negligence adversely to the employer, then he is liable for the consequence of his negligent act, and it need not appear that he anticipated or had reason to anticipate an injury to the particular person who was in fact injured, or the particular kind of injury produced.

It is assigned as error that the court refused to instruct the jury that the plaintiff had testified that he knew the pipe was defective and im-

properly installed, and, therefore, likely to leak; that he knew that it did leak; that he had no right to assume that the leak would be repaired; that he was therefore charged with the assumption of all risks and dangers incident to a sudden increase in the amount of water and its force flowing from the leak; and that if he did not properly protect himself, either by assuming a safe place upon the bumpers or by riding inside the car, his own negligence in failing to do so contributed to the injury and was the proximate cause thereof, and the verdict should be for the defendant if they so found. The instruction was properly refused. The knowledge of the plaintiff that the pipe was defective and leaked did not, as a matter of law, deprive him of the right to assume that the pipe would be repaired. Whether the leak from the pipe might suddenly and unexpectedly increase, as the evidence tended to show that it did, was a question of fact for the jury; and whether, under all the circumstances, the plaintiff assumed the risk of the employment, was a question of fact for the jury, to be determined under proper instructions. Such instructions were given by the court, and no exception taken.

Finding no error in the record, the judgment of the Circuit Court is affirmed.

(172 Fed. 792.)

THE SALTON SEA CASES.†

CALIFORNIA DEVELOPMENT CO. v. NEW LIVERPOOL SALT CO.

(Circuit Court of Appeals, Ninth Circuit. August 2, 1909.)

No. 1,584.

1. WATERS AND WATER COURSES (§ 177*)—GROUNDS—FLOWAGE—INJUNCTION.

A court of equity has jurisdiction to enjoin the diversion of water from a stream by means of canals, whereby the property of complainant is flooded and threatened with irreparable injury.

[Ed. Note.—For other cases, see Waters and Water Courses, Cent. Dig. §§ 260, 264; Dec. Dig. § 177.*]

2. INJUNCTION (§ 197*)—CONTINUING TRESPASS—DAMAGES IN ADDITION TO INJUNCTION.

Where a court of equity has acquired jurisdiction of a suit to enjoin a continuing trespass upon land, it may also, to prevent a multiplicity of suits, award damages for the injury already done, although the same would also be recoverable by an action at law.

[Ed. Note.—For other cases, see Injunction, Cent. Dig. § 417; Dec. Dig. § 197.*]

3. COURTS (§ 262*)—JURISDICTION—ADEQUATE REMEDY AT LAW—FEDERAL STATUTE.

Rev. St. § 723 (U. S. Comp. St. 1901, p. 583), providing that suits in equity shall not be sustained in either of the courts of the United States in any case where a plain, adequate, and complete remedy may be had at law, is merely declaratory, and does not narrow the jurisdiction of courts of equity, nor prevent the granting of legal relief therein where jurisdiction has been acquired to grant equitable relief, and the legal remedy is not as practical and efficient.

[Ed. Note.—For other cases, see Courts, Cent. Dig. § 798; Dec. Dig. § 262.*]

---

† Rehearing denied October 4, 1909.

4. WATERS AND WATER COURSES (§ 263*)—SUIT TO ENJOIN INJURY BY FLOWAGE—PARTIES.

Defendant corporation undertook to divert water from the Colorado river near the boundary line between California and Mexico through canals for irrigation purposes. It contracted with a Mexican company, which it owned, and with other local irrigation companies which it organized in California, to deliver water to their canals and ditches. It constructed three intakes from the river, two of which were on Mexican territory on land of the Mexican company and nominally under its control, but which were, in fact, constructed and controlled by defendant. These intakes were so constructed without controlling gates that in a time of flood one of those in Mexico was so enlarged by washing that a large part of the water of the river poured through and passing through canals of the other companies overflowed and damaged, and finally destroyed the property of complainant situated in the Salton Basin below the level of the river. *Held*, that having sole control of the intakes, from the improper construction of which the damage resulted, defendant was responsible therefor, and that to a suit to enjoin further flooding and to recover for the damage done the other corporations were not necessary parties.

[Ed. Note.—For other cases, see Waters and Water Courses, Dec. Dig. § 263.*]

5. EQUITY (§ 36*)—PREVENTING INJURY TO REAL PROPERTY—JURISDICTION OF COURT.

A court of equity having jurisdiction of the parties may enjoin a continuing injury to real property within its jurisdiction by flooding caused by the improper construction of works maintained by defendant for diverting the water of a river into a canal, although such works are across the boundary within the republic of Mexico.

[Ed. Note.—For other cases, see Equity, Cent. Dig. §§ 94, 96; Dec. Dig. § 36.*]

6. WATERS AND WATER COURSES (§ 177*)—INJURY TO REAL ESTATE—INJUNCTION.

A court of equity has jurisdiction to enjoin the maintenance of works which caused the flooding and injury of lands owned by complainant, notwithstanding the fact that pending the suit the flooding continued and entirely destroyed the present value of the property for which damages were awarded; the title to the land still remaining in complainant.

[Ed. Note.—For other cases, see Waters and Water Courses, Cent. Dig. §§ 260–264; Dec. Dig. § 177.*]

7. WATERS AND WATER COURSES (§ 262*)—IRRIGATION COMPANIES—LIABILITY FOR FLOODING OF LANDS—CONCURRING NATURAL CAUSES.

An irrigation company which negligently constructed the intakes from the Colorado river into its canal without headgates or other means of controlling the flow, by reason of which in a time of flood the water flowed through in such volume as to wash away the river bank and overflow the lands of others, is not relieved from liability therefor by the fact that the flood was extraordinary.

[Ed. Note.—For other cases, see Waters and Water Courses, Dec. Dig. § 262.*]

Appeal from the Circuit Court of the United States for the Southern Division of the Southern District of California.

See, also, 97 C. C. A. 242, 172 Fed. 820.

John S. Chapman and E. A. Meserve (Eugene S. Ives, of counsel), for appellant.

Edward J. McCutchen and Purcell Rowe (Page, McCutchen & Knight, of counsel), for appellee.

Before GILBERT, ROSS, and MORROW, Circuit Judges.

MORROW, Circuit Judge. The Colorado river is formed in the southwestern part of Utah by the junction of the Green river from the north and the Grande river from the northeast; the former rising in the Wind River Mountains of Wyoming, and the latter in the Rocky Mountains of Colorado. The waters of the Colorado river carrying its wash of silt, sand, and earth, and, flowing south and west, empties into the Gulf of California about 75 miles below the international boundary line between the United States and Mexico. It is probable that many centuries ago the Gulf of California extended in a northwesterly direction into what is now known as the Salton Basin in California, but, by reason of the discharge of silt, sand, and earth by the Colorado river into the Gulf of California near Yuma, the present delta has been gradually formed, pushing the waters of the gulf further and further south, and extending the barrier of the delta across the northwest arm of the gulf to the foothills on the southwest, thus separating the Salton Basin from the waters of the gulf. The lowest part of Salton Basin is 287 feet below the level of the sea, and is called the "Salton Sink." There is geological evidence that the Salton Basin was once filled with the salt waters of the gulf, which have since evaporated, leaving the basin practically dry, except when the Colorado river during high water has overflowed its banks and poured into the basin. The river in a normal condition has, however, followed its shifting channel down the delta into the Gulf of California, spreading its deposit of sediment over a constantly enlarging area. The region is arid, but with the aid of irrigation the soil becomes enormously productive. The international boundary line between the United States and Mexico crosses this basin north and west of the Colorado river and its delta. There is a large area of land north and west of the river, both above and below the boundary line, capable of being brought under cultivation by the use of water diverted from the Colorado river.

The present action arises out of such a diversion through intakes for which no provision had been made for the regulation and control of the water drawn from the river into irrigation canals, and as a result the diversion grew to such proportions as to turn nearly the entire Colorado river into the irrigation canals, and through them into the Salton Sink, overflowing the land and destroying much property in that section. This suit was originally commenced by the appellee on March 8, 1905, in the superior court of the state of California in and for the county of Riverside, and later was moved, upon the petition of the appellant, to the United States Circuit Court for the Southern District of California, Southern Division. The appellant is a corporation organized under the laws of the state of New Jersey. The appellee is a corporation organized under the laws of the state of California. The action was brought to recover the damage resulting from the flooding and overflowing of complainant's lands by the defendant's diversion of water from the Colorado river and for an injunction restraining the continuance of such diversion. After the case had been removed to the United States Circuit Court, the complaint was framed as a bill in equity in accordance with the practice of federal courts. The bill of

complaint alleged that complainant, the New Liverpool Salt Company, was a corporation duly organized and existing under the laws of the state of California, with its principal place of business at Los Angeles, Cal.; that it was the owner of certain tracts of land situated in township 8 south, range 10 east, San Bernardino meridian, and was engaged in the business of mining, gathering, and refining salt, owning and operating a plant for the manufacture of salt, consisting of a mill, drying sheds, and warehouses, equipped with the necessary machinery for reducing and refining salt; that this plant was situated upon the northeast quarter of section 14 in said township; that the buildings and equipment were valued at more than $50,000; that it carried on an extensive business, selling many thousands of tons of salt yearly; and that sections 15 and 23 of the lands in said township and owned by complainant were of great value because of their salt deposits; that the Colorado river is a large and navigable stream of water, carrying many thousand second feet of water, and flowing naturally from its sources in Colorado, Nevada, and Utah, to the Gulf of California, and that no part of the waters of said river flow naturally upon or near the lands of complainant above described. It is alleged that defendant had carried on the business of diverting the waters of the Colorado river by means of three intakes constructed for that purpose, carrying the water of the river to Calexico, Cal., distributing it for irrigation purposes by means of various canals; that defendant by means of said intakes and canal had been for many months, and then was, diverting from the Colorado river a stream of water varying in amount of flow from 800 to 3,000 cubic feet per second, which flow of water, after entering said canal, was carried therein and thereby to various points, passing into the New river, the Alamo river, and various waste and distributing canals. It is alleged that the lands of the complainant were about 280 feet below sea level; that, by reason of the contour and slope of the land from the points to which the water is carried by the defendant, the water except such as was absorbed and evaporated found its way through the various waste and distributing canals and water courses to the Salton Sink and to the lands of the complainant; that, for a period of more than six months, defendant had been diverting a large amount of water, and that a flow of between 300 and 500 cubic feet per second passed through this canal in excess of the amount absorbed, evaporated, or used for irrigation purposes; that such an amount of water had been for three months continually wasting from the canal system of defendant and pouring into Salton Sink, making a lake over 20 miles in length and several miles in width, overflowing and covering completely certain sections of complainant's lands, and had reached within 200 feet of its mill, compelling complainant to erect and maintain dykes; that the water was continuing to increase, and, if not checked, would overflow the dykes and flood the ground about the buildings, and destroy many thousand tons of salt which belonged to complainant and was piled upon the ground; that this water carried large quantities of sand and silt which was being deposited upon the lands covered by the salt, thereby covering up the salt deposits, and making it impure and more diffi-

cult to mine; that the railroad which complainant owned and operated had been entirely covered by the overflow of waste water and the sand and silt deposits; that this waste water was still running into the lake in large quantities, increasing its size because no provision had been made by defendant at its intakes for the regulation and control of the waters; and, that if this flow was not stopped, complainant would suffer irreparable loss, and eventually its property and business would be destroyed, to its damage in a sum exceeding $200,000. It was alleged that the complainant had no speedy or adequate remedy at law. The principal facts stated in the bill are supported by affidavits attached to the original complaint. A temporary injunction was issued as prayed for in the complaint.

As the waters increased and the damage became greater, complainant on January 29, 1906, filed a supplemental bill containing the same allegations, and alleging that, by the continuance and increase in the amount of the flood, additional damage had been done its lands and salt deposits in the sum of $180,000, and that its plant had been utterly destroyed, whereby complainant had sustained a further loss of $30,000. On December 19, 1907, complainant filed an amendment to this supplemental bill, substituting $325,000 for $180,000 as additional damage to its lands and salt deposits, and substituting $75,000 in place of $30,000 as the damage to its sheds, mill, and machinery. This amended and supplemental bill was filed after the complete destruction of complainant's plant, when damage was asked for in the above amounts, and a writ of injunction prayed for enjoining defendant from diverting said waters unless suitable headgates were provided to control the water, so that the flow would not be in excess of the amount used for irrigation purposes. To the bill the defendant demurred upon the ground that it appeared upon the face of the bill that complainant was not entitled to the relief prayed for; that the bill was multifarious because it united two different suits, one for legal, and the other for equitable, relief, and that the same could not be united; that the causes set forth in the bill were not within the jurisdiction of the court sitting as a court of equity. The demurrer was overruled, and thereupon the defendant answered the bill, and subsequently filed an amended answer to the bill and supplemental bill. The defendant in its answer denied generally the allegations of the complaint; admitted that complainant's land was below the level of the sea, and in what was known as Salton Sink, and that water flowing into the New river or Alamo river naturally found its way to the Salton Sink unless diverted from said rivers; admitted that waste water at the time of the filing of the bill was still running into the lake and increasing its size, but alleged that the waters referred to were diverted from the Colorado river in Mexico by a corporation organized under the laws of the republic of Mexico, known as La Sociedad de Yrrigacion y Terrenos de la Baja California (Sociedad Anonima), which corporation owned all canals leading from the Colorado river in Mexico to the town of Calexico, Cal.; and denied that it diverted any water from the Colorado river which flowed into either the Alamo or New river or upon any of complainant's land; denied, further, that there were no streams of water which naturally run upon

complainant's lands, and alleged that flood water coming down from Alamo and New rivers, in flood times, such as existed during the years 1904–05, and particularly during the winter season of 1905, and waters flowing from the natural drainage from the mountains and surrounding locality of Salton Sink, would flow upon complainant's lands; alleged that the natural flow of these waters would be to the lands of complainant, and that Salton Sink without any water being carried there by canals in 1905 would have become a lake and overflowed complainant's lands; alleged that, if the canals had not been constructed and the waters coming down Colorado river had been allowed to take their natural course, they would have overflowed the banks of the Colorado river, flowed into the channels therefrom, and found their way over the surrounding country through the sloughs and bayous into Salton and Alamo rivers, then to Salton Sink, and to and upon the lands of complainant, and that, if these canals had not been constructed, all of complainant's lands would have been overflowed by these waters; further alleged that, if the flow of waste waters were stopped and defendant not permitted to divert the waters of the Colorado river into the lake, the same would evaporate and disappear, and that it was not diverting any of the waters of the Colorado river into this lake, and denied that complainant had suffered the damage alleged, or any damage at all. In an amended answer it further denied that complainant had since the commencement of the action or by reason of any acts of defendant been damaged in any sum whatsoever.

Defendant set up in its answer: That certain public land of the United States in San Diego county, Cal., known as Imperial Valley, was practically desert land, being of a dry and sandy character, but with proper irrigation could be made fertile and valuable. That in 1896 the defendant California Development Company was organized under the laws of the state of New Jersey for the purpose of obtaining water from the Colorado river to supply said Imperial Valley, together with a large tract of land in the republic of Mexico. That defendant, through an arrangement with a Mexican corporation, undertook to divert the waters of the Colorado river at a point a short distance above the boundary between the United States and Mexico, and by means of a canal to conduct this water through the Mexican tract and to the boundary line between the United States and Mexico for irrigation purposes in both republics. That defendant in 1900 began the construction of a canal which when completed ran through, down to, and across the lands in Mexico and to the boundary westerly from the Colorado river. That divers water companies were organized under the laws of the state of California, and known, respectively, as Imperial Water Companies Nos. 1 to 8, inclusive, which were organized for the purpose of taking the waters from the said canals and furnishing it to settlers upon the lands situated in San Diego county, Cal., for irrigation and domestic purposes, and contracts were entered into between the defendant and the several Imperial Water Companies for furnishing this water. That in pursuance of these contracts divers lateral canals were constructed by them, through which the waters so diverted by the said canals were to be delivered and distributed to the settlers

upon the said tracts. That these several lateral canals were completed, and a large amount of the lands in Imperial Valley had been settled upon by persons who became purchasers of stock in said several water companies. That, prior to the commencement of this suit, over 100,000 acres of land in Imperial Valley had been brought under cultivation, and water had been furnished to the owners of this land and settlers thereon for irrigation and domestic uses, and that the lands had proven to be of great agricultural value. That for more than two years defendant had furnished the several Imperial Water Companies from the main canal connecting with the Colorado river. That this canal at its head had become filled up with silt, so that it was incapable of carrying water sufficient to furnish the owners and settlers of the valley with water in quantities sufficient to insure the successful cultivation of their lands, and for that reason a second canal was constructed a few miles south of the first intake, which also became silted, and in the course of time a third intake was made because of the prospective demand for water during the season of 1904. Meantime towns had sprung up in the valley which were to be supplied with water, and there were more than 10,000 people who were dependent upon this water for irrigation and domestic usages. That in the construction of these canals—both the main canal, intakes, and laterals—defendant had provided for the use of water diverted thereby, and for taking care of the same by wasting upon a broad expanse of territory more than 25 miles south of Salton Sink in such a way that under ordinary conditions, and conditions which from the past conditions could be foreseen, the waters could have been handled and distributed so that no injury would have occurred to the property of complainant. But in 1904 and 1905 the rains falling in that locality and in the surrounding mountains were greatly in excess of anything that had occurred previously which made the demand for water less than it otherwise would have been; also later in 1904 and 1905, and particularly in the summer of 1905, enormous floods occurred in the Colorado river with greater frequency and longer duration than had ever been known to occur before, and because of these and the overflow of the Colorado river the main canal became washed out and vast amounts of water from the Colorado river continued to flow through it until practically all the waters of the Colorado river were flowing through this canal, and defendant alleged that but for this canal Salton Sink would have been filled to an extent probably greater than was actually experienced. That these canals by embankments thrown up in their construction prevented a large amount of water flowing from the Colorado river into Salton Sink by diverting it into other directions. It alleged that more than $250,000 had been spent for the construction of its irrigation system, and that not less than $5,000,000 had been spent in the settlement and improvement of Imperial Valley, and that the value of this property dependent upon the waters from said water system for irrigation and domestic purposes exceeded $10,000,000, and that this property would be rendered worthless without the use of these waters, and alleged that there was no other source from which the people can be supplied with water. It further alleged that since the floods began it had spent large sums of money to prevent these overflows, exclude the

flood waters, and confine the river to its natural channel, and alleged that it had not been by any act or negligence on its part that the floods have filled Salton Sink, but that the lake was caused by the enormous, frequent, and long-continued floods of the Colorado river.

The complainant filed its replication and upon the issues thus presented testimony was taken, and thereafter a decree was entered by the court in favor of the complainant perpetually restraining and enjoining the defendant from diverting from the Colorado river any of the waters thereof in excess of the substantial needs of the people dependent upon the canal described in complainant's bill of complaint for water supply for domestic and irrigation uses and purposes, and such other lawful purposes as the same might be applied to; that the water so diverted, whatever might be the amount, should be so controlled and used that the same should not flow upon the lands of the complainant described in the bill of complaint; that the defendant regulate the flow of any water that might be diverted by it so that there should be no waste water flowing therefrom as the result of such diversion upon or over the lands of complainant; that defendant should be restrained from turning out of its canals any waste water at any point whence the same would naturally flow upon or over the lands of complainant or into the lake covering the Salton Sink, and thereby substantially increase the amount of water therein, or prevent the decrease thereof by any causes. It was further adjudged that the complainant had been damaged in the sum of $456,746.23 by reason of the commission of the acts mentioned in the bill of complaint by defendant, that complainant was entitled to recover compensation therefor; and it was ordered, adjudged, and decreed that complainant should have and recover from the defendant the said sum of $456,746.23, together with costs and disbursements. The defendant has brought the case here on appeal.

It is assigned as error that the court sustained the jurisdiction of the Circuit Court as a court of equity to restrain the wrongful diversion of the water of the Colorado river and awarded damages resulting from such diversion. The original bill of complaint invoked the equity jurisdiction of the Circuit Court on the ground that the complainant had no speedy or adequate remedy at law, in that an irreparable injury was then threatened and being done by the continuing act of the defendant in diverting the waters of the Colorado river to such an extent as to overflow complainant's lands and destroy its salt deposits, mill, drying sheds, warehouses, and other property used in reducing and refining salt. In 2 Daniell's Chancery Pleading & Practice (6th Ed.) p. 1631, the rule is stated as follows:

> "An injunction will also be granted in some cases where the parties have both legal titles and legal remedies, but irreparable mischief would be done unless they were entitled to more complete relief than that which they would obtain at law. It has accordingly been granted where the injunction amounted in fact to an injunction to stop a trespass; for, if the court would not interfere against a trespasser, he might go on by repeated acts of damage, which would be absolutely irremediable."

In Erhardt v. Boaro, 113 U. S. 537, 5 Sup. Ct. 560, 28 L. Ed. 1113, the Supreme Court of the United States held that:

"It is now a common practice where irremediable mischief is being done or threatened, going to the destruction of the substance of the estate, such as the extraction of ores from a mine, or the cutting down of timber, or the removal of coal, to issue an injunction, though the title of the premises be in litigation."

To the same effect is Northern Pac. R. Co. v. Hussey, 61 Fed. 231, 9 C. C. A. 463; Oolagah Coal Co. v. McCaleb, 68 Fed. 86, 15 C. C. A. 270; Dimick v. Shaw, 94 Fed. 266, 36 C. C. A. 347. In United States Freehold Land & Emigration Co. v. Gallegos, 89 Fed. 769, 32 C. C. A. 470, the bill of complaint was filed to restrain the defendants from diverting the waters of the Culebra river in Colorado from the natural channel in excess of the amount that they might show themselves lawfully entitled to for irrigation and domestic purposes, such diversion being to the damage of complainant's land. The Circuit Court of Appeals for the Eighth Circuit held that:

"A continuing trespass upon real estate or upon an interest therein, to the serious damage of the complainant, warrants an injunction to restrain it. A suit in equity is generally the only adequate remedy for trespasses continually repeated, because constantly reoccurring actions for damages would be more vexatious and expensive than effective"—citing cases.

In Dimick v. Shaw, 94 Fed. 266, 36 C. C. A. 347, the appeal was from an interlocutory order granting a temporary injunction restraining the appellants from working a mine, and from extracting or removing ores therefrom. The title to the mine had been in litigation between the parties, but had been finally determined in favor of the appellee. While the litigation was pending the appellants went into possession of the land in controversy under the verbal permission of the appellee's manager for the purpose of prospecting only until the final determination of the case. After the case had been determined, the appellants had been notified to quit the premises, but refused, and had commenced mining operations on a larger scale, and continued their mining operations and trespasses. In the Circuit Court of Appeals it was contended that appellee had a complete and adequate remedy at law, and that the suit in equity deprived the appellants of their constitutional right of a trial by jury. The Circuit Court of Appeals held that the Circuit Court as a court of equity had jurisdiction of the case, referring to authorities, among others, to the case of Oolagah Coal Co. v. McCaleb, 68 Fed. 86, 15 C. C. A. 270, where it had been said:

"It is now well settled by many adjudications, beginning with the case of Mitchell v. Dors, 6 Ves. 147, that an injunction may be granted to restrain a trespasser from entering a mine and removing the minerals therefrom. Trespasses of that kind, as well as those which consist in cutting down and removing timber, or in removing buildings or other improvements of a permanent character standing upon lands, are readily enjoined, because, as has sometimes been said, such acts tend to destroy the estate, and to occasion irreparable loss and damage."

In Story's Equity Jurisprudence, § 927, it is said:

"Cases of a nature calling for the like remedial interposition of courts of equity are the obstruction of water courses, the diversion of streams from mills, the back flowage on mills, and the pulling down of the banks of rivers, and thereby exposing adjacent lands to inundation, or adjacent mills to destruction."

In Learned v. Castle, 78 Cal. 454, 18 Pac. 872, 21 Pac. 11, the Supreme Court of California held that the diversion of waters by a canal whereby the land of another is flooded by water that would not flow there naturally is to create a nuisance per se, for which a court of equity will grant relief by its writ of injunction.

In the present case the title to the land is not in litigation. The right of the complainant to the land claimed by it and to dig and remove the salt therefrom is not in controversy. The question is the right of the complainant to have the aid of a court of equity to protect its estate from destruction. This is clearly a subject of equitable jurisdiction under all the authorities, and, as we understand, it is not controverted; but the question is whether the Circuit Court, having acquired equity jurisdiction of the controversy for the purpose of administering relief by way of injunction, may proceed and award damages for the injuries sustained by the complainant by reason of defendant's diversion of the waters of the Colorado river and the flooding of complainant's land which it was the purpose of the action to enjoin.

It is contended on behalf of the appellant that, as the Constitution of the United States (article 7, § 1) secures the right of trial by jury in all actions at law where the amount in controversy exceeds twenty dollars, the right to such a trial in a federal court cannot be defeated by blending legal and equitable causes of action. But it has been held that this provision correctly interpreted cannot be made to embrace the established exclusive jurisdiction of courts of equity, nor that which they have exercised as concurrent with courts of law. Shields v. Thomas, 59 U. S. 253, 262, 15 L. Ed. 368.

In High on Injunctions (4th Ed.) § 669, the rule is stated as follows:

"Where, therefore, a proper case is presented for an injunction, an account of the waste already committed and a decree for damages may be had in the injunction suit. Indeed, this would seem to be but the exercise of the ordinary prerogative of equity, that, when one resorts to a court of equity for one purpose, his case will be retained until the entire matter is disposed of upon the principle that the court having jurisdiction of the cause for one purpose will retain it to give general and complete relief, thereby preventing a multiplicity of suits."

The same general rule is stated by Pomeroy in section 231 of his work on Equity Jurisprudence, as follows:

"Where a court of equity has obtained jurisdiction over some portion or feature of a controversy, it may, and will, in general, proceed to decide the whole issues, and to award complete relief, although the rights of the parties are strictly legal, and the final remedy granted is of the kind which might be conferred by a court of law."

In section 237 of the same work it is said that:

"Equity therefore assumed a jurisdiction to grant an injunction restraining the commission of actual or threatened waste; and having obtained jurisdiction for the purpose of awarding this special relief, which, in many instances, is not complete, the court will retain the cause, and decree full and final relief, including damages, and, when necessary, an abatement of whatever creates the waste or causes the nuisance."

In 1 Beach, Modern Equity Proceedings, § 91, the author says:

"Upon a bill for an injunction to prevent a threatened trespass, the court may under a prayer for general relief, and, in order to avoid a multiplicity of suits, award damages for the injury done by such trespass before the injunction was issued."

In Winslow v. Nayson, 113 Mass. 411, 421, Mr. Justice Gray, then Chief Justice of the Supreme Judicial Court of Massachusetts (afterwards a Justice of the Supreme Court of the United States), said:

"And the court, having obtained jurisdiction in equity of the case for this purpose (to restrain trespass), may properly, in order to prevent multiplicity of suits, and to do complete justice between the parties under the prayer for general relief, also award damages for the injury already done by the defendants to the plaintiff's premises, instead of obliging them to bring a separate action at law therefor. Jesus College v. Bloom, 3 Atk. 262; Cathcart v. Robinson, 5 Pet. 263, 278, 8 L. Ed. 120; Franklin v. Greene, 2 Allen (Mass.) 519; Creely v. Bay State Brick Co., 103 Mass. 514; Milkman v. Ordway, 106 Mass. 232; Brown v. Gardner, Har. (Mich.) 291."

In Omaha Horse Ry. Co. v. Cable Tramway Co. (C. C.) 32 Fed. 727, 729, 730, in a suit for an injunction against the unlawful construction of a street railway, the defendant moved to dismiss the proceedings with reference to the assessment of damages on the ground that the court had no jurisdiction of such matter. The motion of the defendant was overruled. The court (Judge Brewer, now Mr. Justice Brewer of the Supreme Court) said that:

"Inasmuch as the prayer for relief contains also the general prayer for other and further relief, it is familiar law that the court may award such other relief as is justified by the facts stated in the bill, and may fairly have been considered within the contemplation of the parties in the litigation."

The decree ordered by the court awarded damages. In Woodbury v. Marblehead Water Co., 145 Mass. 509, 15 N. E. 282, the action was to restrain a water company from maintaining its pipes on plaintiff's land. It appeared that the original description of the land taken was not sufficiently accurate for identification, but that, after the bill was filed, the company had made a new taking and filed a complete description of the land with the exception that the names of the owners were omitted. Mr. Justice Holmes (now Mr. Justice Holmes of the Supreme Court) held that the injunction could not be granted, but that the bill might be retained for the assessment of damages, if any, with reference to the injury before the lawful taking.

It is further contended that under the provisions of section 723 of the Revised Statutes (U. S. Comp. St. 1901, p. 583) the court had no jurisdiction to combine legal and equitable remedies and award relief by way of damages in an action for an injunction. Section 723, Rev. St., provides as follows:

"Suits in equity shall not be sustained in either of the courts of the United States in any case where a plain, adequate, and complete remedy may be had at law."

It has been repeatedly decided that this provision is merely declaratory, making no alteration whatever in rules of equity on the subject of legal remedies, but only expressing the law which has governed proceedings in equity since their adoption in the courts of England.

In Bean v. Smith, 2 Mason, 252, 2 Fed. Cas. No. 1174, Mr. Justice Story said:

"I take this clause to be merely affirmative of the general doctrine of courts of equity, and in no sense intended to narrow the jurisdiction of such courts."

In Boyce v. Grundy, 3 Pet. 210, 213, 7 L. Ed. 655, the Supreme Court said:

"This court has been often called upon to consider the sixteenth section of the judiciary act of 1789 (section 723, Revised Statutes), and as often, either expressly or by the course of its decisions, has held that it is merely declaratory, making no alteration whatever in the rules of equity on the subject of legal remedy. It is not enough that there is a remedy at law. It must be plain and adequate, or, in other words, as practical and efficient to the ends of justice and its prompt administration as the remedy in equity."

In Whipple v. Village of Fair Haven, 63 Vt. 221, 21 Atl. 533, the action was to restrain the defendant from flooding the lands of complainant by means of a culvert maintained by the defendant and for damages caused by the discharge of water upon complainant's premises. The court said:

"The defendant also claims that the orators have an adequate remedy at law, and therefore cannot resort to chancery. The case of Field v. West Orange, 36 N. J. Eq. 118; 37 N. J. Eq. 434, above referred to, which is very much like this case in its facts, is full authority for granting the injunction prayed for; and it is a familiar rule that, when a court of chancery has jurisdiction of a case for one purpose, it will retain it for all other purposes, and dispose of the whole matter. And this is a salutary rule, for it prevents litigation, and to that end is for the public good."

We do not find anything in the authorities cited by the appellant in conflict with the doctrine of these cases, and upon a careful examination of the facts of the present case we do not find that they have any proper application. We are clearly of the opinion that the remedy at law would not have been "as practical and efficient to the ends of justice and its prompt administration" as the remedy afforded by the proceedings in this case.

It is contended that the corporation organized under the laws of the republic of Mexico known as La Sociedad de Yrrigacion y Terrenos de la Baja California (Sociedad Anonima), referred to in the case as the "Mexican Company," and the several water companies, organized for the distribution of water, referred to as "Imperial Water Companies," and designated by number as No. 1, 2, 3, 4, 5, 6, 7, or 8, as the case might be, were all necessary parties. It appears from the testimony that the defendant, the California Development Company, was organized under the laws of the state of New Jersey on April 23, 1896, for the purpose of diverting water from the Colorado river to be supplied to a large tract of land susceptible of irrigation in San Diego county, Cal., and also to supply water to a large tract of land likewise susceptible of irrigation in the republic of Mexico, and lying immediately south of the boundary line between California and the republic of Mexico. The construction of a canal in accordance with the purpose of the defendant corporation originally contemplated a diversion of the water of the Colorado river at a point in California known as "Hanlon's Heading." This was a rocky point on the west

bank reaching down to the river where the diversion could be placed under control. The first actual work of diversion was commenced in October, 1900, by George Chaffey, an engineer, who entered into an agreement with the California Development Company, and who undertook to divert the water and construct the canals in accordance with the proposed system of that company. The point of diversion selected and adopted by Chaffey was a short distance above the international boundary line in California about a mile below the rocky point known as "Hanlon's Heading." The reason given for this selection and making the diversion at that point was the fact that:

"The water could be secured quicker at this point, and Mr. Chaffey thought that he could control it for a time, and could secure water for the settlement much quicker that way, and cheaper, and he made a cut into the river at that point for the purpose of serving the settlements as quickly as possible and as cheaply as possible."

It was not intended to be a permanent work, but "it was called a temporary heading." From this point of diversion by the line of the canal to the point where the canal crossed into Mexico the distance was about 1,600 feet. It was the purpose of the defendant corporation to purchase the lands in the republic of Mexico, but it was found that under the laws of that Republic American citizens could not buy land within a certain prohibited zone except by special permission of the president of the republic of Mexico. Accordingly there was organized the "Mexican Company" having a small capital stock. The title to the land in Mexico and the channel of the Alamo river were vested in this Mexican Company. All the stock of the company, with the knowledge of the authorities of Mexico, was owned by the California Development Company, and the directors of the Mexican Company being all American citizens, there being, however, a Mexican citizen, a resident of Los Angeles, retained by requirement as secretary, and on whom all papers were served by the Mexican government. The charter of the Mexican Company provided that the principal place of business and the place where the annual election was to be held was Mexicala, in Mexico, just across the boundary line from Calexico, in California.

There was introduced in evidence a message from the President of the United States addressed to the Senate and House of Representatives relative to the threatened destruction by the overflow of the Colorado river into the sink or depression known as the Imperial Valley or Salton Sink Region dated, January 12, 1907. Attached to the message are a number of papers, including a statement made by Edwin A. Meserve, attorney for the California Development Company, which contains the following:

"About this time, the California Development Company, in the name of the Mexican Company, was granted by the republic of Mexico a concession by which it was permitted to take 10,000 second-feet of water from the Colorado river, in Mexico, with the right to carry one-half of that water and such water as was delivered to it at the boundary line by the California Development Company, back into the United States; the other one-half of all such waters to be devoted primarily to the irrigation of lands in Lower California, with permission, however, to carry into California all of that one-half of the water which was not needed for use in Mexico. The California Development Company, by

acquiring the title to the lands at Hanlons, had acquired the only site for controlling headgates on the river below what is now known as the Laguna dam. The site also controls what might be called or termed the gateway for the carrying of waters into Mexico and through Mexico again into the United States. By the terms of the concession from the Mexican government to the Mexico Company it was provided that no intake connecting with the Colorado river should be constructed in Mexico until the plans for all proposed structures were first approved by the proper engineering authorities of Mexico."

The time referred to in this statement appears to be the year 1903, when a shortage of water occurred, and the California Development Company found itself obligated to furnish to the settlers of the valley more water than the canal heading would take in, and consequently a second intake from the river to the canal was cut in the spring of 1904, just below the boundary line in Mexico. C. R. Rockwood, an engineer, was a witness on behalf of the defendant upon the trial of the case. From his testimony and that of others it appeared that he was one of the parties who organized the California Development Company; that he discovered from preliminary investigations made in May, 1892, that there was a very large body of fertile land lying to the west and north of the Colorado river, the extent of which he afterwards determined to be in the neighborhood of half a million acres, situated in the state of California, and probably an equal acreage in Lower California, Mexico; that the entire body of land was of a very arid nature, but rich in its soil, and probably would be very productive under irrigation, and his survey showed that the waters of the Colorado river could be distributed upon the land. He estimated that of a total acreage of something over 2,000,000 under the line of gravity flow from the canal heading 50 per cent. of this land would probably be available for agriculture. In its climatic conditions the country was very hot in summer. The annual rainfall he discovered from an investigation of the records was very light. The amount of water required for irrigation would be a maximum. According to his estimate made at the time, he believed that a quantity of water equal to four acre feet per annum for the entire 1,000,000 acres, or 4,000,000 acre feet, would be required during the year for the irrigation of the tract in Imperial Valley. This valley is immediately north of the international boundary line, and forms part of the Salton Basin in California. Reports were made to a corporation for which the witness Rockwood was then working, but the project for an irrigation enterprise failed and went to the wall for the time being. During 1895 he took up the project again, and associated with himself various individuals, and the result of it was the formation of the California Development Company in 1896. He and his associates then undertook the work of promotion. In order to do that, they entered into a contract for the purchase of 350,000 acres of land in Mexico, extending from the Colorado river through to the Cocopah Mountains on the west, and from the international boundary line between the river and Mexico to a line far enough south to include the 350,000 acres. This contract was afterwards cut down to 100,000 acres, and with this as a basis they undertook the capitalization of the company; but for various reasons they were unable to secure funds for the actual construction of the work until the year 1900. The work referred to related to

the diversion of the water from the Colorado river for the purpose of irrigating the lands embraced in the project. He intended to conduct the water from the river to a distance of about 14 miles by constructing a canal at a point where it would be carried into what is now known as the Alamo river. The Alamo river is a stream flowing in the direction of the Salton Sink. From the point where the canal would connect with the river the water would flow to the west, northwest, and across the international line into California. It was to cross the international boundary line at a point about seven miles east of what was afterwards known as Calexico. At this point it was the intention to put in diversion works across the Alamo to raise the water to the ground surface for distribution in California. It was originally intended to carry the water from Hanlon's Heading above the first intake on the Colorado river to a point on the Southern Pacific Railroad designated as Coachella. This point is west of the Salton Sink. The distance by the line of the canal between these points was estimated to be about 150 miles. The distance from Hanlon's Heading to the point of diversion at the international line east of Calexico would be about 49 miles by the road, and by the line of the canal, following the crooks and bends of the Alamo river, about 85 miles. The Alamo river was to be utilized as a part of the canal. The witness testified that the canal flowed along the channel of the Alamo river for a distance of 60 miles. In carrying out the scheme of the California Development Company to construct a system of canals for the distribution of the water diverted by it from the Colorado river, it entered into a contract with the Mexican Company on December 28, 1900, as follows:

"This indenture, made and entered into this 28th day of December, 1900, by and between the California Development Company, a corporation, duly organized and existing under and by virtue of the laws of the state of New Jersey, one of the United States, party of the first part, and La Sociedad de Yrrigacion y Terrenos de la Baja California (Sociedad Anonima), a corporation duly organized and existing under and by virtue of the laws of the republic of Mexico, party of the second part, witnesseth, that:

"Whereas, party of the first part is the owner of a certain tract of land situated in the county of San Diego, state of California, and particularly described as follows, namely: Lots three (3) and four (4), of section twenty-five (25), and the southeast quarter of section twenty-six (26), and lots one (1), two (2), three (3), and five (5), and the northwest quarter of the northeast quarter of section thirty-five (35); and lot one (1) of section thirty-six (36) in township sixteen (16) south, range twenty-one (21) east, San Bernardino Base and Meridian, containing 318.51 acres of land, more or less, according to the United States government survey; and,

"Whereas, the first party has appropriated and is the owner of a large amount of the waters of the Colorado river, and is engaged in the diversion of said waters from said Colorado river upon the lands so owned by party of the first part aforesaid, and is engaged in the construction of head-works and a canal upon said land, for the purpose of diverting said waters, and is engaged in the construction of an irrigation system, and a system of canals whereby the waters of the Colorado river so diverted upon the said land of first party as hereinbefore alleged, may be used for the irrigation of large tracts of land in Lower California, republic of Mexico, and in the state of California, United States of America; and,

"Whereas, said party of the second part is the owner of a tract of land containing about one hundred thousand (100,000) acres, situated in Lower California, republic of Mexico, a portion of which said tract of land is situated

adjoining and immediately south of the international boundary line between the United States of America and the republic of Mexico; and,

"Whereas, the irrigation system and system of canals so being constructed by party of the first part crosses said international line from a point upon the land so owned by party of the first part, to a point upon the land so owned by party of the second part; and,

"Whereas, the proposed extension of said canals and irrigation system extends through and across the lands of party of the second part in a generally southwesterly direction, and then in a generally northwesterly direction across the lands of party of the second part to various points upon said international boundary line, from which lands in California, United States of America, can be irrigated, and also extends to other points upon the land of second party from which the said land of second party and other lands in Lower California, republic of Mexico, can be irrigated; and,

"Whereas, party of the second part has entered into a certain contract with Imperial Water Company No. 1, a corporation organized and existing under and by virtue of the laws of the state of California, United States of America, whereby party of the second part agrees to deliver to said Imperial Water Company No. 1, at a point upon said international line a certain amount of water; and,

"Whereas, party of the second part contemplates entering into additional contracts with other water companies already formed or to be formed in the state of California, for the purpose of delivering to said water companies a large amount of water for the purpose of irrigating certain tracts of land situated in the state of California, which are irrigable from the proposed system and system of canals so to be constructed by party of the first part as hereinbefore stated; and,

"Whereas, party of the second part desires to obtain water for the purpose of complying with the contract so entered into between it (party of the second part) and said Imperial Water Company No. 1, and desires to obtain water for the purpose of complying with the contracts so proposed to be entered into between party of the second part and said corporations already incorporated in the state of California, and said corporations proposed to be incorporated in the state of California; and,

"Whereas, party of the second part desires to obtain a supply of water for the purpose of irrigating the lands so belonging to party of the second part as aforesaid; and,

"Whereas, party of the second part desires to obtain water for the purpose of furnishing the same for the irrigation of other lands situated in Lower California, republic of Mexico; and,

"Whereas, under the contract so entered into between party of the second part, and said Imperial Water Company No. 1, said Imperial Water Company No. 1 has granted to party of the second part the right to sell all of the water stock of it (Imperial Water Company No. 1); and,

"Whereas, party of the second part proposes to obtain similar contracts from other California corporations formed or to be formed;

"Now, therefore, in consideration of the obligations hereinafter imposed upon party of the second part, party of the first part hereby agrees:

"I. To build a system of canals from the point upon the lands of party of the first part, where said water is to be delivered from said Colorado river to and across said international line and across the lands of party of the second part to other points upon said international line from which large tracts of lands situated in the state of California, United States of America, can be irrigated; and also a system of canals from said point upon the Colorado river where said water is to be diverted from which the lands of party of the second part and other lands situated in Lower California, republic of Mexico, can be irrigated.

"II. Party of the first part further agrees to perpetually deliver to party of the second part a sufficient amount of the water so appropriated, owned and diverted, or to be in the future appropriated or diverted by party of the first part from the Colorado river, to enable party of the second part to furnish water for the irrigation of the lands situated in Lower California, republic of Mexico, and state of California, United States of America, which

are irrigable by gravity from the system of canals and irrigating system so to be constructed. Said waters so to be delivered by said system of canals to form an irrigation system for the purpose of irrigating lands situated in California, United States of America, and in Lower California, republic of Mexico, which are irrigable from the Colorado river by gravity. Said agreement to deliver said waters is made subject to and dependent upon the following conditions, namely:

"(1) No contract made or to be made whereby party of the second part has agreed or in the future shall or will agree to grant, transfer, deliver, or in any manner convey the right to use any of said waters to any person or corporation shall, by reason of priority in date, or any other reason, give to such person or corporation any prior or superior right over any other person or corporation who shall in any manner acquire from second party the right to use any portion of said waters.

"(2) Party of the first part shall not be responsible for a failure to deliver the water hereby agreed to be delivered from any cause beyond its control, but party of the first part shall use due diligence in protecting the system of canals so to be constructed by it as aforesaid, and in restoring and maintaining the flow of water therein.

"III. Party of the first part further agrees that it will keep said canals so to be constructed by it, as aforesaid, in repair at its own cost and expense, and that it will enlarge the same from time to time as may be necessary for the purpose of complying with the provisions of this agreement.

"IV. In consideration of the obligations herein incurred by party of the first part, party of the second part hereby grants, assigns and transfers to party of the first part all right which it, party of the second part, has in and to the stock of said Imperial Water Company No. 1, and all right which it has to receive any of the moneys which would otherwise be due and payable to party of the second part under said contract with said Imperial Water Company No. 1, from the sale of the stock of said Imperial Water Company No. 1. Second party further agrees that it will make like assignments in the future of all rights which it may acquire under contracts similar to said contract with Imperial Water Company No. 1, which it may make with other water companies in the state of California for the sale of the stock of said companies, or the proceeds to be derived therefrom.

"In witness whereof, party of the first part has caused its corporate name and seal to be hereunto affixed by its president and secretary, thereunto duly authorized by resolution of its board of directors; and,

"In witness whereof, party of the second part has caused its corporate name and seal to be hereunto affixed by its vice-president and secretary, thereunto duly authorized by resolution of its board of directors.

"Executed in duplicate the day and year first above written."

[Signed by the parties to the instrument.]

With respect to the relation of the California Development Company to the several so-called "Mutual Water Companies," organized under the laws of the state of California, it appears from the testimony that of the eight companies only six developed into active organizations, namely, Imperial Water Companies, Numbered 1, 4, 5, 6, 7, and 8. No. 2 was merged with No. 4, and No. 3 never became active. In an agreement entered into between the Mexican Company (referred to in the agreement as party of the first part) and Imperial Water Company No. 1 (referred to as party of the second part) and the California Development Company (referred to as party of the third part), dated July 24, 1901, the agreement of December 28, 1900, between the California Development Company and the Mexican Company is referred to and made a part of the agreement between the Mexican Company and the Water Company and the California Development Company. The agreement provides among other things as follows:

"VII. Third party hereby agrees that it will construct and maintain a main canal commencing at the point upon said international boundary line where said water is to be delivered to second party, and continuing from said point of commencement, through the lands described in the articles of incorporation of second party; said canal to be of sufficient capacity, either in its original construction or through subsequent enlargements, made from time to time by third party, at its own cost and expense, to convey an amount of water sufficient at all times for the irrigation of the lands owned or located by the stockholders of second party, and being an amount in the aggregate not less than sufficient to furnish four acre-feet of water per annum for each outstanding share of stock of second party. Said canal to be owned and maintained by third party, and third party to have the exclusive right to navigate said canal, and to develop and use all power that may be developed from the waters flowing therein. Third party further agrees to convey the water to be delivered by first party to second party thereunder, through said canal to the lateral ditches to be constructed by it as hereinafter provided.

"VIII. In the event that third party shall fail to construct or maintain the main canal herein agreed to be constructed by it, or to convey and deliver the water agreed by third party to be conveyed through said canal to the lateral ditches to be constructed by third party as hereinafter provided, then the second party shall have the right to enter upon said canal, and to make such additions and repairs thereto and changes therein as may be necessary in order that said canal shall have a capacity sufficient for the conveyance of the water to be conveyed therein hereunder, and second party shall have the right to convey the water through said canal, from the international line to said lateral ditches and the cost of such additions and changes in said canals, and the expense of the conveyance of said water through the same shall be a claim against third party to be recovered by second party from it by suit, if necessary.

"IX. Third party further agrees to construct a system of distributing ditches, together with all necessary gates and water weirs for second party from said canal so as to be constructed by it, as aforesaid, in such manner as to convey the waters from said canal to a point upon each governmental subdivision of 160 acres of land, from which it is practicable to irrigate the same, except as hereinafter provided, except that where the amount of land included in any original entry of any stockholder of second party exceeds 160 acres, then such water shall only be conveyed to such point upon the land included in such original entry; such distributing ditches to be thereafter owned and maintained by second party. Each and all lateral ditch or ditches, as soon as completed, to be turned over to second party and to be thereafter owned, possessed, controlled and maintained by it.

"Said lateral ditches to be constructed wherever necessary to irrigate the lands owned or located by the stockholders of second party, and to be either as originally constructed, or by subsequent enlargement, of ample size to convey to the stockholders of second party an amount of water equal to two-thirds of one (1) acre-foot per month for each share of stock of second party owned by them; Provided, that if any of the stock of second party shall have been sold by third party, and located upon any tract of land, which cannot at an expense of more than double the average cost of the construction of said lateral ditches, be irrigated by gravity from said lateral ditches, then third party at its option, may refund to the owner of the stock, which has been located upon said tract of land which cannot be irrigated as aforesaid, an amount of money for each share of stock located upon such land, which together with any balance then due to third party upon such stock shall equal the price at which third party is then selling such stock, and that upon making such payment, such stock shall thereupon be assigned to third party, and that by tendering said amount, third party shall be relieved from all obligation to construct such lateral ditches in such manner as to enable the owner of such land to irrigate the same therefrom.

* * * * * * * * * * * *

"XIII. * * * That the main canal and system of lateral ditches to be constructed by third party hereunder shall be in operation by the first of January, 1902."

An agreement was entered into between the California Development Company and the Mexican Company and each of the other water companies in substantially the same terms as that with the Imperial Water Company No. 1. In the course of the hearing it was admitted by counsel for the California Development Company that that company incorporated the subsidiary water companies and made the contracts with them, and controlled them by its power over the stock. The diversion of water from the Colorado river was made through three intakes, one in California, and the other two in Lower California or Mexico. Intake No. 1 was commenced in October, 1900. The first water distributed or used for irrigation was drawn through this intake and carried by canal and the channel of the Alamo river through Mexican territory back to the international boundary line in the neighborhood of Calexico, where the first water was delivered to the water companies in California about June 15, 1901. Intake No. 2 was constructed in 1904, and was located just below the boundary line in Lower California or Mexico. Intake No. 3 was completed October 6, 1904, and was located about four miles below the boundary line, and, like intake No. 2, was in Lower California or Mexico.

The witness C. R. Rockwood testified that the reason for cutting intake No. 2 was purely political; that the right to take water from the Colorado river in the United States had been attacked by the reclamation engineers. The witness says:

"We then obtained concessions from Mexico which gave us the right to take water on Mexican soil from the river."

George C. Sexsmith, a witness called on behalf of the defendant, testified that from 1901 up to July, 1906, he was in the employ of the California Development Company with the exception of about six weeks. He worked on the Mexican end of the irrigation proposition as a sort of foreman. He was also employed in dredging near the upper heading trying to keep the canal open. His instructions were to keep the canal open if possible, but it silted up as fast as the silt could be removed. The machines employed were a dipper dredge and a hydraulic dredge; but with these two dredges he was not able to keep the canal free and open, so a by-pass was cut around the Chaffey gate to get more water into the canal. But even with the by-pass there was a shortage of water in the canal at the extreme low stage of the river. They closed up the by-pass when floods came down the river. It was opened three times and closed each time. During the times of flood the water was taken into the canal through the Chaffey gate, but the canal silted up from the Chaffey gate to the river. Then a second intake was cut just below the boundary line, and that was used from 2 to 2½ years. The canal was again almost entirely closed with silt when the third intake was cut. The point of diversion of the third intake was selected because they could get water through there and increase the water supply more readily than at any other point. The shortest distance between the river and the canal was at that point. It was simply a matter of removing the material. They were figuring on the shortest distance between the two points. It does not appear from any of this evidence that any provision was made at either of

these intakes for the regulation or control of the water drawn through them into the canal. In the latter part of June or the early part of July, 1904, before making this connection (between the river and the canal through intake No. 3), Mr. Rockwood stated to Mr. Heber, the president of the company (California Development Company), that, if he was furnished with lumber with which to build a controlling gate one month before the time when floods were to be expected, he would not have to close the intake even in the winter season. This Mr. Heber promised he would furnish, expecting to be able to do so, but the financial condition of the company continued to be such that he was never able to furnish the material for this temporary structure. This lower intake silted up once, and had to be dredged in order to keep the water flowing therethrough. The floods in the fall of 1904 came earlier than usual, with the result that the opening at this third intake began to wash and the inflow to increase, and from that day until the close of 1906 the condition continued to grow worse. By the middle of December, 1904, sufficient water was going into the canal through this lower intake to pass into the New river and on through the New river into the Salton Sink, starting what has since been known as the Salton Sea. The current of water flowing into the lower intake commenced to cut or wash some time in February or March, 1905, and while there is testimony that water began to accumulate in the Salton Sink as early as November or December, 1904, the flooding of Salton Basin which is the cause of the present action began about the time of the washing and breaking of the bank of the lower intake.

The California Development Company was beyond question in control of the entire work of diverting the water from the river for this irrigation system. It was so provided in its contract with the Mexican Company and was reaffirmed in the contracts with the Mutual Water Companies. The Mexican Company, if it acted at all, was a mere formal instrument or agent, acting for and under the direction of the California Development Company. It was a creature of the latter company, and the employés who did the work testified that they were employed by the latter company. If it was technically otherwise, they do not appear to have known anything about it. But the important fact is that the California Development Company furnished the means, surveyed the canals, made the diversions from the river to the canals, and was the principal party in carrying forward the scheme. It was therefore charged with the duty of maintaining the intakes in such condition that water flowing through should not carry away the banks, and, admitting a flood, destroy the property of others. But it is claimed with respect to the Mutual Water Companies that they became independent by the sale of the stock of the companies to the settlers. Admitting this to be true, it does not appear that the water companies had any control over the diversion of the water from the Colorado river, and it is this fact that primarily determines whether they or the Mexican Company were necessary parties to this action. The question is: Who was responsible for the diversion of the waters from the Colorado river to the damage of the complainant? The testimony answers that question beyond a doubt. It was the California Development

Company and neither the Mexican Company nor the Mutual Water Companies were therefore necessary parties to this action.

It is objected that the court had no jurisdiction to compel the defendants to construct headgates in the republic of Mexico for the reason that the defendant would not have been permitted by the laws of Mexico to construct such headgates until the plans for such structures had been approved by the proper engineering authority of Mexico. The answer to this objection is the fact shown by the evidence that the only site for controlling headgates on the river below what is known as the Laguna dam, above Yuma, is at Hanlon's Heading, in California. This point was originally selected for that purpose and the title to the land for such headworks was acquired by the California Development Company. "This site," said Mr. Meserve, in his statement attached to the President's message, "also controls what might be called or termed the gateway for the carrying of waters into Mexico, and through Mexico again into the United States." This statement is fully confirmed by the evidence we find in the record. The decree does not compel the defendant to construct headgates in Mexico. The flow of the river into the Salton Sink was finally placed under control in February, 1907, but this was done by placing permanent dams across the breaks in the river bank with a concrete heading in the canal about eight or nine miles below Yuma, and this appears to be the only permanent and effective control that can be placed upon the river below the international boundary line. There is no evidence that the consent of the republic of Mexico was necessary or ever obtained or asked for the building of these dams or the placing of the concrete heading.

It is further objected that the court had no jurisdiction to decree an injunction in effect abating a nuisance caused by the construction of intakes in the republic of Mexico, and it is claimed that there is a rule supporting this objection to the effect that a court of equity can never compel a defendant to do anything which is not capable of being physically done within the territorial jurisdiction of the court. This rule undoubtedly obtains where the property injured is itself outside the jurisdiction of the court, which was the case in Northern Indiana R. Co. v. Michigan Cent. R. Co., 56 U. S. 232, 14 L. Ed. 674, cited by appellant. In that case the action was brought in the United States Circuit Court for the District of Michigan. Relief was prayed for an injury threatened or done to complainant's real estate in Indiana, and to its franchise which was inseparably connected with the realty in that state. The Supreme Court held that the Circuit Court in Michigan was without jurisdiction to protect property in Indiana. The same situation was found in Mississippi & Missouri R. Co. v. Ward, 67 U. S. 485, 17 L. Ed. 311. In that case the action was brought in the District Court of the United States for the District of Iowa. The bill charged the defendant with having created a nuisance by erecting a bridge across the Mississippi river at Rock Island. The complainant was part owner of three steamboats, and commanded one of them. These boats were accustomed to pass through the draw of this bridge in navigating the Mississippi river. It was alleged that the boats were much in-

jured and delayed by the bridge, which it was charged was a great obstruction to navigation. The Illinois draw passage embraced the main channel of the river, and it was through this passage that steamboats had at all times navigated, and it was in the Illinois draw that the complainant's boats sustained the injury alleged in the complaint as special damage. The complainant was therefor suffering an injury to his property by reason of an obstruction in the river in that state, and he brought suit in Iowa for the abatement of the bridge as a nuisance because of its danger to navigation. The trial court ordered the removal of so much of the bridge as was in the state of Iowa; the middle of the Mississippi river being the dividing line between the states of Iowa and Illinois. The Supreme Court of the United States held that the navigation of the river so far as complainant was concerned would not be improved by the removal of the Iowa end of the bridge, and that the court had no jurisdiction over the local object inflicting the injury to complainant's property in Illinois.

In the case of Gilbert v. Moline Water Power & Manufacturing Co., 19 Iowa, 319, it was held that an Iowa court could not restrain a defendant from maintaining a dam across a portion of the channel of the Mississippi river between points in the state of Illinois whereby plaintiff's land in Iowa was overflowed, citing the case of Mississippi & Missouri R. Co. v. Ward, supra, as authority. It does not appear that the overflow of plaintiff's land was because of any negligence on the part of the defendant in erecting or maintaining the dam. It had been maintained for many years, was supposed to have been placed where it was by consent of the state of Illinois, and was a legal structure in that state serving a legitimate and useful purpose. The controversy in the case was over the question of the concurrent jurisdiction of the states of Illinois and Iowa over the Mississippi river in such a case. The jurisdiction was denied. It would seem, however, from the facts stated that the remedy was an action at law for damages in a court of competent jurisdiction. We do not think that the law of such a case is applicable here.

The injury charged in the present case was an injury to property within the jurisdiction of the court, and the party charged with the commission of the injury was also within the jurisdiction of the court. The cause of the injury was not serving a useful purpose for any one, and the relief asked for was that the party causing the injury might be enjoined from continuing to injure complainant's property within the jurisdiction of the court. Why may not a court restrain a party over whom it has jurisdiction from injuring property within its jurisdiction? How does it affect the question of jurisdiction or venue to say that the party on whom the court must act may find it necessary to do things outside the jurisdiction of the court in order to comply with the order of the court? May this not often happen, and would it not happen oftener, if it were determined that such an excuse was sufficient to defeat the jurisdiction of the court? In criminal law he who on one side of a boundary shoots a person on the other side is amenable where the blow is received. Wharton's Criminal Law, § 279. In United States v. Davis, Fed. Cas. No. 14,932, the indictment was for

manslaughter. The accused was master of an American ship lying in the harbor of Raiatea, one of the Society Islands and a foreign government. A gun in the hands of the accused on board the American ship went off, and killed a person on board a schooner belonging to the natives lying in the same harbor. It was held by Mr. Justice Story that the act was in contemplation of law done on board of the foreign schooner where the shot took effect, and that jurisdiction of it belonged to the foreign government, and not to the courts of the United States having jurisdiction over the American ship. In Simpson v. State, 92 Ga. 41, 17 S. E. 984, 22 L. R. A. 248, 44 Am. St. Rep. 75, it was held by the Supreme Court of Georgia that one who in the state of South Carolina aims and fires a pistol at another who at the time is in the state of Georgia is guilty of the offense of "shooting at another in the state of Georgia." The court said:

"Of course, the presence of the accused within this state is essential to make his act one which is done in this state, but the presence need not be actual. It may be constructive. The well-established theory of the law is that, where one puts in force an agency for the commission of crime, he in legal contemplation accompanies the same to the point where it becomes effectual. * * * So, if a man in the state of South Carolina criminally fires a ball into the state of Georgia, the law regards him as accompanying the ball, and as being represented by it up to the point where it strikes."

In the State v. Hall, 114 N. C. 909, 19 S. E. 602, 28 L. R. A. 59, 41 Am. St. Rep. 822, the defendants were indicted, tried, and convicted of the crime of murder in North Carolina upon testimony tending to show that the deceased was wounded and died in the state of Tennessee, and that the fatal wounds were inflicted by the defendants by shooting at the deceased while they were standing within the boundary of the state of North Carolina. It was held by the Supreme Court of North Carolina, citing numerous authorities, that the courts of North Carolina had no authority to prosecute a person for murder who while standing within the boundaries of that state wrongfully shoots across the line and kills a person in another state for the reason that the crime of murder was committed where the shot took effect. In civil actions the jurisdiction of the court depends upon the question whether the action is local or transitory. In Will's Gould on Pleading, p. 268, the author says:

"A local action is one which must still be laid in the county in which the cause of action actually arose. A transitory action may be laid in any county which the plaintiff may prefer."

After referring to the fact that the present locality of actions is founded in some cases on common-law principles, and in others on positive enactments of statute law, a number of actions are mentioned which continue local by the common law, and the author says:

"If, however, a tortious act, committed in one county, occasions damage to land or any other local subject situate in another, an action for the injury thus occasioned may be laid in either of the two counties, at the choice of the party injured. Thus, if by the diversion or obstruction of a water course in the county of A. damage is done to lands, mills, or other real property in the county of B., the party injured may lay his action in either of those two counties."

In England the rule has been stated to be that where the action is founded on two things done in several counties, and both are material or traversable, and the one without the other does not maintain the action, the plaintiff may bring his action in which county he will. Bulwer's Case, 7 Coke Rep. 1a; 77 Eng. Rep. 411. Among the examples given is the following:

"If a man doth not repair a wall in Essex which he ought to repair, whereby my land in Middlesex is drowned, I may bring my action in Essex, for there is the default, as it is adjudged in 7 H. 4. 8, or I may bring in Middlesex, for there I have the damage, as it is proved by 11 R. 2. Action sur le Case, 36."

In Barden v. Crocker, 10 Pick. (Mass.) 383, the rule in the Bulwer Case was held to be decisive of a similar question of jurisdiction in Massachusetts. The action was brought in the county of Plymouth against the defendants for erecting a dam in the county of Bristol, across Taunton Great river, by which the passage of alewives up that river and Nemasket river in Middleborough, in the county of Plymouth, was prevented. It was objected by the defendant that the plaintiff was not entitled to maintain an action in the county of Plymouth. In the Supreme Judicial Court the authorities upon this question are fully discussed, and the court says:

"He [the plaintiff] may unquestionably maintain his action in either county, in Bristol where the obstruction was raised, as well as in Plymouth where the injury was sustained. The law to be collected from Bulwer's Case, 7 Co. 1, is decisive upon this point. 'When one matter in one county is depending upon the matter in another county, the plaintiff may choose in which county he may bring his action.'"

The court also refers to the case of Thompson v. Crocker, 9 Pick. (Mass.) 59, where the cause of action was for flowing back of water upon the plaintiff's mills in the county of Plymouth by a dam which was in the county of Bristol. In that case the action was brought in the county of Plymouth alleging "that the defendants had wrongfully kept up a certain mill dam across the river below the said mills" of plaintiff. It appeared that the defendant's dam was in Taunton in the county of Bristol. The defendants contended that this was a fatal variance from the declaration. The Supreme Judicial Court held the variance immaterial "for the injury done to the plaintiff's mills is the substance of the complaint, and the place where the injury was done, to wit, at the mills, gives the locality of the action, and not the source from which the mischief came."

In Phelps v. McDonald, 99 U. S. 298, 308, 25 L. Ed. 473, the court said:

"Where the necessary parties are before a court of equity, it is immaterial that the res of the controversy, whether it be real or personal property, is beyond the territorial jurisdiction of the tribunal. It has the power to compel the defendant to do all things necessary, according to the lex loci rei sitæ, which he could do voluntarily, to give full effect to the decree against him. Without regard to the situation of the subject-matter, such courts consider the equities between the parties, and decree in personam."

In Miller & Lux v. Rickey (C. C.) 127 Fed. 573, the action was brought in the Circuit Court for the District of Nevada to restrain the defendants from the wrongful diversion of the waters naturally flow-

ing down the stream of both forks of the Walker river having their source in California, and flowing down into and through the state of Nevada, where the lands of the complainant were situated. The alleged diversion was in the state of California, and the injury caused by such diversion was in the state of Nevada. It was contended on behalf of the defendant that the Circuit Court in Nevada was without jurisdiction, first, because the suit was of a local nature, and could not be brought outside of the state of California; second, because the water right in controversy was in California; third, because the wrongs and injury alleged to have been committed by the defendant were committed wholly in the state of California; fourth, that complete relief could not be decreed by the Nevada court in favor of the complainant without reaching the property rights of the defendant which were situated wholly in California. Judge Hawley in an elaborate opinion considered the question of jurisdiction as presented by these objections, and reviewed the authorities upon the subject, meeting and answering the objection raised and urged by the defendants in this case that the court could not send its process to execute its decree into foreign territory. The court says on page 580:

"That this court has jurisdiction over the person of the defendant is unquestioned. It can reach him by injunction, and punish him for contempt if he violates it. This doctrine had its foundation in the equity courts of England at an early day"—citing the case of Penn v. Lord Baltimore, 1 Ves. Sr. 443, 454; 27 Eng. Rep. 1132, 1139, decided in 1750, where Lord Chancellor Hardwicke said:

"As to the court's not enforcing the execution of their judgment, if they could not at all, I agree it would be in vain to make a decree, and that the court cannot enforce their own decree in rem in the present case. But that is not an objection against making a decree in the cause, for the strict primary decree in this court as a court of equity is in personam. * * * In the case of Lord Anglesey of land lying in Ireland I decreed for distinguishing and settling the parts of the estate, though impossible to enforce that decree in rem; but, the party being in England, I could enforce it by process of contempt in personam and sequestration, which is the proper jurisdiction of this court."

The court accordingly maintained its jurisdiction of the action, and on appeal to this court the question was fully considered and the jurisdiction of the Circuit Court sustained. Rickey Land & Cattle Co. v. Miller & Lux, 152 Fed. 11, 81 C. C. A. 207. It may be further stated that in Massie v. Watts, 6 Cranch, 148, 157, 3 L. Ed. 181, Chief Justice Marshall cited the case of Penn v. Lord Baltimore, and made the same application of the doctrine of jurisdiction of courts of equity as was made by Judge Hawley in Miller & Lux v. Rickey. We are of the opinion, therefore, that the court had jurisdiction in the present case to protect property within its jurisdiction, and to restrain the defendant from diverting the waters of the Colorado river to the damage of such property, notwithstanding the defendant may find it necessary in complying with the decree of the court to perform acts beyond the jurisdiction of the court.

The next objection to the decree is that the court was in error in holding that, if when the suit was brought there were grounds for injunction, such grounds had not been removed by the destruction of complainant's works, and by the closing of the breaks in the Colorado

river. The court was of the opinion that the complainant was entitled to have its freehold right protected without regard to the amount of the damage threatened, otherwise the overflow sought to be abated might by prescription ripen into a servitude upon the land. Furthermore, the present safeguards against overflow might be but temporary, while the complainant's remedial rights if it had any, included permanent relief. Defendant's objection is based upon the theory that the decree provides full compensation for the value of complainant's overflowed land as well as for the works destroyed, and that the decree operates as a condemnation of the entire property, leaving nothing in the complainant to be protected by injunction. The answer to this objection is that the land is not destroyed. It is true there is an award of damages for the "salt crust" destroyed, but it does not appear that the "salt crust" was the entire value of the land. It is true, also, that the land is now under water, and is likely to remain so for some time, but the land itself remains the property of the complainant, and in course of time the water may be removed by seepage or evaporation, and the land again become valuable. At all events, the complainant has a right to the land, and the court has determined that this freehold right should be protected. This is clearly the law in this state.

In Learned v. Castle, 78 Cal. 454, 18 Pac. 872, 21 Pac. 11, the action was for damages for an alleged nuisance and for a mandatory injunction to prevent its continuance. It was alleged that plaintiffs were the owners of certain lands in San Joaquin county; that by reason of certain obstructions placed by the defendant across certain sloughs for the purpose of diverting their waters into a canal the waters were prevented from flowing naturally down the sloughs and away from plaintiff's land, and were turned upon complainant's land to their great injury. It was objected, among other things, that the damage was too small to be considered in determining the question of the nuisance. In answer to this objection the court said:

"But the amount of damage, estimated in money, was immaterial. That finding was only as to the damage done in 1878, when there was water on the land from other sources. The findings show that the waters diverted by the canal 'flow' upon plaintiff's land, which would not flow there if allowed to take their natural course; and that the embankments erected by defendants 'cause' such artificial flowing. And to thus wrongfully cause water to flow upon another's land which would not flow there naturally is to create a nuisance per se. It is an injury to the right, and it cannot be continued because other persons (whether jurors or not) might have a low estimate of the damage which it causes. And especially is this so when the continuance of the wrongful act might ripen into a right in the nature of an easement or servitude. Richards v. Dower, 64 Cal. 64, 28 Pac. 113, and cases there cited; Tootle v. Clifton, 22 Ohio St. 247, 10 Am. Rep. 732; Casebeer v. Mowry, 55 Pa. 419, 93 Am. Dec. 766; Wood on Nuisances (2d Ed.) p. 639. The right to an injunction therefore in such a case does not depend upon the extent of the damage measured by a money standard. The maxim, 'De minimis,' etc., does not apply. The main object of the action is to declare a nuisance, and to prevent the continuance by a mandatory injunction."

In Vestal v. Young, 147 Cal. 715, 82 Pac. 381, the plaintiff acquired land by patent from the United States in 1883. In 1865, and while this land was unoccupied land of the United States, the defendants or their grantors constructed across the land a flume ranging from two

to three feet in width and about sixteen inches in depth, and diverted water from Pitt river into said flume, and by means thereof conducted the water across the land to their own adjoining lands, where they used it for beneficial purposes. In the year 1896 defendants, without plaintiff's consent, constructed on plaintiff's land about six rods of ditch on a line different from, and from one to 20 feet distant from, the flume line. In the year 1900 defendants, without plaintiff's consent, extended the six rods of ditch to a ditch four feet in width and three feet in depth, extending across the northern portion of the plaintiff's land for about one-fourth of a mile on a line distant from one to 20 feet from the flume line, but extending in the same direction. Ever since then defendants had carried their water across plaintiff's land by means of the said ditch, and threatened to continue so to do. They had discontinued the use of the flume with the exception of about five rods at the intake of the water from the river. The trial court entered a judgment enjoining the defendants from maintaining the ditch. The Supreme Court, in reviewing this judgment, said:

"It is suggested that the trial court did not find in what particulars the plaintiff will be obstructed in his rights to the free use and possession of his land, or injured in his property, by the maintenance of the ditch. The facts found and detailed above sufficiently show this. By the maintenance and use of the ditch plaintiff is deprived of the free use and possession of his real estate without right—and will be permanently deprived thereof if such maintenance and use are continued. This alone is sufficient to entitle plaintiff to the relief by injunction granted. It is the settled law of this state that irrespective of other damage an injunction will be granted to prohibit the continuance of action that obstructs one in the free use and enjoyment of his land where such action, if continued, will ripen into an easement."

There are a number of objections to the decree directed to the conclusions of the court that the waters which overflowed complainant's lands and destroyed its property were largely, if not entirely, the waters diverted from the Colorado river through defendant's intakes; that defendant was negligent, among other respects, in not selecting proper places for such intakes, and not providing suitable headgates to control the flow of water through the intakes, and that such negligence was the direct and proximate cause of the overflow of complainant's land and the resulting loss of its property; that the flooding of Salton Sink in the year 1905, and the destruction of complainant's property, was occasioned by the fault and negligence of the defendant. We have carefully examined the testimony in this case, and we think it fully supports the conclusions of the court below. It will serve no useful purpose to review this testimony. Its main features are practically uncontradicted. The intakes constructed by the defendant for drawing water from the river into its canals were not properly selected, and were negligently constructed. There were no headgates, or method or device for regulating the amount of water drawn into the canal. The two upper intakes were in succession closed by the deposit of silt, and during the season of flood water coming down the Colorado river in 1905 the banks of the river at the third intake were carried away, and the entire river turned into a channel which carried the flood down into the Salton Basin, destroying complainant's salt works and submerging its land. The diversion of the river was made by the defendant, and

made in such a negligent manner that it resulted in the injury complained of. This was a continuing nuisance and trespass existing at the time of the commencement of the action, and with respect to the land or free-hold estate continuing down to the entry of the decree, for which an injunction was the only plain, adequate, and complete remedy. The fact that an extraordinary flood came down the river contributing to the disaster does not relieve the defendant from responsibility. Under the conditions prevailing in that locality and known to have existed for many years, it was the duty of the defendant to have maintained proper control of the water at its headgates.

In Kinney's Law of Irrigation, the author in section 314 states the law upon this subject as follows:

"It is the duty of all irrigation companies in building ditches, canals, aqueducts, reservoirs, and other works to so construct them that, so far as human foresight can reasonably determine, the lives and property of the people living below them will be safe from breakage and overflow. Where a company constructs a ditch which passes over the land of others, it is bound to construct it and use it so as not to injure those lands regardless of the question as to who has the older right or title; and if, through any fault or neglect of the owner of the ditch in not properly constructing, managing, and repairing the ditch, the water overflows or breaks through the banks, and destroys or damages the lands of others, either by washing away the crops or soil, or covering the land with sand or débris, the owner of the ditch is liable for such injury. However, the owners of the ditch or canal may not be held liable for what is known as an act of God, unless the acts of the owners are combined with it in such a manner as to render him liable."

In section 315 the author refers to the case of Chidester v. Consol. Ditch Co., 59 Cal. 203, where Mr. Justice Thornton, rendering the opinion of the court, said:

"No one is responsible for that which is merely the act of God or inevitable accident. But when human agency is combined with it, and neglect occurs in the employment of such agency, a liability for damages results from such neglect. Such is the rule laid down and applied in Polack v. Pioche, 35 Cal. 416, 95 Am. Dec. 115. 'The expression' (the expression referred to is that comprised in the words, 'act of God') 'excludes the idea of human agency, and, if it appears that a given loss has happened in any way through the intervention of man, it cannot be held to have been the act of God, but must be regarded as the act of man.' Polack v. Pioche, 35 Cal. 423, 95 Am. Dec. 115, per Sanderson, J., delivering the opinion of the court. See cases cited in the opinion; Wharton on Negligence, §§ 553, 559, and cases cited; Broom's Legal Maxims, 'Actus dei nemine facit injuriam,' pp. 227, 228. The learned author just referred to states the rule thus: 'The act of God signifies, in legal phraseology, any inevitable accident occurring without the intervention of man, and may, indeed, be considered to mean something in opposition to the act of man, as storms, tempests, and lightning. The above maxim may therefore be paraphrased and explained as follows: It would be unreasonable that those things which are inevitable by the act of God, which no industry can avoid, nor policy prevent, should be construed to the prejudice of any person in whom there has been no laches.' Broom's Legal Maxims, pp. 227, 228." See, also, Farnham on Waters and Water Rights, § 634.

The evidence shows conclusively that it was defendant's method of constructing the intakes that resulted in turning the flood of the Colorado river into Salton Sink. The floods of this river in 1905 and 1906 were great, but no greater than would have been anticipated by a prudent person in view of all the conditions and the history of that river. There is no evidence that the heavy rains in the summer of 1904

in the immediate vicinity of Salton Sink contributed in any degree to the flooding of the sink in March, 1905. There is no evidence that any water reached Salton Sink after November, 1904, and up to January, 1905, except the water diverted by the defendant from the Colorado river, a fact practically admitted by the witness Rockwood who testified on behalf of the defendant.

The decree of the Circuit Court is affirmed.

(172 Fed. 820.)

THE SALTON SEA CASES.†

NEW LIVERPOOL SALT CO. v. CALIFORNIA DEVELOPMENT CO. et al. (two cases).

(Circuit Court of Appeals, Ninth Circuit. August 2, 1909.)

Nos. 1,649, 1,659.

INJUNCTION (§ 223*) — ACTS CONSTITUTING VIOLATION—CONSTRUCTION OF DECREE.

Defendant by the negligent construction of the works by which it diverted water from the Colorado river into its irrigation canal caused an overflow through a breach in the bank, creating a lake in the Salton Basin, which covered and practically destroyed the value of complainant's property situated in the basin. In a suit by complainant it was awarded damages for the injury, and also an injunction restraining defendant from diverting water from the river in excess of the substantial needs of the people dependent on its canal, from permitting any waste water to flow on or over complainant's land, or into the lake in such amount as would "substantially increase the amount of water therein," or prevent the decrease thereof by natural causes. Defendant's canal was the only source of water supply for an arid valley some 30 miles long and containing 20,000 people, who were wholly dependent thereon for water for domestic purposes and the raising of crops. It appeared that in order to supply their needs, and especially to meet emergencies, as in case of hot winds to which the valley was subject, it was necessary to run through the canal, which was 61 miles long, a quantity of water somewhat in excess of the average consumption, and that the excess, when unused, was discharged through waste gates and flowed into the lake at a point some 40 miles from complainant's land, but not in such quantity as to materially affect its volume. *Held* that, giving the decree a proper and reasonable construction, such waste of water into the lake did not work substantial injury to complainant, and was not a violation of the injunction.

[Ed. Note.—For other cases, see Injunction, Cent. Dig. § 448; Dec. Dig. § 223.*]

Appeal from and Writ of Error to the Circuit Court of the United States for the Southern Division of the Southern District of California.

See, also, 97 C. C. A. 214, 172 Fed. 792.

Edward J. McCutchen and Purcell Rowe (Page, McCutchen & Knight, of counsel), for appellant and plaintiff in error.

John S. Chapman and E. A. Meserve (Eugene S. Ives, of counsel), for appellees and defendants in error.

Before GILBERT, ROSS, and MORROW, Circuit Judges.

† Rehearing denied October 4, 1909.

MORROW, Circuit Judge. In California Development Co. v. New Liverpool Salt Co. (just decided) 172 Fed. 792, 97 C. C. A. 214, the decree in favor of the complainant was entered on January 10, 1908. On March 27, 1908, the complainant presented to the court a petition by way of complaint for an attachment to issue forthwith for the arrest of Epes Randolph, H. T. Corey, and F. C. Herrmann, officers of the defendant having supervision and management of the business and operations of the defendant, including the diversion of water from the Colorado river. It was charged in the complaint that these officers had been guilty of contempt of court in disobeying and violating the decree and injunction therein contained, and the prayer of the complaint was that they should be punished accordingly.

The decree contained the following provisions:

"That defendant be perpetually enjoined and restrained from diverting from the Colorado river any of the waters thereof in excess of the substantial needs of the people dependent upon the canal described in complainant's bill of complaint for water supply for domestic and irrigation uses and purposes, and such other lawful purposes as the same may be applied to. * * *

"That the said water so diverted, whatever may be the amount, shall be so controlled and used that the same shall not flow upon the lands of the complainant described in the bill of complaint. * * *

"That the defendant be required to regulate the flow of any water that may be diverted by it so that there shall be no waste water flowing therefrom as the result of such diversion upon or over the lands of complainant, above described.

"That said defendant be restrained from turning out of its canals any waste water at any point whence the same will naturally flow upon or over the lands of complainant, or flow into the lake now covering the Salton Sink, and thereby substantially increase the amount of water therein, or maintain the amount of water therein, or prevent the decrease thereof by natural causes."

In the complaint filed with the court it was alleged that ever since the rendition and entry of said decree defendant, under the direction and management of said Randolph, Corey, and Herrmann, and by their orders and direction, had maintained at the head of its canal on the Colorado river a headgate through which the flow of water from the Colorado river into said canal was regulated and controlled; that said headgate was so built and devised that defendant could prevent any water from flowing into said canal, or could allow such quantities to flow therein as it might determine; that at all times since the 14th day of March, 1908, defendant, by the orders and direction of said Randolph, Corey, and Herrmann, had taken and diverted into said canal from the Colorado river a large volume of water, to wit, water in excess of 1,000 second feet, and had daily discharged and delivered from its canal at points east and north of Calexico, in the county of Imperial, state of California, into a certain water course or channel known as the Alamo Channel, leading from the places and points at which said water was so discharged into it to Salton Sink, a quantity of water not less at any time than 90 cubic feet per second, and as much at times as 252 cubic feet per second, all of which water so discharged into said channel or water course had naturally flowed over the lands of complainant and into Salton Sink, increasing the amount

of water therein, and preventing the decrease of water therein by natural causes.

It was further alleged that the water in Salton Sink at all times from January 28, 1908, to March 27, 1908, covered complainant's lands described in the final decree, to wit, sections 11, 15, and 23, and the N. E. ¼ of the N. W. ¼ of section 14, and the N. E. ¼ of the N. E. ¼ of section 14, all in township 8 S., range 10 E., San Bernardino meridian, situated in the county of Riverside, state of California. Upon the hearing of the order to show cause the court construed its decree, and upon the evidence submitted determined that the diversions complained of were not violations of the injunction, and the rule against the respondents was accordingly discharged. For the review of this judgment the complainant brings the case here by appeal and writ of error.

It appears from the testimony submitted to the court that during the years 1905 and 1906 there were a number of overflows of the Colorado river, and the time came when nearly the whole of the waters of the Colorado river were pouring through the Alamo Channel and into Salton Sink, and the result of the successive floods was that a lake was created in the Salton Basin about 40 miles in length from north to south and varied in its width, averaging about 10 miles in width; that the area of said lake as computed and estimated by the geological survey of the United States was about 460 square miles; that the depth of the lake at the deepest point was about 80 feet; that, in order to shut out the waters of the Colorado river and control the diversion of the same, it became necessary to expend a large amount of money, which it was estimated on information and belief amounted in the aggregate to $3,000,000; that this money was furnished by the Southern Pacific Railroad Company under an understanding and agreement with the California Development Company; that the work was completed by the Southern Pacific Company in February, 1907, and a concrete headgate constructed about nine miles below Yuma, whereby the waters were controlled in their diversion through defendant's canal. It appears, further, that the whole area of the Imperial Valley susceptible of cultivation and irrigation in valuable crops is at least 700,000 acres; that the 200,000 acres approximately now under cultivation extends over a considerable distance, being about 30 miles in length from north to south, and about 25 miles in width from east to west in the widest place. There are five towns in Imperial Valley, namely, Calexico, Brawley, Holtville, El Centro, and Imperial. The population of these towns is estimated to number about 3,000; and in Imperial Valley, including these towns and the settlers upon the lands, the population is estimated to be about 20,000. In all of these towns the houses are generally lighted with electricity furnished by the Holton Power Company, situated near the town of Holtville. Electricity is also used to some extent in the various towns for mechanical purposes, and it is estimated that perhaps the most important is the manufacture of ice which is necessary in the shipment of products out of the valley as well as for domestic use among the people. There is no source from which water can be obtained for these purposes or to supply the want of Imperial Valley for domestic and irrigation uses and purposes,

except the waters of the Colorado river furnished through the canals of the defendant. The value of the property in Imperial Valley dependent upon the defendant's canal system is estimated at $10,000,000.

It appears that the water diverted by the defendant from the Colorado river is carried by its canal and the channel of the Alamo river from the point of diversion for a distance of about 61 miles to a point known as Sharp's Heading, where the waste gate is situated, and where the delivery of water is made to the first of the six water companies engaged in receiving and distributing water in Imperial Valley for domestic and irrigation purposes and uses. From Sharp's Heading to the Holton power plant is about 11 miles, from the Holton power plant to the southeast end of Salton Lake is about 28 miles, while complainant's land is from 40 to 45 miles still further to the west and north beneath the waters of the other end of the lake.

The acts of the defendant which were made the subject of complaint to the court below were the turning of water into the channel of the Alamo river through the waste gate at Sharp's Heading and the laterals of the Imperial Water Companies, and at the tailrace of the Holton power plant, and the diversions of water from the Colorado river for the purpose of scouring and removing the silt from defendant's canal. The amount of water thus turned into the channel of the Alamo river and flowing on to the Salton Sea or Lake amounted, as estimated by the defendants, to approximately 150 second feet, but as claimed by the complainant 250 second feet. The use of water for scouring purposes appears to have been only occasional—two or three times a year during the season when there was but little if any irrigation—and the only diversion on that account after the final decree and prior to the entry of the judgment of the court in the contempt proceedings was 617 second feet turned out at Sharp's Heading on February 9, 1908. The showing made by the defendant was to the effect that, while there was more water diverted from the Colorado river than was actually consumed by the people in Imperial Valley for all the purposes named, nevertheless such a diversion was necessary in order to supply the substantial needs of the people dependent upon the canal system, and it was claimed that the entire waste did not substantially increase the amount of water in the Salton Sea or Lake, all of which it was contended was within the provisions of the decree. The explanation made by the evidence on behalf of the defendant for the diverting of more water from the river than was actually consumed in Imperial Valley was the long distance from the point of diversion to Imperial Valley, about 61 miles; the length of time required for the water to flow down to the point of distribution about 36 hours; and the loss in transmission from 15 to 30 per cent. according to the volume of water diverted ranging from 700 to 1,500 second feet. Further, the climatic conditions required that there should be sufficient water flowing in the canal to the points of distribution during the irrigation season to furnish an increased supply of water for emergencies when periods of excessive heat or hard dry winds suddenly absorb the moisture from the soil and destroy the crops unless there is an immediate flooding of the land. Sometimes there are heavy rainfalls within a period of a few hours, and within an equally short time a

dry wind may, and often does, sweep over the country making the immediate irrigation of the fields imperative to save the crops, especially is this the case of young crops of alfalfa, young trees, melons, beans, and all tender and shallow rooted plants. It also appeared that the waste from the tailgate of the Holton Power Plant was unavoidable, as is the occasional scouring of the canal to remove the silt to prevent the filling up of the canal and the destruction of the system. There was evidence that this waste water did not substantially increase the depth of water over complainant's land.

The complainant contends that the defendant can only carry on its business of supplying water to the inhabitants of Imperial Valley if it can do so without discharging any waste water upon the lands of the complainant; that is to say, into the Salton Sink. But if, on the other hand, it cannot carry on its business without discharging waste water into the Salton Sink so that such water with the accumulated water of the Sink flows upon complainant's lands, then defendant must cease to carry on its business of diverting water from the Colorado river. The complainant's construction of the decree amounts to this: That it provides:

"That the defendant be perpetually enjoined and restrained from diverting from the Colorado river any of the waters thereof if any such waters shall flow upon or over the lands of the complainant; that is to say, if any such waters shall flow into the Salton Sink covering the lands of the complainant."

But the court did not enter such a decree.

The decree provides that the diversion of water from the Colorado river shall not be "in excess of the substantial needs of the people dependent upon the canal," and that any waste water turned out of the defendant's canal shall not be such an amount as will "flow into the lake now covering the Salton Sink and thereby substantially increase the amount of water therein or maintain the amount of water therein, or prevent the decrease thereof by natural causes." These two provisions evidently relate to present conditions in the locality where the decree is to operate and while complainant's land is covered by the waters of the Salton Sink. But there are other conditions which appear to relate to the future when by seepage or evaporation the water shall disappear from complainant's land, and the land be no longer covered by the waters of the Salton Sink. The decree provides that the water diverted from the Colorado river "whatever may be the amount shall be so controlled and used that the same shall not flow upon the lands of the complainant." The decree also provides that:

"The defendant be required to regulate the flow of any water that may be diverted by it so that there shall be no waste water flowing therefrom as the result of such diversion upon or over the lands of the complainant."

And further:

"Defendant is restrained from turning out of its canals any waste water at any point whence the same will naturally flow upon or over the lands of complainant."

These last provisions clearly refer to the future time when the complainant's lands shall not be covered by the waters of Salton Sink, but

shall be lands over which waste water might flow. When that condition arrives, then the defendant must so control and regulate the flow of water in the canal that the same shall not flow upon complainant's land, and it must refrain from turning waste water out of its canal so that it shall flow upon complainant's land. It is the province of equity to deal with conditions as they may arise, and provide a remedy to fit the changing conditions of the case. In Pomeroy's Equity Jurisprudence, § 109, the author says:

"Equitable remedies, on the other hand, are distinguished by their flexibility, their unlimited variety, their adaptability to circumstances, and the natural rules which govern their use. There is, in fact, no limit to their variety and application. The court of equity has the power of devising its remedy and shaping it so as to fit the changing circumstances of every case and the complex relations of all the parties."

In section 111 the author says:

"Equity has followed the true principle of contriving its remedies, so that they shall correspond both to the primary right of the injured party, and to the wrong by which that right has been violated. It has, therefore, never placed any limits to the remedies which it can grant, either with respect to their substance, their form, or their extent; but has always preserved the elements of flexibility and expansiveness, so that new ones may be invented, or old ones modified, in order to meet the requirements of every case, and to satisfy the needs of a progressive social condition, in which new primary rights and duties are constantly arising and new kinds of wrongs are constantly committed."

This is plainly what the court did in this case. It considered the extraordinary conditions prevailing and the probable changing conditions that will prevail in this large territory, and had in view not only the present and future rights of the complainant, but the present and future rights also of a large number of people residing in that territory. It also had in view the fact that the court had in its final decree awarded full compensation for the destruction of its salt beds and works, its houses, and all other improvements which had been upon its land; the various items aggregating $456,746.23. The only injury not remedied by the award was that to the freehold or the tenure by which the land is held. From the fact that the salt beds and works had been destroyed and the land itself submerged to a depth of 75 or 80 feet, and no probability of a complete subsidence of the lake under 15 years, it is evident that the title to or ownership of the land was not considered worth very much, and not entitling the complainant to a decree of such a positive and sweeping character that it would practically result in destroying all other interests in Imperial Valley.

When it appeared, therefore, that from the evidence that under all the circumstances water in excess of the substantial needs of the people dependent upon the canal was not diverted from the Colorado river, and that the waste water now flowing into the Salton Sink did not substantially increase the amount of the water therein, it was properly determined, as we think, that the acts of the defendant did not come within the prohibition of the decree.

The judgment of the Circuit Court is therefore affirmed.

dry wind may, and often does, sweep over the country making the immediate irrigation of the fields imperative to save the crops, especially is this the case of young crops of alfalfa, young trees, melons, beans, and all tender and shallow rooted plants. It also appeared that the waste from the tailgate of the Holton Power Plant was unavoidable, as is the occasional scouring of the canal to remove the silt to prevent the filling up of the canal and the destruction of the system There was evidence that this waste water did not substantially increas the depth of water over complainant's land.

The complainant contends that the defendant can only carry on it business of supplying water to the inhabitants of Imperial Valley i it can do so without discharging any waste water upon the lands o the complainant; that is to say, into the Salton Sink. But if, on th other hand, it cannot carry on its business without discharging was water into the Salton Sink so that such water with the accumulat water of the Sink flows upon complainant's lands, then defendant mu cease to carry on its business of diverting water from the Colora river. The complainant's construction of the decree amounts to thi That it provides:

"That the defendant be perpetually enjoined and restrained from div ing from the Colorado river any of the waters thereof if any such wat shall flow upon or over the lands of the complainant; that is to say, if a such waters shall flow into the Salton Sink covering the lands of the co plainant."

But the court did not enter such a decree.

The decree provides that the diversion of water from the Color river shall not be "in excess of the substantial needs of the people pendent upon the canal," and that any waste water turned out of defendant's canal shall not be such an amount as will "flow into lake now covering the Salton Sink and thereby substantially incr the amount of water therein or maintain the amount of water ther or prevent the decrease thereof by natural causes." These two pr sions evidently relate to present conditions in the locality where decree is to operate and while complainant's land is covered by the ters of the Salton Sink. But there are other conditions which ap to relate to the future when by seepage or evaporation the water disappear from complainant's land, and the land be no longer cov by the waters of the Salton Sink. The decree provides that the w diverted from the Colorado river "whatever may be the amount be so controlled and used that the same shall not flow upon the l of the complainant." The decree also provides that:

"The defendant be required to regulate the flow of any water that m diverted by it so that there shall be no waste water flowing therefro the result of such diversion upon or over the lands of the complainant.

And further:

"Defendant is restrained from turning out of its canals any waste at any point whence the same will naturally flow upon or over the la complainant."

These last [illegible] future time when the plaintiff's [illegible] waters of Salton Sin.

(172 Fed. 826.)

CAPEWELL HORSE NAIL CO. v. MOONEY.

(Circuit Court of Appeals, Second Circuit. August 20, 1909.)

No. 289.

1. TRADE-MARKS AND TRADE-NAMES (§ 84*)—REGISTRATION OF MARK—COMMON-LAW TRADE-MARK.

In a suit for infringement of a trade-mark, objection to the validity of complainant's registration of the mark was not material where complainant had a common-law trade-mark in the device alleged to have been infringed.

[Ed. Note.—For other cases, see Trade-Marks and Trade-Names, Dec. Dig. § 84.*]

2. TRADE-MARKS AND TRADE-NAMES (§ 71*)—INFRINGEMENT—UNFAIR COMPETITION.

The use of complainant's trade-mark on horseshoe nails to simulate complainant's nails, and produce confusion in the minds of dealers and users, was unfair competition.

[Ed. Note.—For other cases, see Trade-Marks and Trade-Names, Cent. Dig. § 82; Dec. Dig. § 71.*

Unfair competition, see notes to Scheuer v. Muller, 20 C. C. A. 165; Lare v. Harper & Bros., 30 C. C. A. 376.]

3. COURTS (§ 292*)—JURISDICTION—INFRINGEMENT OF TRADE-MARK.

A bill may be maintained in the federal Circuit Court to restrain the infringement of a common-law trade-mark where other jurisdictional facts are present.

[Ed. Note.—For other cases, see Courts, Cent. Dig. § 834; Dec. Dig. § 292.*]

4. TRADE-MARKS AND TRADE-NAMES (§ 19*)—CHARACTER OF MARKS—ORNAMENTATION.

That a trade-mark, consisting of a check figure formed by intersecting lines impressed on the bevel face beneath the edge of horseshoe nails, was an ornamental device which added to the appearance of the nails, and also came to represent quality, did not prevent it from operating as a valid trade-mark.

[Ed. Note.—For other cases, see Trade-Marks and Trade-Names, Cent. Dig. § 22; Dec. Dig. § 19.*]

5. TRADE-MARKS AND TRADE-NAMES (§ 84*) — INFRINGEMENT — NECESSITY — HORSE NAILS.

It was no defense to a suit to restrain the infringement of plaintiff's trade-mark consisting of a check figure formed of intersecting lines impressed on the bevel face beneath the heads of horseshoe nails that such mark was produced while the nail was passing through one of the rolls of the manufacturing machinery by which the nail was gripped and held in place; it not appearing that the pattern of the gripping surface of the roll was required to be the same as the trade-mark stamped on complainant's nails in order to their successful manufacture.

[Ed. Note.—For other cases, see Trade-Marks and Trade-Names, Dec. Dig. § 84.*]

Appeal from the Circuit Court of the United States for the Northern District of New York.

Suit by the Capewell Horse Nail Company against Walworth M. Mooney. From a decree (167 Fed. 575) for complainant, defendant appeals. Affirmed.

This cause comes here upon appeal from a decree of the Circuit Court, Northern District of New York, enjoining defendant from making, using, or

selling or offering for sale horse nails bearing the trade-mark of complainant such as have been heretofore made and sold by defendant or bearing any mark so similar to complainant's trade-mark as to be likely to deceive purchasers and the public.

The opinion of the Circuit Court is reported in 167 Fed. 575.

Robert W. Hardie, for appellant.

Edmund Wetmore and Oscar W. Jeffery, for appellee.

Before LACOMBE, COXE, and NOYES, Circuit Judges.

LACOMBE, Circuit Judge. The mark consists of a pattern of small checks, formed by lines crossing each other diagonally, stamped upon the under or bevelled side or front face of the head of the horseshoe nails and substantially covering the surface of that particular face. It is not a rhomboid, but has four sides, the upper and lower sides being parallel but unequal, the upper being the longest. The right and left sides are of equal length, but not parallel. Within these boundaries are the check marks. No complaint is made of the marking or dressing up of the packages in which defendant's nails are sold by him, but it is in evidence that such packages are frequently broken up and the contents sold to users by the pound, and that users are accustomed to look to markings on the nail itself as identifying the maker. Various marks have been placed on the front face of nail heads by different makers—initials, etc.—and in the case of one maker a globe with intersecting meridian lines (readily distinguishable from complainant's mark). There is also some evidence, not especially persuasive, that check marks had been used on the top of the head as the distinguishing mark of another maker. But the record does not show that this particular mark on the front face was in use before its adoption by complainant and its association in the public mind with horse nails made by it.

Complainant registered this trade-mark, No. 56,605, dated October 6, 1906, and the bill charges infringement of such registration. Several objections to the validity of this registration are urged by defendant, but it is not necessary to discuss that branch of the case, since the court found that complainant had a common-law trade-mark, and that defendant had placed the mark on the front face of his nail heads "for the purpose of simulating complainant's nails and producing confusion in the minds of dealers and users and selling his nails as those of complainant's make." Such acts constitute unfair competition in trade. It is idle to contend that the Circuit Court had no jurisdiction to pass upon the question of common-law trade-mark. There is the requisite diversity of citizenship, and the averment in the complaint as to the statutory amount in dispute is not denied in the answer, nor was any such objection interposed by plea.

The opinion of Judge Ray is most exhaustive and no useful purpose would be served by a rediscussion of the facts. He found that:

"This well-defined check mark was first appropriated and adopted by the complainant as a trade-mark and as its trade-mark, and that it was so adopted and appropriated and thereafter used primarily for the purpose of identifying and distinguishing horse nails of complainant's manufacture from those of all other makers and not as an incident of manufacture or primarily for ornamentation."

Also that:

"The fact of such adoption and appropriation was extensively and sufficiently made known to the public by actual and continued use by complainant as such, same being affixed to its nails, and also by publications and otherwise; that by such use thereof on the goods of complainant's manufacture such check mark came to be generally known to the public as complainant's trade-mark and its goods bearing such mark on the nail came to be publicly known and distinguished as those of complainant's make."

The evidence tends to establish the affirmative of the first of these findings, but the second of them is the more important one and the record fully sustains it. The improved appearance of the nail was immediately taken up as a feature for advertising, and was so advertised as the distinctive characteristic of nails made by the Capewell Company. In Capewell Horse Nail Co. v. Putnam Nail Co. (C. C.) 140 Fed. 670, a suit to restrain infringement of this same mark, Judge Colt held that complainant had not proved that it had ever claimed the check as a trade-mark nor that there was any association in the public mind of the check pattern with complainant's nails. Except for a circular issued in 1897 calling attention to the check mark as indicating Capewell nails (which is in the record here), we do not know what was in evidence before Judge Colt, but it must be presumed that the proof before us as to the distribution of nearly 100,000 of these circulars among blacksmiths and hardware merchants, as to the statements of salesmen to customers, and as to the recognition of complainant's nails by this mark was lacking in that case. As to the arguments advanced by defendant that check marks have been used on other articles as ornaments or for purposes of utility, that the mark is ornamental and that such circumstance led to its adoption, that it is indefinite and that complainant uses a different mark on its packages from the one applied to its nails, Judge Ray's opinion sufficiently sets forth the law, and we find no error in his conclusions.

The real point in the case is whether the mark which defendant stamps on its nails, a Chinese copy of complainant's, is put there as a necessary incident of the process of manufacture. Checks or knurling of similar pattern had long been in use to form gripping surfaces, as in forceps, tweezers, vises, etc., where they are cut on the interior surfaces of the jaws of the gripping devices. They had also been used on the handles of various tools to prevent the slipping of the hand of the workman when grasping the tools. Conceding that the general public has the right to use this check mark to form a gripping surface when necessary, the Circuit Court states the proposition as follows:

"Whether the defendant used the check mark in manufacturing horseshoe nails, as a gripping surface or for the purpose of imitating the complainant's mark and manufacture so as to pass off his nails as those of complainant."

The mark on the face of the nail head is produced by a check mark on one of the rolls between which defendant's nails are passed, and he contends that without its use as a gripping surface the nail will frequently slip and a large percentage of imperfect nails will be found in the output.

The record contains a large amount of evidence on this branch of the case, and here, as in the Circuit Court, the proposition above stated

has been argued at great length and with great ability. The most we can say is that the proof leaves it doubtful whether or not the defendant could economically and efficiently manufacture its nails without a gripping surface on its small roller which would impress permanent marks on the front face of the nail head.

On this branch of the case, defendant, who cannot reasonably dispute that his mark there placed is substantially like complainant's, has the burden of proof. But we concur with Judge Ray in the conclusions that:

"If it was necessary to have a gripping surface on the roller, it was not necessary to use the only one of many which would produce [on the face of the nail head] the exact counterpart of complainant's distinguishing mark, which had come to be known in the trade and among manufacturers and dealers in and users of horseshoe nails; [and that] the production of this check mark on the defendant's nails is not a necessary incident of manufacture."

The decree is affirmed, with costs.

(172 Fed. 829.)

SUNSET TELEPHONE & TELEGRAPH CO. v. CITY OF POMONA et al.†

(Circuit Court of Appeals, Ninth Circuit. August 7, 1909.)

No. 1,678.

1. TELEGRAPHS AND TELEPHONES (§ 10*) — RIGHTS IN USE OF STREETS — CONSTRUCTION OF STATUTE.

Where a telephone company is authorized by its charter to do an interstate business, and uses its lines for that purpose, a right to build and maintain such lines in the streets of a city for that purpose, conferred by statute, is not limited nor affected by the fact that they are also used to transact local or intrastate business.

[Ed. Note.—For other cases, see Telegraphs and Telephones, Cent. Dig. § 6; Dec. Dig. § 10.*

Rights of telegraph or telephone companies to use of streets, see note to Southern Bell Telephone & Telegraph Co. v. City of Richmond, 44 C. C. A. 155.]

2. COURTS (§ 366*) — FEDERAL COURTS — AUTHORITY OF DECISIONS OF STATE COURTS.

In determining whether a complainant has acquired contract rights under a state statute, which are protected from impairment by the federal Constitution, a federal court will follow the construction placed upon such statute by the highest court of the state, where it is in favor of the contract relied on.

[Ed. Note.—For other cases, see Courts, Cent. Dig. § 957; Dec. Dig. § 366.*

Conclusiveness of judgment between federal and state courts, see notes to Kansas City, Ft. S. & M. R. Co. v. Morgan, 21 C. C. A. 478; Union & Planters' Bank v. City of Memphis, 49 C. C. A. 468.]

3. COURTS (§ 366*) — FEDERAL COURTS — AUTHORITY OF DECISION OF STATE COURTS—"TELEGRAPH."

The Supreme Court of California, in construing section 591 of the Penal Code, which makes it a penal offense for any person to maliciously take down or injure any line of telegraph, held that the word "telegraph," as used in such section, included in its meaning "telephone." Pol. Code Cal. § 4480, provides that with relation to each other the provisions of the four Codes are to be construed as though parts of the same statute. *Held*

† Rehearing denied November 1, 1909.

that, under such rule and decision, Civ. Code Cal. § 536, which provides that "telegraph corporations may construct lines of telegraph along and upon any public road or highway * * * within this state," must be construed by a federal court as including telephone corporations, and as authorizing them to construct and maintain their lines in the streets of cities and towns without first procuring the consent of the municipal authorities.

[Ed. Note.—For other cases, see Courts, Cent. Dig. § 957; Dec. Dig. § 366.*

For other definitions, see Words and Phrases, vol. 8, pp. 6895–6897.]

4. CONSTITUTIONAL LAW (§ 134*) — OBLIGATION OF CONTRACTS — CONTRACTS OF STATES PROTECTED.

The construction and maintenance by a telephone company of its lines in the streets of a city under authority conferred by a state statute is an acceptance by it of the provisions of such statute, and creates a contract between it and the state, which is protected from impairment by the federal Constitution.

[Ed. Note.—For other cases, see Constitutional Law, Cent. Dig. § 344; Dec. Dig. § 134.*]

5. COURTS (§ 366*) — FEDERAL COURTS — AUTHORITY OF DECISIONS OF STATE COURTS.

A federal court will not adjudge a state statute invalid, as in violation of the state Constitution, where its validity has been expressly recognized by the highest court of the state.

[Ed. Note.—For other cases, see Courts, Cent. Dig. § 957; Dec. Dig. § 366.*]

Gilbert, Circuit Judge, dissenting.

Appeal from the Circuit Court of the United States for the Southern Division of the Southern District of California.

For opinion below, see 164 Fed. 561.

Lawler, Allen, Van Dyke & Jutten and Pillsbury, Madison & Sutro, for appellant.

Robert G. Loucks, for appellees.

Beverly L. Hodghead and J. P. Wood, amici curæ.

Before GILBERT, ROSS, and MORROW, Circuit Judges.

ROSS, Circuit Judge. The question presented on this appeal is whether the appellant, a California corporation, has the right to maintain its telephone poles and wires in the streets of Pomona, which is a city within the state, of the fifth class, without obtaining from the city a franchise therefor. No question is presented by the record respecting the right of the city to make a charge against the company for the use of those portions of the streets actually occupied by it. A controversy between the company and the city and its officers over the question stated having arisen, and the city authorities having commenced to cut down the poles of the company, the suit was commenced by it to secure injunctive relief, resulting, on the final hearing, in a decree dismissing the appellant's bill of complaint, from which decree the present appeal comes.

While, in the court below, the complainant's alleged rights were in part based upon the act of Congress of July 24, 1866, entitled "An act to aid in the construction of telegraph lines and to secure to the gov-

ernment the use of the same for postal, military and other purposes" (chapter 230, 14 Stat. 221), which act entered into the consideration of the court below and is much discussed on the present appeal by counsel for the appellees, no right growing out of that act is here asserted on the part of the appellant, and hence we omit all reference to it.

The appellant here bases its alleged rights upon certain provisions of the statutes of the state of California, and upon a claimed contract between it and the city, arising out of (1) the construction, maintenance, and operation of its plant in Pomona since August 8, 1898, and, more particularly, the maintenance, operation, and additional construction of its telephone system between the years 1898 and 1902, by and with the acquiescence and consent and under the direction of the city, at a cost of more than $10,000; (2) the change and removal, in the year 1904, by the appellant, of its poles and wires from Second street, at the request of the city, and their reconstruction on others of its streets, with its approval and under its direction, at a cost to the appellant of more than $6,716.48; (3) the extension of the appellant's telephone system by the alleged permission of the city, under a resolution thereof of date October 23, 1903, at a cost of about $1,500; and (4) the assessment and taxation by the city to the appellant of a franchise for several years preceding the commencement of this suit, including the years 1904–05 and 1905–06, and the acceptance and use by the city of two free telephones from the appellant for more than three years prior to and after the commencement of the suit.

The appellant was incorporated in April, 1889, for the purpose of doing a general telephone and telegraph business in the states of California, Oregon, and Nevada, and the then territories of Washington, Utah, and Arizona, and elsewhere. Prior to its incorporation, to wit, on the 8th day of August, 1888, the city of Pomona passed an ordinance, numbered 30, granting to another and distinct corporation, called the Sunset Telephone-Telegraph Company, a franchise to erect telephone poles and wires along the public streets of the city for a period of 10 years, and in the month of May of the following year that company transferred to the appellant all of its property, including whatever rights it acquired under that ordinance. Since the month of May, 1889, the appellant has carried on a general telephone business throughout the state of California, including the city of Pomona, and in many parts of Oregon, Washington, and Nevada; its lines of poles and wires in Pomona being an integral part of its system, and its subscribers and all other persons using its system in any place in the states or territories mentioned, holding conversations from time to time by telephone with other subscribers and persons in other cities and places reached by the said system. On the 8th day of August, 1898, the term of the franchise granted by the aforesaid ordinance numbered 30 to the appellant's aforesaid assignor expired by limitation, notwithstanding which the appellant, according to the record, continued to construct, maintain, and operate its telephone system in Pomona without question on the part of the city as to its right to use the public streets and highways therein for its poles and wires, until

February 2, 1899, when the board of trustees of the city for the first time notified the appellant that it had "no franchise, privilege, or other legal right in the city." The record shows subsequent extensions and changes of the appellant's poles and wires in the city, made with the consent, and in some instances at the suggestion, of the city; but the contentions of the respective parties were such, from and after February 2, 1899, that no consent on the part of the city to the permanent maintenance of the appellant's poles and wires in the streets of the city without the procurement of a franchise from it can be properly affirmed of the matters occurring subsequent to that date. At no time, so far as the record shows, has the appellant disputed the exercise by the city of its police power in the matter of designating and indicating the places where, in the streets and highways of the city, appellant's poles should be set and its wires strung, and until some time in the year 1903 the city had always, through its proper officers, made such designation. In the latter year, upon the making of applications by the appellant for permission to set new poles and to make extensions so as to accommodate its new subscribers, the city refused to grant such applications, upon the ground that the appellant should secure a franchise from it.

In effect, the court below treated the appellant's telephone system as if it constituted two separate and distinct systems—one interstate and the other intrastate. In our opinion there is no valid ground for such a view. The appellant's poles and wires were erected under and by virtue of a charter which empowered it to transact an interstate telephone business. That such companies, like telegraph companies, are important agencies in the transaction of interstate commerce, is well settled. Muskogee Nat. Tel. Co. v. Hall, 118 Fed. 382, 55 C. C. A. 208; Southern Bell Telephone & Telegraph Co. v. Richmond (C. C.) 78 Fed. 858, and cases there cited. Each pole and wire erected formed an integral part of that system, just as each rail and tie of an interstate railroad constitutes an integral part of its system; and if there be any statute conferring upon the appellant as an interstate telephone company the right to construct and maintain its poles and wires in the streets of the city of Pomona (subject, of course, to the proper exercise of the police power of the city), we do not understand that any of them can be legally cut down or destroyed by municipal authority. The main question in the case, therefore, is, we think, whether there was any statutory authority for the erection and maintenance in the streets of Pomona of the appellant's poles and wires. As has already been said, the right of the city to impose a charge upon the company for the use of such portions of the city as it actually uses is not here involved.

Municipalities are the creatures of state Legislatures, and are, of course, subject to state legislation. By its Constitution of 1879 California undertook, in respect to certain privileges in the streets of the cities and towns of the state, to control even the power of the Legislature of the state, and by section 19 of article 11 of that instrument made a direct grant to the persons therein designated of the right to lay pipes in the streets of any city or town within the state, for the

purpose of supplying such cities and towns and their inhabitants with water and light, such work to be done under the direction of the superintendent of streets, and under such general regulations as the municipality should prescribe for "damages and indemnity for damages," and with the right on the part of the municipality to regulate the charges therefor. See People v. Stephens, 62 Cal. 209. In the subsequent case of In re Johnston, 137 Cal. 115, 120, 69 Pac. 973, the Supreme Court of California said:

"When the sovereign authority of the state, either in its Constitution or through its Legislature, has created a right and expressed and defined the conditions under which it may be enjoyed, it is not within the province of a municipality, where such right is sought to be exercised or enjoyed, to impose additional burdens or terms as a condition to its exercise. The Constitution does not authorize the municipality to require a permit as a condition upon which the pipes may be laid in its streets, and its claim of a right to require a permit includes the right to refuse one, and the right to annex one condition to the exercise of the privilege implies the right to annex others, which may at least impair, if not in fact amount to a denial of, its exercise. The provision that the work is to be done under the direction of the superintendent of streets gives all the protection for the use of the streets that could be obtained under a permit; and, under the provision authorizing the municipality to prescribe regulations for damages and indemnity for damages, the city will be fully protected against any pecuniary loss or detriment."

And the Supreme Court of California then proceeded to refer with approval to the case of Township of Summit v. New York, etc., Tel. Co., 57 N. J. Eq. 123, 41 Atl. 146, saying:

"Under the statutes of New Jersey any telephone company was authorized to use the public roads and highways on the line of its route for the purpose of erecting poles thereon to suspend its wires and other fixtures, upon first obtaining the consent of the owner of the soil, with the proviso that the use of the public streets in any incorporated cities and towns of the state should be subject to such regulations and restrictions as might be imposed by the corporate authorities of said cities and towns. The authorities of the township of Summit passed an ordinance that no wire should be stretched across any public street without the permission of the township committee. In an action to restrain a telephone company from stretching its wires across certain streets of the township, the court held that this ordinance was not a 'regulation or restriction' under the statute, and was therefore invalid, saying: 'A right to prevent the use of the streets for suspending wires, unless previous consent is obtained, if such a right be lawfully conferred, authorizes a refusal to consent at discretion, and confers a virtual power of prohibition. The right to the use of the streets has been expressly granted by the Legislature, and the power to prohibit or interdict this use so granted cannot be inferred from the declaration, in the proviso annexed to the grant, that the use should be subject to such regulations and restrictions as may be imposed. The restrictions intended in such a proviso must be held to be restrictions in the nature of regulations, and not restrictions which shall prohibit the use or impose new conditions to the power to exercise the franchise.' "

The Codes of California took effect January 1, 1873. Section 286 of the Civil Code contained the provision that:

"Private corporations may be formed for any purpose for which individuals may lawfully associate themselves."

At that time there was no specific provision in respect to telephone companies; but section 536 of the same Code provided as follows:

"Telegraph corporations may construct lines of telegraph along and upon any public road or highway, along or across any of the waters or lands within

this state, and may erect poles, posts, piers or abutments for supporting the insulators, wires and other necessary fixtures of their lines in such manner and at such points as not to incommode the public use of the road or highway, or interrupt the navigation of the waters."

Section 591 of the Penal Code provided that:

"Every person who maliciously takes down, removes, injures or obstructs any line of telegraph or any part thereof, or appurtenances or apparatus connected therewith, or severs any wire thereof, is guilty of a misdemeanor."

Subsequently, and while the above provisions of the California statutes stood as quoted, the case of Davis v. Pacific Telephone & Telegraph, etc., Company, 127 Cal. 312, 57 Pac. 764, 59 Pac. 698, came before the Supreme Court of the state, in which it became necessary for the court to determine whether the word "telegraph," used in section 591 of the Penal Code, also included in its meaning "telephone." In holding that it did, the Supreme Court, in our opinion, in effect held that the same word "telegraph" in section 536 of the Civil Code of California also included within its meaning "telephone," since by section 4480 of the Political Code of the state the Legislature declared that:

"With relation to each other the provisions of the four Codes must be construed (except as in the next two sections provided [which two sections do not bear upon the present question]) as though all such Codes had been passed at the same moment of time, and were parts of the same statute."

And it has been, in effect, so decided by the Supreme Court of California in several cases. People v. Applegarth, 64 Cal. 229, 30 Pac. 805; People v. Dobbins, 73 Cal. 257, 14 Pac. 860; Bruner v. Superior Court, 92 Cal. 239, 28 Pac. 341. In the latter case the court held that the word "elisor," as used in the Code of Civil Procedure, must be deemed to have been used with reference to its definition given in the Political Code—saying that by section 4480 of the Political Code it is provided that:

"With relation to each other the provisions of the four Codes must be construed (except as in the next two sections provided), as though all such Codes had been passed at the same moment of time, and were parts of the same statutes. (The next two sections refer to cases of conflict, and have no application here.) When, therefore, 'elisor' is used in one Code, it must be taken to have been used with reference to its definition given in another Code."

In its opinion the court below held that the case of Davis v. Pacific Telephone & Telegraph Company, supra—

"is not controlling authority in the federal courts for at least four reasons: First. The word 'telegraph' is so often employed throughout the country in legislative enactments and judicial decisions that its definition would seem to be a matter of general, rather than local, law. Second. The Davis Case does not establish a rule of property, but only determines a question of criminal liability. Third. Said case is not a construction of section 536 of the California Code, but simply a definition of the word 'telegraph' in section 591 of the Penal Code of the state. In that case, the court, after giving to the word 'telegraph' a wider scope than consistent with its etymology, says: 'But is this construction justifiable in the case of the penal statute: Section 4 of our Penal Code provides that "the rule of the common law that penal statutes are to be strictly construed has no application to this Code. All its provisions are to be construed according to the fair import of their terms, with a view to effect its object and to promote justice." In contemplation of this action, in recognition of the fact that a substantial identity exists between the two

words, we think no hesitation need be expressed in declaring that under section 591 of the Penal Code a criminal prosecution will lie for the illegal destruction of a telephone wire.' Thus it appears that the conclusion of the court was reached only by disregarding the common-law rule of strict construction, which section 4 of the Penal Code requires to be done; whereas section 536 of the Civil Code, being a grant from the state, upon its acceptance by the corporation, should be strictly construed. The Davis Case, therefore, is not a construction of section 536; on the contrary, the inference is a fair one, from the very language of the court, that if it had been passing upon said section under a strict rule of construction a more limited meaning would have been given to the word 'telegraph,' and telephone companies would have been excluded from the operation of the section."

It is undoubtedly true that the federal courts are not bound by the decisions of the state courts upon questions of "general law." We are, however, unable to agree with the learned judge of the court below in his holding that the construction placed by the Supreme Court of California upon the word "telegraph" in the sections of the state statute referred to, the effect of which was and necessarily is to affect property rights situated within the state, falls within any proper meaning of the term "general law" as above used. That the appellant, in erecting its poles and wires in the streets of the city of Pomona, relied for its authority, at least in part, upon section 536 of the Civil Code of California, is not only shown by the proof on the part of the appellant, but also appears from the affidavit of the city attorney of Pomona filed on behalf of the city, in which that affiant says, among other things:

"That William E. Dunn, of Los Angeles, one of the attorneys of said complainant company, has several times appeared before the board of trustees of said city in behalf of said complainant company; that he has also called at my office and consulted with me in reference to the matter; that at the beginning of our endeavor to place Sunset on an equal basis with other citizens and corporations said William E. Dunn relied principally upon section 536 of the Civil Code of the state of California as the source of authority for his said company; and that said section 536 gave his said company rights and privileges to operate within said city of Pomona independent of, separate from, and without regard to the rights or wishes of said city of Pomona or its board of trustees."

That a construction of a state statute by the highest court of the state, which establishes a rule of property within the state, will be adopted by the federal courts, is well-established law. In such cases even the Supreme Court of the United States will change its own ruling to conform to the decision of the highest court of a state. In Green v. Lessees of Henry Neal, 6 Pet. 289, 297, 8 L. Ed. 402, the Supreme Court said:

"It is admitted in the argument that this court, in giving a construction to a local law, will be influenced by the decisions of the local tribunals; but it is contended that, when such a construction shall be given in conformity to those decisions, it must be considered final—that, if the state shall change the rule, it does not comport either with the consistency or dignity of this tribunal to adopt the change. Such a course, it is insisted, would recognize in the state courts a power to revise the decisions of this court, and fix the rule of property differently from its solemn adjudications; that the federal court, when sitting within a state, is the court of that state, being so constituted by the Constitution and laws of the Union, and as such has an equal right with the state courts to fix the construction of the local law. On all questions arising under

the Constitution and laws of the Union, this court may exercise a revising power; and its decisions are final and obligatory on all other judicial tribunals, state as well as federal. A state tribunal has a right to examine any such questions, and to determine them; but its decision must conform to that of the Supreme Court, or the corrective power may be exercised. But the case is very different where a question arises under a local law. The decision of this question, by the highest judicial tribunal of a state, should be considered as final by this court; not because the state tribunal, in such a case, has any power to bind this court, but because, in the language of the court, in the case of Shelby v. Guy, 11 Wheat. 361, 6 L. Ed. 495, 'a fixed and received construction by a state in its own courts makes a part of the statute law.' The same reason which influences this court to adopt the construction given to the local law, in the first instance, is not less strong in favor of following it, in the second, if the state tribunals should change the construction."

Nor is it accurate to say, as did the court below in its opinion, that, because a federal question is involved in this case, the construction of the state statute by the highest court of California was not binding upon the federal court, which was therefore at liberty to exercise its own independent judgment in respect to the meaning of the state statute. The rule is that the federal courts will not depart from, but, on the contrary, will follow, the construction of a state statute by the highest court of the state, when such construction is in favor of the contract relied on, and not against it. That rule is thus stated by the Supreme Court of the United States in the recent case of Powers v. Detroit & Grand Haven Railway Company, 201 U. S. 543, 556, 26 Sup. Ct. 556, 557, 50 L. Ed. 860, where it is said:

"It has been often decided by this court, so often that a citation of authorities is unnecessary, that the Legislature of a state may, in the absence of special restrictions in its Constitution, make a valid contract with a corporation in respect to taxation, and that such contract can be enforced against the state at the instance of the corporation. It is said that we are not concluded by a decision of the Supreme Court of a state in reference to the matter of contract; that, while the rule is to accept the construction placed by that court upon its statutes, an exception is made in case of contracts; and that we exercise an independent judgment upon the question whether a contract was made, what its scope and terms are, and also whether there has been any law passed impairing its obligation. Douglas v. Kentucky, 168 U. S. 488, 18 Sup. Ct. 199, 42 L. Ed. 533. It is in order to uphold the provision of the federal Constitution that no state shall pass a law impairing the obligation of a contract that this duty of independent judgment is cast upon this court. But here the Supreme Court of the state has ruled in favor of the continued existence of a corporation and the applicability of certain statutes, and when upon the face of such statutes a valid contract appears we accept the ruling that the statutes are valid and applicable enactments. In other words, the Supreme Court of the state having sustained the validity of a statute from which a contract is claimed, this court follows that decision, and starts with the question: What contract is shown by statute?"

See, also, Minnesota Iron Company v. Kline, 199 U. S. 593, 26 Sup. Ct. 159, 50 L. Ed. 322; Armour Packing Company v. Lacy, 200 U. S. 226, 26 Sup. Ct. 232, 50 L. Ed. 451; N. Y. Cent. R. R. Co. v. Miller, 202 U. S. 584, 595, 26 Sup. Ct. 714, 50 L. Ed. 1155; Jefferson Branch Bank v. Skelly, 66 U. S. 436, 443, 17 L. Ed. 173, in which last case, in answer to an insistent and persistent claim that it was bound by the construction placed by the Supreme Court of Ohio upon statutory and constitutional provisions of that state, the Supreme Court of the United States said:

"We answer to this, as this court has repeatedly said, whenever occasion has been presented for its expression, that its rule of interpretation has invariably been that the constructions given by the courts of the states to state legislation and to state Constitutions have been conclusive upon this court, with a single exception, and that is when it has been called upon to interpret the contracts of states, 'though they have been made in the forms of law,' or by the instrumentality of a state's authorized functionaries, in conformity with state legislation. It has never been denied, nor is it now, that the Supreme Court of the United States has an appellate power to revise the judgment of the Supreme Court of a state, whenever such a court shall adjudge that not to be a contract which has been alleged, in the forms of legal proceedings, by a litigant, to be one, within the meaning of that clause of the Constitution of the United States which inhibits the states from passing any law impairing the obligation of contracts."

Taking section 536 of the Civil Code of California as originally enacted as including telephone as well as telegraph companies, as we think must be done in view of the decisions of the Supreme Court of the state to which reference has been made, it cannot be doubted that the erection by the appellant of its poles and wires in Pomona in the year 1889, and their maintenance and operation, was an acceptance by it of the provisions of that statute, which thereby became a contract between the company and the state, secured by the Constitution of the United States against impairment by any subsequent state legislation. Specific reference need not, therefore, be made to the franchise acts of the state, the first of which was passed in 1893 (St. Cal. 1893, p. 288, c. 204), further than to say that by those of March 11, 1901 (St. Cal. 1901, p. 265, c. 103), and March 20, 1905 (St. Cal. 1905, pp. 491, 492, c. 385), both telegraph and telephone lines doing an interstate business are expressly excepted from their provisions requiring a franchise from a municipality.

We have not overlooked the contention on the part of the appellees that section 536 of the Civil Code of California violates certain provisions of the state Constitution, and is, therefore, void. In considering such a question Mr. Justice Harlan, while sitting in the Circuit Court in the case of Smith v. Fond du Lac, 8 Fed. 289, said:

"I have not forgotten what was said by the Supreme Court of the United States, when required in Fletcher v. Peck, 6 Cranch, 128, 3 L. Ed. 162, to determine whether the Legislature of Georgia had in a particular enactment violated the Constitution of that state. The court there said, speaking by Chief Justice Marshall, that 'the question whether a law be void for its repugnancy to the Constitution is at all times a question of much delicacy, which ought seldom, if ever, be decided in the affirmative in a doubtful case.' The more recent decisions of the same court justify me, I think, in saying that a federal court, in determining the rights of parties under a state law, will never, in a doubtful case, adjudge such law to be in conflict with the state Constitution, unless sustained in so doing by some distinct adjudication of the highest court of the state."

Certainly, in view of the decision of the Supreme Court of California in the Davis Case, and especially the more recent decision of the same court in Western Union Telegraph Co. v. Visalia, 149 Cal. 744, 87 Pac. 1023, where the court expressly recognized the validity of that section by holding that the Western Union Telegraph Company had the right to have its telegraph lines in the streets of the city of Visalia not only by the act of Congress of July 24, 1866, "but also from section 536 of our Civil Code," no federal court would be justi-

fied in holding that that section violates any provision of the Constitution of California.

The conclusion to which we have come is, we think, sustained by the cases of Abbott et al. v. City of Duluth (C. C.) 104 Fed. 833; City of Duluth v. Abbott et al., 117 Fed. 137, 55 C. C. A. 153; City of Wichita v. Old Colony Trust Co., 132 Fed. 641, 66 C. C. A. 19; Northwestern Exchange Telephone Co. v. City of Minneapolis, 81 Minn. 140, 83 N. W. 527, 86 N. W. 69, 53 L. R. A. 175; City of Duluth v. Duluth Telephone Co., 84 Minn. 486, 87 N. W. 1127; State ex rel. Wisconsin Telephone Co. v. City of Sheboygan et al., 114 Wis. 505, 90 N. W. 441, 442; Farmer & Getz v. Columbiana Co. Telephone Co., 72 Ohio St. 526, 74 N. E. 1078, 1080; State ex rel. Rocky Mountain Bell Telephone Co. v. Mayor, etc., of City of Red Lodge, 30 Mont. 338, 76 Pac. 758; Chamberlain et al. v. Iowa Telephone Co., 119 Iowa, 619, 93 N. W. 596; State v. Nebraska Telephone Co., 127 Iowa, 194, 103 N. W. 120; Wisconsin Telegraph Co. v. Oshkosh, 62 Wis. 32, 21 N. W. 828 —and by the decision of Judge Beatty in the case of Sunset Telephone & Telegraph Co. v. City of Eureka et al. (C. C. N. D. Cal.) 172 Fed. 755.

For the reasons stated, the judgment is reversed, with directions to the court below to enter judgment for the complainant.

GILBERT, Circuit Judge (dissenting). By the opinion of the majority of the court it is held that the appellant has acquired a franchise for the use of the appellee's streets under and by virtue of section 536 of the Civil Code of California, enacted March 21, 1872, which provided that:

> "Telegraph corporations may construct lines of telegraph along and upon any public road or highway along or across any of the waters or lands within this state," etc.

It is matter of common knowledge that, at the time of the adoption of the statute, telephones for public use were unknown. The opinion does not attempt to construe the statute, or to say that it authorizes the construction and maintenance of telephone lines; nor does it deny the doctrine that in construing a statute that meaning must be given to its words which they had at the date of the act, a doctrine which is well established by the authorities. 26 Am. and Eng. Enc. of Law, 611, and cases there cited. In Wadsworth Board of Works v. United Telephone Co., 13 Q. B. D. 914, it was said that a word used in a statute must receive the popular meaning existing at the time when the act of Parliament was passed. In Sharpe v. Wakefield, 22 Q. B. D. 242, Lord Esher said:

> "Words of a statute must be construed as they would have been the day after the statute was passed, unless some subsequent statute has declared that some other construction is to be adopted, or has altered the previous statute."

Nor is it denied that in Richmond v. Southern Bell Telephone Co., 174 U. S. 761, 19 Sup. Ct. 778, 43 L. Ed. 1162, the Supreme Court, in construing a statute similar to section 536, held that its provisions had no application to telephone companies. Said the court in that case:

"In common and technical language alike telegraphy and telephony have different significations. Neither includes all of the other. The science of telephony as now understood was little known as to practical utility in 1866, when the greater part of the law contained in the title was passed. Telephone companies, therefore, are not within the category of the grantees of the privileges conferred by the statute."

But the opinion of the majority of this court assumes that all of these considerations are to be disregarded, and that section 536 of the Civil Code of California must be held to include telephone companies, under the doctrine that a federal court is bound to follow the construction placed upon a state statute by the highest judicial tribunal of the state. It is not to be doubted that, if the Supreme Court of California has placed a construction upon this precise statute, that construction must be adopted by a federal court. It is not asserted that this statute has ever been construed by the Supreme Court of California; but it is said that, because that court has held in Davis v. Pacific Tel. & Tel. Co., 127 Cal. 313, 57 Pac. 764, 59 Pac. 698, that the word "telegraph" as used in another statute, a section of the Criminal Code of that state, should be construed to include "telephone," a construction has been placed upon the word "telegraph" as used in section 536 which this court is bound to follow. This proposition, I confidently assert, is unsupported by reason or authority. While there is a prima facie presumption that the meaning of a word repeatedly used in the same statute is identical in all cases, unless there is something to show a different intention, the presumption is at best a weak one, or, as Endlich says (section 387), "it is not of much weight." But such a prima facie presumption has not been held to apply to words used in different statutes. On the contrary, the doctrine is well sustained that there is no presumption that a word is used in the same sense in different statutes. In L. & N. R. Co. v. Gaines (C. C.) 3 Fed. 266, it was held that the fact that the Constitution of a state uses a word in one sense in one clause is no evidence that it is used in the same sense in every other clause, and that even in the same statute a word is often used with distinctly different meanings; the court giving to it in each instance the meaning which the Legislature intended it to have in that particular connection. In State v. Knowles, 90 Md. 654, 45 Atl. 878, 49 L. R. A. 695, the court said:

"It may, indeed, well be conceded that, where a word susceptible of more than one meaning is repeated in the same act or section of an act (either meaning being in each case open to reasonable adoption), a presumption arises, more or less forcible according to the circumstances, that it is used throughout in the same sense; but where the subject-matter to which the word refers is not the same in both clauses, or where the surrounding circumstances are different, this presumption must yield to an adverse presumption, furnished by an analysis of the various purposes of the law and of the language in which those purposes are expressed."

See, also, Henry v. Trustees, 48 Ohio St. 676, 30 N. E. 1122, and cases there cited.

Section 536 of the Civil Code and section 591 of the Penal Code are subject to different rules of construction. The latter was, in the Davis Case, construed under the authority of section 4 of the Penal Code, which provided that:

"The rule of the common law that penal statutes are to be strictly construed has no application to this Code. All its provisions are to be construed according to the fair import of their terms with a view to effect its object and to promote justice."

But the construction of section 536 is controlled by the general rule, which is thus expressed in Knoxville Water Co. v. Knoxville, 200 U. S. 22, 26 Sup. Ct. 224, 50 L. Ed. 353:

"Only that which is granted in clear and explicit terms passes by a grant of property, franchises, or privileges in which the government or the public has an interest. Statutory grants of that character are to be construed strictly in favor of the public, and whatever is not unequivocally granted is withheld. Nothing passes by mere implication."

The provision of section 4480 of the Political Code that, with relation to time, the provisions of the four Codes must be construed as though all such Codes had been passed at the same moment of time and were parts of the same statute, does not purport to say that a word used in the statutes shall have the same meaning wherever used, and it has no bearing upon the question whether the Supreme Court of California has construed section 536 of the Civil Code; and the decision of that court in Bruner v. Superior Court, 92 Cal. 239, 28 Pac. 341, that under section 4480 the word "elisor," as used in Code Civ. Proc. § 226, must be deemed to have been used with reference to its definition given in the Political Code, has no application here, for the reason that the word "telegraph" has not been defined in either of the Codes, as was the word "elisor."

In Wood v. Brady, 150 U. S. 18, 14 Sup. Ct. 6, 37 L. Ed. 981, it was held that the construction placed by a state court upon one statute implies no obligation on its part to put the same construction upon a different statute, although the language of the two may be similar. In Carroll v. Carroll's Lessee, 16 How. 275, 14 L. Ed. 936, it was held that the construction placed upon a state statute by the highest court of that state, in a case where the decision did not necessarily involve the construction of the statute, is not binding on the federal courts. In Caesar v. Capell (C. C.) 83 Fed. 403, it was held that, while federal courts follow the construction of the state statutes given by the courts of the state, they are not required to adopt a construction based on implications from the language of a judicial opinion. In Southern Ry. Co. v. Simpson, 131 Fed. 705, 65 C. C. A. 563, it was held that the opinion of a state court of last resort construing a state statute is conclusive on the federal courts sitting in such state to the extent only of the precise question decided. Said Judge Lurton, for the court:

"The opinion as a construction of the statute is authoritative to the extent of the precise question decided, and no farther."

I submit that not only has section 536 not been construed by the Supreme Court of California, but that we have no means of knowing, from any of the decisions of that court, what construction would be placed upon it in a case involving its meaning. I think that the opinion of the court below (164 Fed. 561) correctly disposes of the questions of law involved in the case, and that the judgment should be affirmed.

(172 Fed. 859.)

HOLEPROOF HOSIERY CO. v. WALLACH BROS.

(Circuit Court of Appeals, Second Circuit. July 31, 1909.)

No. 287.

1. TRADE-MARKS AND TRADE-NAMES (§ 85*)—RIGHT TO PROTECTION—MISLEADING NAME.

Manufacturers of hosiery under the name "Holeproof" are not precluded from an injunction protecting the use of such name by the fact that it is false and misleading; it being merely a boastful and fanciful word not intended as a representation that the hose manufactured and sold by complainant thereunder would never wear out.[1]

2. TRADE-MARKS AND TRADE-NAMES (§ 3*)—DESCRIPTIVE NAME.

A trade-mark "Holeproof" used in the manufacture and sale of hosiery is not objectionable as descriptive.

[Ed. Note.—For other cases, see Trade-Marks and Trade-Names, Cent. Dig. § 6; Dec. Dig. § 3.*

Arbitrary, descriptive, or fictitious character of trade-marks and trade-names, see note to Searle & Hereth v. Warner, 50 C. C. A. 323.]

3. TRADE-MARKS AND TRADE-NAMES (§ 59*)—INFRINGEMENT—INJUNCTION.

The word "Knotair" is not an infringement of the word "Holeproof" as applied to the manufacture and sale of hosiery.

[Ed. Note.—For other cases, see Trade-Marks and Trade-Names, Cent. Dig. §§ 68, 72; Dec. Dig. § 59.*]

4. TRADE-MARKS AND TRADE-NAMES (§ 95*)—INFRINGEMENT—PRELIMINARY INJUNCTION.

Where, in a suit to restrain the infringement of plaintiff's trade-mark and for unlawful competition, there was some evidence that defendants had sold hose of other manufacture for "Holeproof" hose of complainant's manufacture, a preliminary injunction restraining sales of such goods unless the customer is informed that the goods offered are not complainant's was properly granted.

[Ed. Note.—For other cases, see Trade-Marks and Trade-Names, Cent. Dig. § 108; Dec. Dig. § 95.*]

Appeal from the Circuit Court of the United States for the Southern District of New York.

Bill by the Holeproof Hosiery Company against Wallach Bros. From an order (167 Fed. 373) granting a preliminary injunction, defendant appeals. Modified and affirmed.

This cause comes here upon appeal from an order of the Circuit Court, Southern District of New York enjoining defendant:

(1) From "using and employing in connection with the manufacture, advertising or sale of hosiery, not the product of complainant, the word 'holeproof' or any like word."

(2) From "supplying in response to requests for 'Holeproof Socks,' or 'Holeproof Hosiery' any socks or hosiery not the product of complainant."

(3) From "using or employing in connection with the manufacture or sale of hosiery not the product of complainant the words 'Guarantee,' 'Guaranteed Hose' or 'Guaranteed Hosiery' or like words, provided and when such expressions are contained, printed, set forth or advertised in words, letters or figures or used or employed upon or in connection with style of package, labeling,

[1] See note at end of case.

dressing, use of colors and arrangement of type calculated to induce the belief that defendant's guaranteed 'Knotair' hosiery is complainant's guaranteed 'Holeproof' hosiery."

(4) From "using or employing in connection with the manufacture, advertisement or sale of hosiery, not complainant's product boxes, labels, guarantee tickets, bands or devices identical with or like those shown in and by Exhibit A or Exhibit B."

(5) From "doing any act or thing in the manufacture, advertisement or sale of hosiery calculated to induce the belief, that any such product, not complainant's, is the product of complainant."

With the proviso that nothing in the order contained, "shall enjoin or restrain defendant from using the word 'Knotair' as applied to hosiery, when such use is not accompanied or induced by deceptive or imitative methods in the packing, labeling, dressing, use of colors and arrangement of type."

The opinion of the Circuit Court is reported in 167 Fed. 373.

A. P. Jetmore, for appellant.

Walter C. Booth (Frank F. Reed and Edward S. Rogers, of counsel), for appellee.

Before LACOMBE, COXE, and NOYES, Circuit Judges.

LACOMBE, Circuit Judge. Inasmuch as this is an appeal from a preliminary order, and it is quite possible that in some respects the record made at final hearing may differ from that which is now before us, it seems wise carefully to restrict the discussion of the questions presented on the argument, and briefly to indicate our conclusions as to the merits of the precise case here presented.

Defendant contends that complainant has no standing in a court of equity because the name it has applied to its hosiery "Holeproof" is false and misleading. We are not impressed by this argument. No one surely could be misled into the belief that holes will not appear in complainant's socks if they are worn long enough, and it is difficult to conceive that any one could be fatuous enough to suppose that by the use of such a word he could deceive people by inducing a belief that the goods to which it was applied would never wear out. It is a boastful and fanciful word, easily to be distinguished from the "Syrup of Figs" and similar cases where the name or description involved misstatements as to the manufacture of the advertised product.

Nor do we find any particular force in the objection that the word is descriptive. The record, as it now stands, sufficiently indicates that by expensive advertising and large sales during several years the word "Holeproof" has acquired a secondary meaning, indicating to the prospective purchaser, not that socks sold under it are indestructible, but that they are those which complainant has been making and supplying to consumers, apparently to their entire satisfaction.

The injunction, however, is too broad, and should be modified in these respects.

(1) There is no evidence whatever in the record that defendant has ever used the word "Holeproof" or any other word than "Knotair" in connection with the manufacture, advertisement or sale of its goods. Indeed, since "Knotair" is its own distinctive trade-name there seems no likelihood of its doing so. Therefore, as we concur with the court below in the conclusion that, standing alone, the word "Knotair" is

not an infringement of "Holeproof," we find no warrant in the testimony for the first clause of the injunction.

(2) As to sales of defendant's product in response to a request for "Holeproof" hosiery, the testimony is conflicting. In the case of two sales the assertions of complainant's witnesses are squarely denied by defendant's. In two other cases the denial is not so positive; the witness not recollecting the precise transaction. Upon the record as it stands complainant is entitled to the security of an injunction, until final hearing, when the facts may be more fully shown. Such an injunction can work no prejudice to defendant, if it is truthful in the assertion that its sole object is to sell its own goods under their own name and on their own merits. The second clause of the order appealed from is, however, too broadly phrased. It would prevent selling to a customer, who asked for "Holeproof socks," any goods made by defendant, even after it was fully explained to such customer that they were not what he came to buy, but another and different brand made by defendant. It should be modified.

(3) Taking into consideration resemblances in shape and character of package which result from conformity to custom of the trade, we are unable to concur in the conclusion that there is sufficient similarity as to packages, labeling, etc., to warrant preliminary injunction, in the absence of proof that any one has been deceived by defendant's acts in that regard. This disposes of the third and fourth clauses of the injunction, which as thus modified is affirmed, with half costs of this appeal to defendant.

NOTE.[1]

Misleading or False Labels.

I. In General.

[a] (U. S. 1896) Inaccurate statements in labels, if entirely immaterial, are not such false representations as will bar a suit to enjoin infringements.—Tarrant & Co. v. Johann Hoff, 22 C. C. A. 644, 76 Fed. 959.

[b] (U. S. 1902) The preparation known as "Hostetter's Bitters," having been made, sold, and known to the public for many years, has acquired a commercial value which entitles the proprietors to the protection of the courts in its sale, and they will not enter upon the question of its merits, as a remedy for the ailments for which it is recommended, at the instance of a defendant who has been engaged in selling a spurious article for the genuine.—Samuel Bros. & Co. v. Hostetter Co., 55 C. C. A. 111, 118 Fed. 257.

[c] (U. S. 1900) A complainant's right to relief in equity against unfair competition cannot be defeated on the ground that it has been guilty of fraud in misrepresenting to the public the origin of an article manufactured by it, which is not involved in the suit.—Heller & Merz Co. v. Shaver (C. C.) 102 Fed. 882.

[d] (D. C. 1906) Where any symbol or label claimed as a trade-mark is so worded as to contain a distinct assertion which is false, no property right can be claimed; nor can the right to the exclusive use of it be maintained in a court of equity.—Schuster Co. v. Muller, 28 App. D. C. 409.

[e] (Ill. 1904) The mere fact that a person who has a lawful property in a trade-name has sought to deceive the public by false representations does not defeat his right to protect such a trade-name in a court of equity, where

[1] Supplemental to note to Raymond v. Royal Baking Powder Co., 29 C. C. A. 250.

such false representations were with respect to immaterial matters, and the trade-name itself does not contain any misrepresentations.—Wormser v. Shayne, 111 Ill. App. 556.

[f] (La. 1909) The owner of a trade-mark not used in accordance with its true meaning has no equity to sustain a suit to protect it.—New Orleans Coffee Co. v. American Coffee Co. of New Orleans, 49 South. 730.

[g] (N. J. 1906) If the commodity which complainant is selling under a trade-name or symbol is offered to the public under a misrepresentation, he has no standing, nor can he call upon the court to aid him in preserving the right to deceive the public without interruption.—Bear Lithia Springs Co. v. Great Bear Spring Co., 71 N. J. Eq. 595, 71 Atl. 383.

[h] (N. Y. 1908) The right to a name used by persons in their calling is similar to the right to the use of a trade-mark, which right equity will not protect where the name or phrase claimed as such is intended and calculated to deceive the public.—Fay v. Lambourne, 124 App. Div. 245, 108 N. Y. Supp. 874.

II. STATEMENT AS TO ORIGINATOR, MANUFACTURER, OR PLACE OF MANUFACTURE.

[a] (U. S. 1908) Where complainant in a suit to restrain infringement of a trade-mark, "Beecham's Pills," only represented in connection with the sale of the pills that they were prepared and sold by complainant in St. Helens, England, and in New York, a statement that "the pills accompanying this pamphlet are specially packed for U. S. America" was insufficient to show a misrepresentation that the pills were made in England, so as to preclude complainant from equitable relief.—Beecham v. Jacobs, 86 C. C. A. 623, 159 Fed. 129.

[b] (U. S. 1899) The mere fact that complainants, as partners, conduct their business under the name of the "Standard Distilling Company," is not sufficient to show that they represent themselves as a corporation for the purpose of deceiving and defrauding the public, so as to debar them of the right to invoke the protection of a court of equity in the use of such name.—Block v. Standard Distilling & Distributing Co. (C. C.) 95 Fed. 978.

[c] (U. S. 1900) A complainant using the name of "Old Country Soap" on a soap manufactured in the United States, for the purpose of inducing persons who came to this country from Europe to believe such soap was made in the "old country," is not entitled to protection in the use of such name as a trade-name by a court of equity.—Allan B. Wrisley Co. v. Iowa Soap Co. (C. C.) 104 Fed. 548.

[d] (U. S. 1903) In a suit for infringement of a trade-mark for whisky, the testimony and exhibits of complainant showed that his trade-mark as registered and used on his barrels and bottles contained a representation that his whisky was made in Nelson county, Ky.; that he also conspicuously advertised such to be the fact by the markings on his packages, and by advertising matter, using cuts of a distillery, with the words "Old Style Nelson County Pure Rye," etc. It was shown without contradiction that he owned no distillery, that whisky sold by him was purchased from rectifiers, was not made in Kentucky, and was not a pure rye or bourbon as represented, but a blended whisky flavored, and containing coloring matter, his trade-mark being stenciled on the barrels at his request. *Held* that, both his trade-mark and business being founded on false representations intended to deceive the public, a court of equity would not entertain a suit for their protection by enjoining another from infringing his trade-mark.—Uri v. Hirsch (C. C.) 123 Fed. 568.

[e] (Cal. 1904) The use by a corporation of the name of an individual, who at one time had been its president, as its corporate name, and his surname, used possessively, under which it had built up its reputation, as its popular name, does not import a declaration that a person of the name used is now connected with it, so as to render such use fraudulent.—Dodge Stationery Co. v. Dodge, 145 Cal. 380, 78 Pac. 879.

[f] (Ga. 1898) Certain shoes were stamped, "Old Colony Shoe Company, Rockland, Mass." There was no such company in existence, and the shoes were not manufactured in Rockland, which was a city having a reputation for

the manufacture of fine shoes. *Held*, that the firm originally using such trade-mark was not entitled to protection in its use, since it had a tendency to deceive the public.—Coleman, Burden & Warthen Co. v. Dannenberg Co., 30 S. E. 639.

[g] (Ill. 1901) The fact that the trade-mark of a manufacturer of butterine contains the words "The only high grade" is not to be construed as a statement that he is the only manufacturer of high-grade butterine, or that the use of the word "only" discloses fraud or deception of such a character as to deprive him of the protection of a court of equity in its use as a trade-mark.—William J. Moxley Co. v. Braun & Fitts Co., 93 Ill. App. 183.

[h] (Md. 1906) Plaintiff sued to restrain defendants from publishing, circulating, and selling an almanac designated as "J. & C. Gruber's Hagerstown Town and Country Almanac for the Year 1906, and any other almanac in colorable imitation of plaintiff's almanac," published by plaintiff corporation. At the top of plaintiff's almanac appeared the words: "Entered according to the act of Congress, in the year 1905, by J. Gruber in the office of the Librarian of Congress at Washington." The title of the almanac was "J. Gruber's Hagerstown Almanac." Near the bottom of the title-page were the words: "Hagerstown, Md. Printed by John Gruber"—and at the top of the second page was a notice, signed "John Gruber," dated Hagerstown, July, 1874, authorizing plaintiff corporation to publish the almanac, and at the bottom of the third page were the words: "Hagerstown, Maryland. Printed and sold by John Gruber, South Potomac Street." *Held*, that such statements, though erroneous, were not such as to deceive the public, and were therefore insufficient to deprive plaintiff of the right to an injunction.—Gruber Almanack Co. v. Swingley, 103 Md. 362, 63 Atl. 684.

[i] (Mass. 1909) One engaging in the shoe business on his own account under an assumed name bought his goods from one manufacturing the shoes for him according to his directions as to design, material, workmanship, etc. He stamped on the shoes the assumed name, and he adopted the name as a trade-mark. He was known to the trade as a manufacturer, and not as a jobber, and his letter heads contained the assumed name, followed by the words "Manufacturers of * * * Shoes." *Held*, that, he was not guilty of such fraudulent representations as would defeat his right to recover the profits realized by another through the wrongful use of the trade-mark.—Nelson v. J. H. Winchell & Co., 89 N. E. 180.

[j] (N. J. 1906) Complainant's advertisement of its water as "bottled at the spring," when in fact it was bottled at a city warehouse, and a declaration in such advertisement that such water was a cure for certain diseases named therein, contrary to the truth, were such misrepresentations as will induce the court to refuse complainant relief in a suit to enjoin the infringement of his trade-name.—Bear Lithia Springs Co. v. Great Bear Spring Co., 71 N. J. Eq. 595, 71 Atl. 383.

[k] (N. J. 1907) Where complainant seeks to protect a trade-name from unfair competition, he will not be refused relief because for several years he circulated catalogues and price lists containing false statements as to his exclusive right to the name, where it is not proved that the trade-name owes its value to such false representations, and the publication had ceased prior to the filing of the bill.—Johnson & Johnson v. Seabury & Johnson, 67 Atl. 36.

[l] (N. Y. 1906) Where complainants were the sole proprietors of a certain kind of cigarette paper, manufactured exclusively for them in Paris, and all of the paper was stamped with complainants' watermark, and was unobtainable by others, complainants' representation that they were "sole manufacturers" of the paper in Paris, when in fact they had no factory there, was not such a material misrepresentation as precluded them from equitable relief against a fraudulent infringement thereof. Order (1904) 99 App. Div. 361, 91 N. Y. Supp. 223, affirmed.—Gluckman v. Strauch, 186 N. Y. 560, 79 N. E. 1106.

[m] (Wis. 1904) Under Rev. St. 1898, § 1409g, permitting the sale of proprietary medicines bearing the name of the physician or pharmacist preparing the same, a proprietary medicine label which falsely states that the medicine is put up by a physician will not be protected by injunction.—Lemke v. Dietz, 121 Wis. 102, 98 N. W. 936.

III. STATEMENT AS TO CHARACTER OF ARTICLE.

[a] (U. S. 1903) The use of the term "Syrup of Figs" to designate a laxative medicinal preparation, together with printed statements and designs upon the bottles containing the compound and on the cartons and wrappers, calculated to induce the public falsely to believe that fig juice is an important element in the composition of such preparation, whose operative laxative element is senna, involves such deceit and misrepresentation as will deprive the manufacturer of equitable relief against the sale by another of a medicinal preparation named, marked, and packed in imitation of the older medicine, for the purpose and with the design and intent of deceiving purchasers and inducing them to buy the new preparation instead of the old one. Decree (1900) 42 C. C. A. 383, 102 Fed. 334, reversed.—Clinton E. Worden & Co. v. California Fig Syrup Co., 187 U. S. 516, 23 Sup. Ct. 161, 47 L. Ed. 282, 102 O. G. 623.

[b] (U. S. 1900) A complainant cannot maintain a suit in equity to protect his monopoly in the use of a trade-name, which is in fact the name of an article well known in foreign countries, on the ground that the product to which he applies it is a new article of manufacture, and not the article of which the name is descriptive, where he has represented by his labels and otherwise that it was such article, and has built up the business which he seeks to protect upon such representations.—Dadirrian v. Yacubian, 39 C. C. A. 321, 98 Fed. 872, affirming decree (C. C. 1898) 90 Fed. 812.

[c] (U. S. 1906) Complainants manufactured and sold "Angostura" bitters under representations that it consisted of a mixture of certain bitter, aromatic, and carminative substances, together with alcohol added as a preservative solvent, and that the bitters did not contain any "intoxicating ingredients." An advertising circular contained certificates of physicians and customers, representing that the bitters were a valuable remedy for nearly all ills, and when mixed with water, beer, wine, and spirits, made a "splendid drink," and also that the bitters were free from dangerous ingredients and might be used by invalids, adults, and children to advantage. *Held*, that the statement that the bitters contained no intoxicating ingredients should be construed as referring to the herbs and simples of which it was composed, and that such representations were not so false and fraudulent as to deprive complainants of relief in a suit to enjoin unlawful competition. Decree (C. C. 1905) 139 Fed. 917, reversed.—Siegert v. Gandolfi, 79 C. C. A. 142, 149 Fed. 100.

[d] (U. S. 1907) Complainant and its predecessors since 1888 manufactured and widely advertised and sold a patent medicine, called "Alpenkrauter," as a blood purifier, claimed to cure a great number of diseases, which in fact it did not do. The public was cautioned not to consult physicians nor druggists, because the medicine was not for sale there, and, while it claimed that the medicine was composed in part of imported herbs, complainant's witness refused before the master to disclose the ingredients of the medicine or to state from what herb houses or firms the herbs were purchased. *Held*, not to show that complainant did not come into equity with clean hands, and was therefore not entitled to relief against defendants' unfair competition by the sale of another medicine under a similar name.—Dr. Peter H. Fahrney & Sons Co. v. Ruminer, 82 C. C. A. 621, 153 Fed. 735.

[e] (U. S. 1897) A manufacturer of cigars placed in each box thereof a printed statement that only the best grades of Havana tobacco were used in the cigars, which were guaranteed to be of choice Havana tobacco. In fact, the cigars contained a considerable proportion of inferior tobacco, not Havana, and in some instances no Havana tobacco at all. *Held*, that this was such a misrepresentation as to disentitle the manufacturer to relief against an imitator of his labels, advertisements, etc., though found clearly guilty of unfair competition.—Hilson Co. v. Foster (C. C.) 80 Fed. 896.

[f] (U. S. 1899) The fact that the wrappers in which a medicine is placed on the market contain an erroneous statement that the compound is purely vegetable, where the same wrapper truthfully gives the formula in accordance with which it is made, is not such a fraud as will defeat the right of the manufacturer to relief from unfair competition, nor will a claim improvident-

ly or mistakenly made in a former suit against different defendants, and which could not be sustained, preclude the complainant from alleging the true state of facts in the subsequent suit.—Centaur Co. v. Robinson (C. C.) 91 Fed. 889.

[g] (U. S. 1903) Where a trade-mark contains false representations with respect to the article on which it is used, it will not be protected by a court of equity, and it is immaterial that the article may be as good as that which it is falsely represented to be.—Uri v. Hirsch (C. C.) 123 Fed. 568.

[h] (U. S. 1905) Statements made on the labels and wrappers of a preparation as to its medical value and the cures it has effected are so largely of matters of opinion rather than statements of fact that, although apparently extravagant, they will not justify a court of equity in refusing a preliminary injunction against an imitator, who is clearly infringing the proprietary rights of the maker.—Moxie Nerve Food Co. v. Holland (C. C.) 141 Fed. 202.

[i] (U. S. 1907) Where a proprietary preparation purchased and used largely as a mere beverage was also falsely and fraudulently represented by its manufacturer to contain valuable medicinal ingredients, a court of equity cannot afford protection to any part of its business against infringement of trade-mark or unfair competition.—Moxie Nerve Food Co. of New England v. Modox Co. (C. C.) 152 Fed. 493.

[j] (Ala. 1906) Where, in a suit to restrain the infringement of a trade-mark adopted by complainant to identify whisky manufactured, bottled, and sold by him, the evidence showed that the contents of the bottles fell far short of what the label and lettering indicated, and that the bottles were so labeled and lettered as to induce the public to believe that they were obtaining a quality of whisky far superior to what they actually bought, equity will not interfere.—J. W. Epperson & Co. v. Bluthenthal, 42 South. 863.

[k] (D. C. 1908) Where one of the parties to a trade-mark interference proceeding bases its right to registration of the word "Brookwood," as a trade-mark for whisky, upon prior use of the mark, and it appears that the applicant's labels containing the mark state that the whisky is a pure rye whisky, while the evidence shows that it contains rye, bourbon whisky and neutral spirits, he is not entitled to register the mark, because of the false and misleading statements on the labels.—Levy v. Uri, 31 App. D. C. 441.

[l] (Iowa, 1904) One who seeks to restrain the use by another of a trade-name adopted by himself will be denied relief if he has been himself guilty of unfair competition, or has made false statements, calculated to deceive the public as to the nature, the constituent parts, or the makers of the article which he sells or as to whether it has been patented or not, or any other statements calculated to mislead or defraud.—Sartor v. Schaden, 125 Iowa, 696, 101 N. W. 511.

[m] (Md. 1902) Equity will not protect a trade-mark for a patent medicine, the statement on the label: "The great smallpox and diphtheria cure and preventive. Cures the worst cases without marking, unless already scabbed"—asserting a falsehood, and being designed to deceive the public.—Houchens v. Houchens, 95 Md. 37, 51 Atl. 822.

[n] (Neb. 1903) Mere statements of opinion as to the curative properties of a compound, or as to the cause of a disease concerning which there is a conflict of opinion, are not false representations, within the meaning of the rule that one deceiving the public by false representations as to the nature of the compound sold cannot enforce his trade-mark therein.—Newbro v. Undeland, 96 N. W. 635.

[o] (Tex. 1908) A wholesale grocer adopted as a trade-mark on his syrups the words "Georgia Coon." The words "Genuine molasses" were used in connection with the trade-mark on molasses that was not pure cane molasses, but was formed largely of glucose. It was generally known that the "Coon molasses" was not pure cane molasses, and no one could be deceived by the labels. There was nothing to show that genuine molasses could not be made from anything but the juice of sugar cane, or that the terms conveyed the impression that the molasses was so manufactured. *Held*, that the use of the words "Genuine molasses" was not such a deception as to prevent the wholesale grocer from obtaining relief in a court of equity against one infringing the trade-mark; molasses being defined as a thick, brown or dark colored,

viscid, uncrystallizable syrup which drains from sugar in the process of manufacture, and a blend of corn syrup, corn molasses, and cane syrup is genuine molasses.—Western Grocer Co. v. Caffarelli Bros. (Civ. App.) 108 S. W. 413.

IV. STATEMENT CLAIMING PATENT, COPYRIGHT, OR REGISTRATION OF TRADE-MARK.

[a] (U. S. 1901) No right to a trade-mark which includes the word "patent" and which describes the article as "patented" can arise when there is and has been no patent; nor is the claim a valid one for the other words used, where it is based upon their use in connection with that word. Decree, Rahtjen's American Composition Co. v. Holzappel's Composition Co. (1900) 41 C. C. A. 329, 101 Fed. 257, reversed.—Holzapfel's Compositions Co. v. Rahtjen's American Composition Co., 183 U. S. 1, 22 Sup. Ct. 6, 46 L. Ed. 49, 97 O. G. 958.

[b] (U. S. 1908) Where complainant sold pills that were not patented under the name "Beecham's Patent Pills," the word "patent" was employed in a mere proprietary sense, to indicate that the pills were made according to Beecham's secret formula, and not necessarily that they were manufactured under letters patent, and hence did not constitute such a misrepresentation as to preclude plaintiff from relief in equity against the infringement of plaintiff's trade-mark, "Beecham's Pills."—Beecham v. Jacobs, 86 C. C. A. 623, 159 Fed. 129.

[c] (U. S. 1902) The use by the manufacturer of an article, for several years after a patent therefor had expired, of advertising circulars containing the word "patented," or statements clearly implying that it was protected by a patent, which circulars were inclosed in the packages in which the article was sold, is such a fraud as will preclude relief in equity against unfair competition, although no such statements were made in connection with complainant's trade-mark, or on the packages themselves; it being impossible for the court to determine to what extent the value of complainant's business, which it is asked to protect, is due to such fraudulent action.—Preservaline Mfg. Co. v. Heller Chemical Co. (C. C.) 118 Fed. 103.

[d] (U. S. 1905) Where the printing on the back of complainant's card containing hooks and eyes did not claim that the hump feature was patented, but merely directed attention to complainant's articles by referring thereto as the "De Long Patent Hook and Eye," and contained a sketch thereof, with an index line pointing significantly to the hump or a spring tongue of the hook, such reference to a patent, which had been held invalid except as to the triple band of spring wire to strengthen the hook, did not constitute such a deception of the public as precluded complainant from relief in a court of equity against unfair competition.—De Long Hook & Eye Co. v. Francis Hook & Eye & Fastener Co. (C. C.) 139 Fed. 146.

[e] (Ill. 1904) Where, in connection with the use of a trade-name, the word "copyright" is used, when no copyright actually exists, it cannot be said that such trade-name includes a misrepresentation which will defeat the right of the owner to protect such trade-name by injunction in a court of equity; nor does the fact that, in connection with the use of such trade-name, the owner thereof falsely claimed that he had ten stores located in various cities, when in fact he had but seven, defeat such right of protection.—Wormser v. Shayne, 111 Ill. 556.

[f] (N. J. 1900) Where complainant advertised that its method of marking its name on the selvedge of silk was patented, and no patent right existed, such action was ground for refusing complainant a preliminary injunction against one alleged to be infringing complainant's name and method of use, where it did not appear that the necessity for such interference was absolutely imperative.—Stirling Silk Mfg. Co. v. Sterling Silk Co. (Ch.) 46 Atl. 199.

V. CORRECTING FALSE STATEMENT AFTER COMMENCEMENT OF ACTION.

[a] (N. J. 1905) The fact that complainant in a suit to enjoin unfair competition from the use by defendant of labels similar to those of complainant had, three years before the suit was brought, falsely represented in its circulars that it had, by act of Congress, exclusive right to use the devices which its labels bore, did not disentitle it to relief; the false claim having been withdrawn.—Johnson & Johnson v. Seabury & Johnson (Ch.) 61 Atl. 5.

(172 Fed. 913.)

UNITED STATES v. STEINMAN.

(Circuit Court of Appeals, Third Circuit. October 6, 1909.)

No. 53.

1. BANKS AND BANKING (§ 256*)—FUNDS—"WILLFUL MISAPPLICATION."

"Willful misapplication" of the funds of a national bank, in order to constitute an offense denounced by Rev. St. § 5209 (U. S. Comp. St. 1901, p. 3497), must be a willful misapplication for the use or benefit of accused, or of some person or company other than the banking association, with intent to injure and defraud the association, or some other body corporate or natural person, being entirely different from acts constituting an official maladministration, subjecting the bank to a forfeiture of its charter, as provided by section 5239 (page 3515).

[Ed. Note.—For other cases, see Banks and Banking, Cent. Dig. § 964; Dec. Dig. § 256.*

For other definitions, see Words and Phrases, vol. 8, pp. 7482–7483.]

2. BANKS AND BANKING (§ 256*)—MISAPPLICATION OF FUNDS—OVERDRAFTS.

An unintentional overdraft by a depositor in good standing and possessing ample means to pay, or an overdraft to be paid pursuant to a prior agreement resting on abundant credit, does not constitute a willful misapplication of a national bank's funds, in violation of Rev. St. § 5209 (U. S. Comp. St. 1901, p. 3497).

[Ed. Note.—For other cases, see Banks and Banking, Cent. Dig. §§ 964, 965; Dec. Dig. § 256.*]

3. BANKS AND BANKING (§ 257*)—NATIONAL BANKS—MISAPPLICATION OF FUNDS—EVIDENCE.

In a prosecution for aiding and abetting the officers of a national bank to willfully abstract the funds of the bank by means of certain overdrafts, evidence that prior to the making of such overdrafts it was agreed that the bank should furnish funds for the operations of certain corporations in which accused and the bank's president and cashier were officers, and that from time to time notes should be given by such corporations to take up the overdrafts, and that at the time of the advances the value of the corporation's property was more than $300,000, while the overdrafts aggregated only $30,872.24, was admissible to show absence of criminal intent.

[Ed. Note.—For other cases, see Banks and Banking, Dec. Dig. § 257.*]

4. BANKS AND BANKING (§ 257*) — NATIONAL BANKS — MISAPPLICATION OF FUNDS—INSTRUCTIONS.

In a prosecution for aiding and abetting the willful misapplication of the funds of a national bank by its officers by overdrafts, an instruction that an arrangement by which the cashier and president of a banking institution allows its funds to be taken out is not a justification, since the funds of a national banking institution can only be taken out by the action of its board of directors, and that if by the paying of the checks constituting the overdrafts, or any of them, either the money of the bank was removed from its resources, or its capital reduced, or its charter endangered, any one of such things would be sufficient to warrant the jury in finding a misapplication with intent to injure the bank, was erroneous.

[Ed. Note.—For other cases, see Banks and Banking, Dec. Dig. § 257.*]

In Error to the District Court of the United States for the Western District of Pennsylvania.

E. H. Steinman was convicted of aiding and abetting the willful abstraction of the funds of a national bank, and he brings error. Reversed.

George C. Burgwin, Jno. E. Kunkle, and Edward E. Robbins, for plaintiff in error.

R. M. Gibson, Asst. Dist. Atty., for the United States.

Before GRAY and BUFFINGTON, Circuit Judges, and LANNING, District Judge.

BUFFINGTON, Circuit Judge. In the court below E. H. Steinman was convicted on an indictment charging him, under Rev. St. § 5209 (U. S. Comp. St. 1901, p. 3497), with aiding and abetting Charles E. Mullin, cashier of the Farmers' & Mechanics' National Bank of Mt. Pleasant, Pa., to willfully abstract the funds of said bank. On the imposition of sentence, Steinman sued out this writ of error.

The abstractions charged in the indictment consisted of overdrafts of the Acme Lumber & Supply Company aggregating $30,782.24. Steinman was not an officer of the bank. He was an officer and stockholder of the Acme Lumber & Supply Company, the Anchor Glass Company, and the Searchlight Manufacturing Company, three corporations engaged in manufacturing, building, and real estate operations at Mt. Pleasant. The proofs show that the alleged value of the properties of said companies was upwards of $300,000. In order to obtain further means for the operations of these companies, he applied to Hissem, the president, and Mullin, the cashier, of the bank, both of whom had stock in these companies. There were certain transactions in reference to the bonds of these companies which need not be detailed here; but the result of their negotiations, so far as pertinent to the questions raised by the assignments of error, was that the three companies were to be furnished funds as they were needed for their pay rolls and operations, and that, as the particular amounts to be finally apportioned to each company could not be determined at the time, the advances were to be made to the general account of the Acme Lumber & Supply Company, and that, as its account was from time to time overdrawn, notes were to be given by such of the companies as had used the funds to take up these overdrafts. On the trial, Steinman, in common with the other defendants, offered to prove the value of the property of the Acme Lumber & Supply Company, the Anchor Glass Company, and the Searchlight Manufacturing Company, whose notes were given as collateral to secure the payment of said checks according to the arrangement made before the checks were issued, "for the purpose of showing that there was no fraudulent intent to misapply the funds of the bank—a criminal intent being necessary to justify a conviction." This offer was objected to by the government as "incompetent, irrelevant, and immaterial to the issue, and not tending to throw light upon the intent of the defendants in paying out the moneys charged in the indictment as having been wrongfully misapplied by the defendants." To the court's action in sustaining this objection, exception was taken, and the court's ruling is here assigned for error. The substantial character of proof herein offered appears elsewhere in the record, showing that the value of the property of the three companies at the time of these advances was alleged to be more than $300,000. In its general charge, the court also said:

"An arrangement by which the cashier and the president of a banking institution allow the funds to be taken out is not a justification, either on the part of the president and cashier or on the part of a person dealing with the president and cashier. The funds of a national banking institution can only be taken out by the action of the board of directors."

And this also is assigned for error.

After careful consideration, we are of opinion the defendants were entitled to give in evidence all matters tending to show their good faith in the transaction in question, and that the overdrafts were not willful abstractions and misapplications under section 5209. An overdraft of an account is not per se and necessarily an abstraction of the bank's funds under section 5209 by the drawer of a check who has not funds to meet it, nor is the payment of such overdraft check by an executive officer of the bank, without action by the board, necessarily a misapplication under such section. Indeed, in Bolles on Modern Banking, p. 199, it is said:

"Generally, two kinds of overdrafts are as clearly justified as any other kind of a loan: (1) An unintentional overdraft by a depositor in good standing, and possessing ample means to pay; (2) an overdraft to be paid in pursuance of a prior agreement, resting on abundant credit."

It will thus be seen that the facts and circumstances attendant upon an overdraft may affect the character of the overdraft and determine whether it is criminal and within the purview of section 5209, which as we have seen concerns transactions where one "embezzles, abstracts or willfully misapplies." This is clearly shown in the cases involving that section before the Supreme Court. There the distinction is clearly drawn between acts of willful misapplication under section 5209, and those of maladministration in violation of statute section 5200 (page 3494), for example, that "the total liabilities to any association of any person * * * for money borrowed * * * shall at no time exceed one-tenth part of the capital stock of the association actually paid in," and which acts of maladministration shall under section 5239 (page 3515) subject the bank to forfeiture of its charter. Thus, in United States v. Britton, 107 U. S. 655, 2 Sup. Ct. 512, 27 L. Ed. 520, the court says:

"We are, therefore, of opinion that the willful misapplication of the moneys and funds of the banking association, which is made an offense by section 5209, means something different from the acts of official maladministration referred to in section 5239, and it must be a willful misapplication for the use or benefit of the party charged, or of some person or company other than the association, with intent to injure and defraud the association, or some other body corporate, or some natural person."

And in United States v. Northway, 120 U. S. 327, 7 Sup. Ct. 580, 30 L. Ed. 664, it is said:

"In the case of the United States v. Britton, 107 U. S. 655, 669, 2 Sup. Ct. 512, 27 L. Ed. 520, the offense of willfully misapplying the funds of a banking association, as defined by the statute, was considered with reference to the facts in that case. It was there held that a willful and criminal misapplication of the funds, as defined by section 5209, did not include every case of an unlawful application of funds, inasmuch as in the very statute itself there were other instances of unlawful misapplication, evidently not embraced within the intention of section 5209. For that reason it was held, in that case, that it was necessary to specify the particulars of the application, so as to distin-

guish that charged in the indictment as willful and criminal from those others contemplated by the statute which were unlawful, but not criminal."

Now this distinction between an unlawful act of maladministration, which, of course, misapplied the funds of the bank and subjected the bank to forfeiture of its charter, but which were not punishable under section 5209 as a willful misapplication, the court in its charge failed to draw, but, on the contrary, instructed the jury that such an unlawful act of maladministration evidenced an intent which warranted conviction. The language was:

"If by the paying of these checks, or any of them, either the moneys of the bank were removed from the resources of the bank, or its capital reduced, or its charter endangered, any one of these things would be sufficient to warrant you in finding that the misapplication was with intent to injure the banking institution."

Under the facts of the case there was really nothing left for the jury to pass on. Taking these overdrafts under the arrangement alleged, they were loans of more than one-tenth of the capital of the bank. In paying the checks the moneys of the bank were removed from its resources, and that they as excessive loans endangered the charter of the bank were all matters which could not be gainsaid, and from them the jury were in effect directed to infer the intent necessary in a conviction under this indictment.

Such instruction being at variance with the views expressed by the Supreme Court, we are of opinion that in this regard, as well as in ruling out the testimony mentioned, the defendant has just ground to complain, and the judgment imposed must be reversed.

(172 Fed. 916.)

CARTER RICE & CO. v. AUBIN.

(Circuit Court of Appeals, First Circuit. August 17, 1909.)

No. 815.

1. MASTER AND SERVANT (§ 289*)—INJURY TO SERVANT—CONTRIBUTORY NEGLIGENCE—WHEN QUESTION FOR JURY.

In an action by a servant against the master to recover for an injury resulting from the explosion of a can of wood alcohol, which he had set upon a bench on which was also a lighted lamp, contributory negligence as matter of law in setting the can very close to the lamp was not established by the opinion of an expert that there could have been no explosion if the can had been placed at the distance testified by plaintiff, where such opinion was based on the assumption that the vapor from the can would distribute itself evenly in all directions, without allowance for actual conditions, such as drafts or surrounding objects by which it might be affected.

[Ed. Note.—For other cases, see Master and Servant, Cent. Dig. §§ 1119, 1120; Dec. Dig. § 289.*]

2. EVIDENCE (§§ 546, 547*)—EXPERTS—EXAMINATION—DISCRETION OF COURT.

The exclusion of a question asked an expert witness, either on the ground that he was not shown to be qualified or because too general, is largely within the discretion of the court.

[Ed. Note.—For other cases, see Evidence, Cent. Dig. §§ 2363, 2364; Dec. Dig. §§ 546, 547;* Witnesses, Cent. Dig. § 849.]

In Error to the Circuit Court of the United States for the District of New Hampshire.

Robert Manning (Burnham, Brown, Jones & Warren, on the brief), for plaintiff in error.

Oliver E. Branch (Branch & Branch and Burns & Burns, on the brief), for defendant in error.

Before COLT, PUTNAM, and LOWELL, Circuit Judges.

COLT, Circuit Judge. This is a suit to recover damages for personal injuries caused by an explosion of wood alcohol. The plaintiff, while in the employ of the defendant, was engaged in soldering a dripping pan. He filled the lamp for heating the soldering iron from a gallon can containing about a quart of wood alcohol. He then set the can down upon the bench where he was working. Some 30 minutes afterwards the alcohol exploded, inflicting the injuries complained of. The room in which the plaintiff was working was 15 degrees warmer than the adjoining room, from which he took the can of alcohol just before beginning this work.

The jury in the court below returned a verdict for the plaintiff, and the case is before this court on writ of error.

The defendant relies upon two rulings of the court below to which exceptions were duly taken:

First. The refusal of the court to direct a verdict for the defendant on the ground that the plaintiff was guilty of contributory negligence as a matter of law.

Second. In overruling the following question propounded to Prof. Angell, defendant's expert:

"Whether or not cans such as this can are commonly used in various establishments of various kinds in keeping wood alcohol?"

1. In the trial court the question of the plaintiff's contributory negligence turned upon whether he set the can of alcohol in close proximity to the lamp, or at a reasonably safe distance. Upon this issue the evidence was conflicting. The plaintiff testified that he set the can about three feet away from the lamp. On the other hand, Pine, superintendent of the defendant's mill, testified that after the explosion he found the can from three to six inches from the lamp, which was still burning. Upon this state of proof the court submitted the question of contributory negligence to the jury under instructions to which no objection was taken.

The defendant now contends that the jury should not have believed the plaintiff's evidence that he set the can three feet away from the lamp, since it is contradicted by the scientific facts established by the testimony of defendant's experts, especially Prof. Angell, and that it necessarily follows from this testimony that the plaintiff must have set the "can in close proximity to the flame, which was, as a matter of law, an act of contributory negligence."

This contention of the defendant raises the single question whether the evidence of Prof. Angell and Mr. Robbins, defendant's experts, amounts to a demonstration of the physical fact that it was impossible for this explosion to have occurred by reason of the mixture of alco-

holic vapor with air when the can was three feet away from the lamp. The testimony of Mr. Robbins is of such a general and indefinite character that it calls for no special consideration. The only proof which approaches a scientific demonstration of this fact is found in the following testimony of Prof. Angell, upon which the defendant mainly relies:

"Q. Can you explain why it would be impossible for that lamp to cause an explosion three feet away under these circumstances? A. In order to produce an explosion with gas or vapor and air, there must be what we term an explosive mixture; that is, the gas or vapor must impregnate the air sufficiently so that it will take fire on contact with the flame and burn rapidly, and I should say on the least calculation we should have to allow 3 per cent. of vapor in the air in order to ignite it, and if the vapor was issuing from that can a distance of three feet all around it, it would fill a space six feet in diameter approximately, or about 600 gallons capacity, and 3 per cent. of that would be about 18 gallons or 72 quarts. I should judge the vapor in the can might occupy the space of 3 quarts. If we had a quart of liquid or alcohol in the can, there would be 3 quarts of vapor, and that would have to be augmented to 73 quarts at least to saturate this space sufficiently to cause an explosion—sufficiently to cause it to ignite if brought in contact with the flame three feet away."

In this statement Prof. Angell says that:

"If the vapor was issuing from that can a distance of three feet all around it, it would fill a space six feet in diameter approximately."

And he then proceeds to estimate the quantity of alcoholic vapor it would take to fill this space with an explosive mixture composed of vapor and air. Prof. Angell's calculations are based upon the assumption that the vapor issuing from the can is distributed uniformly in the space surrounding the can, and he does not take into consideration the actual or possible conditions and circumstances existing at the time, which enter into the situation and which may have affected the result. Taking this testimony of Prof. Angell as a whole, it amounts to little more than the theoretical statement by an expert that under certain ideal or perfect conditions, where the alcoholic vapor might be uniformly distributed, it would, according to the laws of physics, take a certain quantity of alcoholic vapor to fill a space around the can six feet in diameter with an explosive mixture of air and vapor.

Prof. Angell's statement is incomplete. It is not a demonstration of the physical fact in question, because it fails to consider all the surrounding conditions and circumstances. For example, this can rested on a bench, and this bench was near the side of the room; and the question arises how far these obstructions might have affected the distribution of the vapor and the direction it would take. Again, the plaintiff stood near the can; and the question arises to what extent his body and his movements during the 25 minutes he was engaged in his work would have affected the distribution and direction of this volatile gas.

Further, it is apparent that the vapor issued from this can under pressure, and therefore with considerable propelling force, like the steam issuing from a kettle of boiling water, and the question arises how far this circumstance would affect the situation, especially if the nozzle of the can was pointed in the direction of the flame of the lamp. Again, it is a well-known fact that atmospheric conditions are disturbed by the

flame of a lamp, and in this case there was a flame from four to five inches high from a lamp located three feet away from the can. Further, Prof. Angell's conclusion rests upon the assumption that during the 25 minutes this gas was escaping from the can there were no draughts or currents of air which would have disturbed the atmospheric conditions and which might have driven this vapor in the direction of the flame of the lamp.

Prof. Angell's conclusion is based upon the absence of all these disturbing elements or forces, and therefore it cannot be said to be a scientific deduction from all the facts and conditions which enter into the problem. It is manifest that a conclusion of this character cannot have the probative force of a demonstration of a physical fact; and hence it follows that this testimony is not sufficient to overcome the plaintiff's prima facie case.

Prof. Angell admits that his deductions in this case are founded upon his scientific observations and education rather than upon the specific facts and circumstances of this case:

"Q. Then what you say is the result of your deductions from scientific observations and education? A. Yes, sir.

"Q. Rather than from experience? A. No experience of any explosion similar to this."

For these reasons the first exception must be overruled.

2. With respect to the remaining exception, it is sufficient to observe that the court below excluded this specific question asked Prof. Angell on the ground that it was too general in its character. Before excluding this question, Prof. Angell has testified that he had no knowledge as to how wood alcohol was protected in establishments like the defendant's. Since the qualifications of Prof. Angell to testify as an expert respecting this particular inquiry, as well as the form and scope of the question propounded, were matters resting largely in the discretion of the court, we find no error in this ruling. Spring Company v. Edgar, 99 U. S. 645, 658, 25 L. Ed. 487.

The judgment of the Circuit Court is affirmed, and the defendant in error recovers costs in this court.

(172 Fed. 919.)

THE JAMES McWILLIAMS.

(Circuit Court of Appeals, Second Circuit. June 15, 1909.)

No. 266.

COLLISION (§ 66*)—VESSEL AT ANCHOR—DREDGE AT WORK.

A derrick, lawfully anchored about the middle of the East River while engaged in raising a sunken vessel, *held* entitled to recover damages from a tug whose tow came into collision with her, on the ground that it was the duty of the tug to use ordinary care and skill to avoid the derrick and that under the evidence she failed to do so.

[Ed. Note.—For other cases, see Collision, Cent. Dig. § 84; Dec. Dig. § 66.*]

Appeal from the District Court of the United States for the Southern District of New York.

In Admiralty. Action by the Merritt & Chapman Derrick & Wrecking Company, as owner of a derrick, against the steam tug James McWilliams for collision. Decree for libelant, and claimant appeals. Affirmed.

The following is the opinion of Adams, District Judge:

ADAMS, District Judge. The law in this case has been laid down in that of The Chauncey M. Depew, decided January 23, 1894, and reported in 59 Fed. 791. There it was held as follows (I read from the syllabus):

"1. Collision—Vessels at Anchor—Crowded Channel—Dredge Lawfully Moored. It is obligatory on their owners to raise, when practicable, vessels sunk in collision. Hence, a derrick anchored in the channel of the East River under a permit from the Secretary of the Treasury, occupied in raising a sunken vessel, and, though a partial obstruction to navigation, not such a complete obstruction, as to constitute a nuisance, was *held* not unlawfully anchored, though off the regular anchorage grounds, and not in fault for damage suffered by a vessel which collided with her.

"2. Same—Dredge Anchored in Narrow Channelway—Liability of Colliding Vessels. A derrick anchored in the crowded channelway of the East River engaged in raising a sunken vessel, although not unlawfully in such a position, was *held* not entitled to all the immunities of vessels anchored on anchorage grounds; and certain tugs which collided with her in spite of skill and diligence exercised by their pilots, were *held* not responsible for the damage to the derrick."

I had occasion to consider this method of anchoring vessels of the character involved in this case for the purpose of carrying on their work, in the case of the New England Transportation Company against the tug C. R. Stone, tried before me in December, 1906. As I recall the case, the vessels were moored under practically the same permit as that in this case. There the accident occurred in the channel between Blackwell's Island and New York. The tug was held in fault there for not having started soon enough to make the manœuver to cross from the port side of the Montauk to the starboard side, which was the side on which she should have passed, to accomplish the manœuver in safety. She was taking her tow along sidewise and it was because of that the collision happened. I do not think, however, that either of these cases covers this directly.

The facts here seem to be that this derrick took her position in the East River in pursuit of her lawful business and anchored properly at a point about the middle of the river. She was in that same position the morning of the day of the collision, but, as appears from the testimony, could only work during slack water, which varies from three quarters of an hour to an hour and a half. She had worked as long as she could in the morning and, not having finished, had resumed the work in which she was engaged, but was through with the work for that day at the time the collision occurred. While lawfully lying in that position this tug McWilliams with her tow came along and one of the barges ran into the derrick. The question here is whether the tug which was navigating the tow was in fault for the collision.

There have been numerous allegations of fault made here, but I think they can all be boiled right down into what is the substance of them, that is, that the collision occurred because of the tug failing to avoid this anchored vessel, which it was obliged to do if it was practicable.

It is claimed that the tug did everything she could to avoid colliding with the derrick and was unable to do so on account of a schooner which came along behind her and so crowded her as to force her, not only to try to turn away from the derrick, but before she could reach that point in the navigation to turn towards it, to avoid the schooner. If that is so, if a clear case of such navigation has been made out, I think the tug should be exonerated, because she could not know that this sailing vessel was going to come up the river and force her out of her course. She was not obliged to keep a lookout astern. But some of the parties on that tow have said that the schooner was seen at least as far west as the Bridge and perhaps the westerly side of the

Bridge. The question really is whether that schooner was close enough to the tug or tow to require the tug to turn out of her course.

We do not get any aid on this point from the people on the derrick. They did not see the schooner. They say there was a clear course for the tug and tow. There is no doubt, however, in my mind that the schooner was there. The only doubt is whether she was navigating as close to the tug and tow as the claimants here would have the court believe. All those on the tug say explicitly that the schooner passed very close to them, as I remember they said about twenty-five feet.

When the men from the tow are put upon the witness stand we get an entirely different aspect of the case. They impressed me as being desirous of telling the truth. Of course we all understand that men on a tug are naturally interested in their own vessel and look at things in a way which will, if possible, exonerate her, without meaning to tell untruths. But these men from the tow had no such interest. Although their boats were identified in a certain way with the claimant of the tug yet they were free from that bias which our experience tells us always accompanies the crew of a tugboat which is implicated in such an accident as this.

Those two men from the tow say in substance, although not in so many words, that there was room enough for the tug to navigate there without regard to the schooner; in other words, that the schooner did not come so close as those on the tug would have us believe.

It was necessary, of course, to avoid the derrick, and ordinary care and skill were required on the part of the tug to accomplish that, and the absence of such ordinary care and skill would constitute what the law calls negligence in such matters; that is, it is negligence for one vessel to run into another by not observing all the precautions which the necessity of the case would ordinarily require.

It is my impression that the tug unnecessarily turned towards the New York shore; that is, that she turned before there was any real necessity for it, and that in that way she threw her tow somewhat across the channel and subjected it to the strong flood tide which prevailed there, and that when she tried to recover it was too late, she could not pull the tow away from the derrick. The consequence was this collision happened, with some damage to the derrick and no damage to the barge except some marks upon it, at any rate, nothing as far as appears here that required any money expenditure to repair it.

On such a state of facts it seems to me that the tug must be held in fault, because she was bound to keep her tow away from this lawfully anchored vessel, unless something occurred which she could not anticipate and could not avoid, as in the Luzerne Case (D. C.) 148 Fed. 133. There the Luzerne was navigating up the river and a sailing vessel came along and forced her over, not only by probability of collision but, as I remember the case, by actual collision which had the tendency to turn the Luzerne towards the injured tow, which was on the other side of her. I held there that the accident was inevitable. The Circuit Court of Appeals affirmed that decision (157 Fed. 391, 85 C. C. A. 328), although not on the ground of inevitable accident but because they said it should have been seen and avoided; that is, that the schooner should have seen what would happen by her sailing there; that it was a case of carelessness and negligence on her part. In this case I think it was negligence on the part of the tug. I cannot but believe that the tug could have passed that derrick, on the Brooklyn side of her and at the same time have avoided the schooner. That being so there is nothing for me to do but to hold the tug in fault. I therefore order decree against the tug with order of reference.

De Lagnel Berier, for appellant.
W. J. Martin, for appellee.

Before LACOMBE, COXE, and NOYES, Circuit Judges.

PER CURIAM. Decree affirmed, with interest and costs.

(172 Fed. 922)

THE WILLIAM TRACY.

(Circuit Court of Appeals, Second Circuit. April 13, 1909.)

Nos. 224, 225.

COLLISION (§ 96*)—COLLISION AT ENTRANCE TO SLIP—NEGLIGENT MANEUVERS.

A collision between a tug coming out from a basin and a carfloat on the side of another tug, which had just passed out, *held* due to the fault of the latter in backing her tow across the narrow entrance in maneuvering to get her direction, without taking any precaution to notify vessels which might be coming out.

[Ed. Note.—For other cases, see Collision, Cent. Dig. §§ 203–205; Dec. Dig. § 96.*]

Appeals from the District Court of the United States for the Southern District of New York.

In Admiralty. Action by the Lehigh Valley Transportation Company, as owner of the tug Statington and tow, against the tug William Tracy, for collision; and cross-libel by Thomas Tracy, as owner of the William Tracy, against the Lehigh Valley Transportation Company. Decree in favor of cross-libelant, and libelant appeals. Affirmed.

The following is the opinion of Adams, District Judge, in the court below:

ADAMS, District Judge. This is one of those collision cases which are difficult to decide, because the movements are in such restricted waters, so to speak; that is, neither vessel has any such defined course as is necessary to aid one to look into the matter very thoroughly. Moreover, this all happened within a very short space of time, which adds to the difficulty of determining how the accident happened.

It appears that the tug Slatington had taken one carfloat on her port side and gone out from Morris Canal Basin, intending to take the float to a bridge which is slightly below the entrance to the basin. In coming out she had to go around two carfloats that were lying at Pier A, which was the outermost of three piers, the carfloats lying slightly inclined into the basin. When the tug got around there her Captain says he was backing and filling in order to get into shape to make the bridge. While so doing the tug Tracy, having taken a boat into Morris Canal Basin and landed it, turned around from there and was coming out. As she was coming out another tug, the Quigley, was going into the basin from up the river and interfered somewhat with the Tracy going out.

The testimony on the part of the Tracy, is that after she had got turned around to go out of the basin she blew a long whistle to give warning that she was coming out. If I recollect the testimony correctly it is that the Quigley on coming into the basin gave the Tracy two whistles, intending to pass starboard to starboard, but did not so pass because the Tracy, not hearing the two whistles as the Quigley's Captain thinks, blew a signal of one whistle for him to pass the other way. They were thus passing in a very narrow place—of about 200 feet in width—and the Tracy contends that when in that narrow space the tug Slatington appeared above the floats which were lying at Pier A, backing up the river. The testimony on the part of the Slatington is, that she was not backing up the river in that position. It seems to me that is really the pivotal point in this case. If the Slatington was backing and filling across the mouth of that slip she should then have had a lookout on her stern and should have been giving signals to any vessels that might wish to come out of the slip.

I am rather inclined to believe, from this very conflicting testimony, that it is probable that the Slatington did back up across the space which was between the boats that were lying tailing down into the slip and the carfloats which were lying at Pier A. I take it that is what the backing and filling

meant, that she was moving around there in order to get a proper heading for the bridge. When the Tracy came along and saw the Slatington, with her float extending above this space, she was naturally in a hazardous position. As I said a moment ago, this case turns upon whether or not the Slatington did get across that entrance to the slip. If the Slatington did get her tow across there then the collision is accounted for. I think she did. Backing and filling under those circumstances does not mean backing and filling out in the river, but such backing and filling as was necessary to make the bridge slip.

As to the testimony of the disinterested witness from the Transfer that the Slatington was not backing, his opportunities for observation were so limited that I hardly think they can overcome the natural probabilities, especially when supplemented by positive testimony from the Captain of the Tracy that the Slatington's tow suddenly appeared above the floats lying at Pier A.

My impression in this case is that the proximate cause of the collision was the backing and filling of the Slatington without taking any precaution to notify vessels coming out of the slip that she was there and would be engaged in an operation of that kind which would necessitate care on the part of the outgoing vessel.

Of course criticisms can be made on the navigation of the vessels apart from what I have said. It is nearly always so, that some criticism can be made upon the navigation of vessels engaged in a collision, but I think what I have just stated ought to determine this matter in favor of the Tracy and there will be a decree accordingly.

Robinson, Biddle & Benedict (Wm. S. Montgomery, of counsel), for appellant.

Carpenter, Park & Symmers (James Emerson Carpenter, of counsel), for appellee.

Before LACOMBE, WARD, and NOYES, Circuit Judges.

PER CURIAM. Decree affirmed, with interest and costs.

(172 Fed. 861.)

CHICAGO, I. & L. RY. CO. v. DAVIS.

(Circuit Court of Appeals, Seventh Circuit. June 23, 1909.)

No. 1,568.

MASTER AND SERVANT (§ 265*) — ACTION FOR DEATH OF SERVANT — BURDEN OF PROOF.

In an action against a railroad company for the death of a brakeman, alleged to have resulted from a defective hand hold on a car, where the right of recovery depended upon whether the defect existed when the car was inspected on the evening before, and was of such nature that it should have been disclosed by a careful inspection, or whether it was caused by the subsequent handling of the car, an instruction that the burden rested upon the defendant to prove a proper inspection by a preponderance of the evidence was erroneous and prejudicial to defendant, since, while it was its duty to produce evidence of the inspection, the burden of proof to establish its negligence remained on the plaintiff.

[Ed. Note.—For other cases, see Master and Servant, Cent. Dig. § 902; Dec. Dig. § 265.*]

In Error to the Circuit Court of the United States for the Eastern Division of the Northern District of Illinois.

George W. Kretzinger, for plaintiff in error.

George H. Peaks and Charles G. Neely, for defendant in error.

Before GROSSCUP, BAKER, and KOHLSAAT, Circuit Judges.

GROSSCUP, Circuit Judge. This case was here once before on a writ of error brought by the then plaintiff in error (the plaintiff in the action below) and the judgment reversed for error in instructing the jury to find a verdict in favor of the now plaintiff in error (the defendant in the action below). Davis v. Chicago, I. & L. Ry. Co., 151 Fed. 1008, 81 C. C. A. 286, where the facts will be found fully stated.

The case then turned, as the case now turns, upon a single question of fact, to-wit, whether the defect in the hand hold, from the giving away of which the deceased, Herbert A. Davis, received his injuries, was a defect that was in existence the evening before the accident and when the car was inspected, and was such a defect as a careful inspection would have disclosed, or whether such defect was the result of a handling of the car on the side track between such inspection and the next morning (due to what is technically called "a cornering of the cars"), in that way intervening between the inspection and the time of injury.

On that issue—evidence, circumstantial and direct, being offered pro and con—the Court below instructed the jury as follows (the whole colloquy is given to bring out the full effect of the instruction):

"Mr. Peaks: I have no exception, but I want to suggest to the Court to charge the jury that the burden is upon the company to prove the inspection and to prove contributory negligence.

The Court: I think I should do that.

Mr. Peaks: Now, there is nothing to do as to the burden of proof.

The Court: Yes, I see.

Mr. Peaks: And if they are in doubt as to any of these matters of defense, the company having failed to sustain the burden, then the presumption will be in favor of the plaintiff.

Mr. Smith: Well, I except to that.

The Court: I will state it in a little different way.

Mr. Peaks: But cover the subject.

The Court: I will do that now. Counsel calls my attention to the fact that I have not said anything about the burden of proof, and that is true, I did not.

Now in these cases, in a case like this where the evidence as to the condition of the car is mainly in the possession and control of the defendant company, the burden is upon it to prove that it made an inspection, a fair, reasonable inspection of the car. That is to say, you should be able to find from the more convincing testimony, the greater weight of the evidence, that the inspection was made. Of course, the testimony all comes from the defendant's side. You have what Mr. Johnson said and what Mr. Husband said and the book here which went in evidence on that subject.

Now you should be able to find from the more convincing testimony, that which more reasonably satisfies your judgment than the inference the other way, that the inspection was made.

So, in regard to the question of contributory negligence. You may be in doubt on that question. If you are, you should remember that the burden there also is on the defendant, on the company to show you by the more convincing testimony (not beyond any reasonable doubt at all) but by the more convincing probability of the testimony and evidence in the case that Mr. Davis was guilty of a slight want of ordinary care. That is what is meant by the burden of proof being on the defendant on both of these issues.

(Addressing Counsel) Now, if you want to except, or have any further suggestions to make you will come up here."

and the Court refused the following instruction:

"That, if the jury believe from the evidence that the car was cornered after a proper inspection, then notice of the defect which was caused from the

cornering must be brought to the defendant or must have existed for such a length of time as to charge the defendant with notice of it, before it can be held liable."

asked by plaintiff in error, to the giving and refusing of which instructions, exceptions were duly taken and error is duly assigned.

We are of opinion that in the instructions given, error was committed—not merely a technical mis-direction upon the law of the burden of proof, but a mis-direction that, in the balanced state of the evidence pro and con, may have determined the verdict of the jury. True, when the plaintiff below had proved the condition of the hand hold and the injury resulting therefrom, the duty, or in that sense the "burden," rested upon the defendant below to show that a fair and careful inspection had been made that did not reveal the defect, but this shifting of the source simply from which testimony is to come, is not a shifting of the burden of proof in the sense that upon the contested issue the evidence of the defendant must be more convincing than the evidence of the plaintiff. The jury must consider all of the evidence, with the burden remaining just where it was from the beginning, to wit, that to establish his case, the plaintiff must make out by a preponderance of proof, the negligence set up as the ground of his action. In other words, compliance on the part of the defendant below with its obligation to place before the Court and jury evidence peculiarly within its own knowledge, possession and control, does not devolve on it the duty of persuading the Court and jury that such evidence is more convincing than the evidence that comes from other sources.

The instruction rejected is technically defective—that is to say, it does not submit to the jury the question whether the defect was caused by the cornering, but assumes that as established—but its purpose, doubtless, was to have the jury instructed that if they believed from the evidence that the car was cornered between the time when the inspection took place and when the injury occurred, and that the defect was due to such cornering, notice of such cornering must have been shown to have been brought to defendant before the jury could find that a defect due to such cornering was negligence within the declaration, and thus stated, the instruction ought to have been given. Whether in its defective form, the instruction would be sufficient error to reverse this case, it is not now necessary to decide. We make the foregoing observation in this connection simply as a suggestion to the trial court on a future trial.

The judgment will be reversed and the cause remanded, with instructions to grant the motion for a new trial and to proceed further in accordance with this opinion.

(172 Fed. 864.)

WABASH R. CO. v. UNITED STATES.

(Circuit Court of Appeals, Seventh Circuit. June 23, 1909.)

No. 1,463.

1. RAILROADS (§ 229*)—SAFETY APPLIANCE ACT—COUPLERS ON ENGINES.
A locomotive engine used in interstate commerce need not necessarily have automatic couplers at both ends to comply with Safety Appliance Act March 2, 1893, c. 196, § 2, 27 Stat. 531 (U. S. Comp. St. 1901, p. 3174), where one end only is coupled and intended to be coupled to other cars.
[Ed. Note.—For other cases, see Railroads, Dec. Dig. § 229.*
Duty of railroad companies to furnish safe appliances, see note to Felton v. Bullard, 37 C. C. A. 8.]

2. RAILROADS (§ 229*)—SAFETY APPLIANCE ACT—CONSTRUCTION—DILIGENCE TO COMPLY WITH ACT.
The requirement of Safety Appliance Act March 2, 1893, c. 196, § 2, 27 Stat. 531 (U. S. Comp. St. 1901, p. 3174), that all cars used in moving interstate traffic shall be equipped with automatic couplers coupling by impact, and which can be uncoupled without the necessity of men going between the ends of the cars, is absolute; and it is no defense to an action against a railroad company for its violation by using cars on which the couplers were so out of repair as to necessitate men going between the cars to operate the same that the company used due diligence to keep the couplers in good repair.
[Ed. Note.—For other cases, see Railroads, Dec. Dig. § 229.*]

In Error to the District Court of the United States for the Eastern District of Illinois.

The writ of error is to reverse a judgment entered in favor of the United States for one hundred dollars upon each of four counts of a declaration charging violations of section 2 of the Safety Appliance Act of March 2, 1893 (27 Stat. 531, c. 196 [U. S. Comp. St. 1901, p. 3174]). The specific act of violation charged in the first count is that the coupling and uncoupling apparatus on the "B" end of a certain locomotive engine, and in the second, third and fourth counts respectively, that the coupling and uncoupling apparatus on the "B" end of each of three certain freight cars, all used by plaintiff in error on its line of railroad in the movement of interstate traffic, were out of repair and inoperative to an extent that necessitated men engaged in the coupling and uncoupling of these cars, going between the respective ends of the locomotive and cars in question and those to which they were attached in performance of their duty. The further facts are stated in the opinion.

Edward C. Kramer, for plaintiff in error.
W. E. Trautman and George A. Crow, for the United States.

Before GROSSCUP, BAKER, and KOHLSAAT, Circuit Judges.

GROSSCUP, Circuit Judge (after stating the facts as above). Two questions are raised by the assignments of error that we deem it necessary to dispose of; first, and relating to the conviction on the first count only, was the plaintiff in error entitled to show that the coupling on the B end of the engine was not intended to be used, and, secondly, whether in complying with the provisions of the Safety Appliance Act, proof of a high degree of care and diligence to keep its coupling apparatus in good repair, as required by the Act, would relieve it from liability under the Act as against mere proof by the Government that

the couplers were not in fact in good working order at a given time during the course of an interstate journey.

(1) The first question is raised by the following instruction, offered and refused:

"That if the jury believe from the evidence that the engine No. 516 had originally been equipped with automatic couplers at both the A end and the B end, but that at the time alleged in the first count of the plaintiff's declaration, the lock chain had been disconnected, and the knuckle removed from the coupler at the B end and that thereby the said coupler at the B end of said engine was placed in such a condition that no other car could be coupled to the engine at such B end or uncoupled therefrom either by going between the cars or not, and that the coupler at the A end of such engine was in good condition and that the said coupler at the A end of said engine was the only one used by defendant at the time in question in moving interstate traffic, then the defendant is not liable for the condition of the said coupler at the B end of said engine and you should find the defendant not guilty as to the first count of plaintiff's declaration,"

—and by evidence, excluded by the Court, tending to prove that the coupling on the B end of the engine was not intended to be used—that such coupler had been disconnected and the knuckle taken out, in pursuance of a purpose that it should not be used.

The argument of the Government may be reduced to this syllogism: The Interstate Commerce Act (Act Feb. 4, 1887, c. 104, 24 Stat. 379 [U. S. Comp. St. 1901, p. 3154] amended by Act June 29, 1906, c. 3591, 34 Stat. 584 [U. S. Comp. St. Supp. 1907, p. 892]) requires that every "car" used in moving interstate traffic shall be equipped with "couplers" coupling automatically with impact; the Supreme Court has held in Johnson v. Southern Pacific Company, 196 U. S. 1, 25 Sup. Ct. 158, 49 L. Ed. 363, that a locomotive engine is a car within the meaning of the statute; therefore, locomotive engines must be equipped with "couplers," and inasmuch as "couplers" means more than one coupler, and if more than a coupler on the tender is used the other must be used on the B end of the engine, therefore, an engine unequipped with a coupler at its B end, in accordance with the requirements of the Act, is a violation of the Act.

The difficulty with this reasoning is, first, in the assumption that under the doctrine of the Johnson Case a locomotive and a car are synonymous terms in every respect and for every purpose—a rigidity of construction that the Supreme Court never intended; and the second difficulty is in the assumption that, because couplers, in the statute, is in the plural, there can be no car without a coupler at each end, irrespective of the use to which such car is put. As was said by the Supreme Court in the Johnson Case, the primary object of the act was to promote the public welfare by securing the safety of employees and travelers. Its design to give relief was more dominant than to inflict punishment—a view of the statute that is wholly irreconcilable with a construction that would require the designated couplers to be placed where they were never used or intended to be used.

(2) The second question is raised by the following instruction to the jury, to which exception was duly entered:

"The testimony of the defendant's witnesses was admitted here as to the inspection of those cars, for the purpose of tending to show as far as in your

judgment it does tend to show, that the defendant's cars were in good order. The mere fact that the defendant had used diligence or care to keep those cars in a reasonably safe condition is not a question before you. That is no defense to this suit. This Statute is commanding, and requires the defendant at its peril to keep these couplers in such condition so that the men whose business it is to couple them will not be required to go between the cars to do it; and if you believe from all the evidence in this case that they were so out of order that they could not be coupled without men going between the cars to do the coupling, then the defendant would be guilty under this declaration, and you will so find."

—supported by evidence tending to show that the plaintiff in error had used diligence and care to keep the cars in a reasonably safe condition.

Since this case was brought here and the briefs filed, this question has been disposed of against the contentions of the plaintiff in error in the case of St. Louis, Iron Mountain & Southern Ry. v. Taylor, Administratrix, 210 U. S. 281, 28 Sup. Ct. 616, 52 L. Ed. 1061.

The judgment entered upon the first count of the declaration is hereby reversed. The judgment entered upon the remaining counts is affirmed, and the case is remanded to the District Court with instructions to modify accordingly.

(172 Fed. 866.)

MINNEAPOLIS, ST. P. & S. S. M. RY. CO. v. STEVENSON.

(Circuit Court of Appeals, Eighth Circuit. August 9, 1909.)

No. 2,976.

1. RAILROADS (§ 303*) — CONTRACT FOR PRIVATE CROSSING — DEFECTIVE CONSTRUCTION.

   Where a railroad company contracted with a landowner in securing right of way to build and maintain a safe and adequate crossing on the land for the owner's use, and thereafter made a crossing which remained for a year without alteration, such facts are sufficient to establish that the crossing made was intended as the one required by the contract, and the company is liable for an injury to the landowner resulting from its failure to comply with such contract by making it reasonably safe and adequate.

   [Ed. Note.—For other cases, see Railroads, Cent. Dig. §§ 959–963; Dec. Dig. § 303.*]

2. RAILROADS (§ 350*) — ACTION FOR NEGLIGENT CONSTRUCTION OF PRIVATE CROSSING—QUESTIONS FOR JURY.

   In an action against a railroad company to recover for an injury to plaintiff by reason of the alleged negligence of defendant in constructing a private crossing, the question of defendant's negligence and of plaintiff's contributory negligence *held* properly submitted to the jury under the evidence.

   [Ed. Note.—For other cases, see Railroads, Cent. Dig. §§ 1154, 1168; Dec. Dig. § 350.*]

In Error to the Circuit Court of the United States for the District of North Dakota.

Alfred H. Bright (Ball, Watson, Young & Lawrence, on the brief), for plaintiff in error.

P. J. McClory (Houska & McFarline, on the brief), for defendant in error.

Before HOOK and ADAMS, Circuit Judges, and CARLAND, District Judge.

CARLAND, District Judge. Thomas Stevenson is the owner of the N. E. ¼ of section 4, township 159, range 69, county of Rolette, N. D. The Minneapolis, St. Paul & Sault Ste. Marie Railway Company built its line of railroad across said land in the year 1905. This suit was brought by Stevenson against the railway company to recover damages for personal injuries received by him by reason of a breach of a certain contract, theretofore entered into between Stevenson and the railway company, in regard to the construction and keeping in repair of a private crossing over said railroad on the land above described. The complaint alleged that the railway company had through carelessness and negligence failed to construct and keep in repair a reasonably safe crossing in accordance with its contract; that Stevenson, in attempting to use said crossing on October 23, 1906, received personal injuries which are described in the complaint. The following allegations of the complaint are admitted by the answer of the railway company:

"That the right of way of said defendant's railway over and across said northeast quarter of section four, township one hundred and fifty-nine, range sixty-nine, was granted by said plaintiff to said defendant under a special agreement by said defendant that it would make and keep in good repair one causeway or other safe and adequate means of crossing the same on the northeast quarter of section four, township one hundred fifty-nine, range sixty-nine."

"That during the spring of 1906 the said defendant railway company constructed a crossing over its railway grade and tracks, which said crossing was constructed on the said northeast quarter of section four, township one hundred fifty-nine, range sixty-nine, as a roadway for the use and benefit of said plaintiff and the public under the agreement set forth in paragraph four of this complaint."

At the trial plaintiff recovered a verdict, and the railway company has brought the case here by writ of error.

The only error assigned is that the court erred in overruling the motion made by the defendant at the conclusion of all the evidence in the case for an instruction to the jury to return their verdict in favor of the defendant. The motion referred to simply renewed the motion made by defendant at the close of plaintiff's evidence. The motion made at the close of plaintiff's evidence specified two grounds as a basis for the motion:

First. That the evidence wholly failed to show any negligence on the part of the defendant causing or contributing to plaintiff's injuries.

Second. That the undisputed evidence showed that the plaintiff's injuries resulted wholly, or in part, at least, from his own negligence.

The evidence shows without contradiction that all the railway company did in the construction of a crossing in accordance with its agreement prior to October 23, 1906, was to place planks between the rails of its track on one plank on the outer side of each rail; that on the north side of the track, where said planks were laid, a borrow pit or ditch had been allowed to remain without any filling, except some stone which had been thrown therein by Stevenson. In fact, counsel

for the railway company seek to maintain the position that the railway company had never constructed a crossing, and was therefore not liable for not maintaining it, or that it had constructed it so negligently that a man of ordinary care and prudence would not have used it. We think, however, that the admissions in the pleadings, taken in connection with the fact that this crossing remained in the same condition from November, 1905, to October 23, 1906, so far as anything being done to the same by the company is concerned, establishes the fact that the railway company had constructed all the crossing it intended to. There was abundant evidence to go to the jury on the question of whether the railway company was negligent in the construction or in keeping in repair the crossing in question.

There is evidence in the record that the plaintiff had used this crossing in the fall of 1905, and also during the farming and threshing season of 1906. In 1906 he hauled between 1,400 and 1,500 bushels of wheat over it. The trial court submitted the question to the jury under proper instructions as to whether the crossing was so defective that a man of ordinary care and prudence would not have used the same, and the jury upon that issue found that it was not. There was beyond question sufficient evidence to sustain their finding. The plaintiff brought his action squarely upon his contract, which imposed the same duty upon the railway company, so far as plaintiff is concerned, as if a statute had required the railway company to do the same thing. Gulf, C. & S. F. R. Co. v. Washington, 49 Fed. 347, 1 C. C. A. 286 (Court of Appeals, 8th Circuit).

There being no merit in the errors assigned, the judgment is affirmed.

(172 Fed. 868.)

HOWE v. MERIWETHER.†

(Circuit Court of Appeals, Eighth Circuit. August 9, 1909.)

No. 2,978.

EJECTMENT (§ 50*)—INTERVENTION—PLEADING.

Under Gen. St. Kan. 1905, § 4909, providing that, "when in an action for the recovery of real or personal property any person having an interest in the property applies to be made a party, the court may order it done," it is incumbent on one applying to be made a party to an action of ejectment to plead facts showing that he has a direct and immediate interest in the property, which will be affected by the judgment.

[Ed. Note.—For other cases, see Ejectment, Cent. Dig. § 145; Dec. Dig. § 50.*]

In Error to the Circuit Court of the United States for the District of Kansas.

L. W. Keplinger, for plaintiff in error.
R. E. Ball, for defendant in error.

Before ADAMS, Circuit Judge, and CARLAND, District Judge.

---

† Rehearing denied October 7, 1909.

CARLAND, District Judge. On September 23, 1907, Meriwether commenced an action in ejectment against Henry Black, James Black, Wilda Black, Joseph Turner, and Frances Robinson, in the United States Circuit Court for the District of Kansas, to recover the possession of a certain piece of land located in Wyandotte county, in said state. December 14, 1907, said defendants filed an answer in said cause. June 9, 1908, judgment for the plaintiff was rendered in said action upon stipulation. At the time the motion for judgment was made one S. K. Howe made an application to the court to be substituted as defendant in said action. The motion was denied, and Howe sued out a writ of error.

Section 4909, Gen. St. Kan. 1905, provides as follows:

"When in an action for the recovery of real or personal property any person having an interest in the property applies to be made a party, the court may order it done."

The ruling of the trial court was right. The moving papers disclosed no interest whatever in Howe to the land in dispute. Under the statute quoted, it was not sufficient for Howe to merely allege that he had an interest in the land in controversy; but he was bound to make that interest appear by proper allegations in his petition, so that the court could see that, if the facts stated were true, he had such a direct and immediate interest in the matter in litigation that he would either gain or lose by the direct legal operation and effect of the judgment. Smith v. Gale, 144 U. S. 517, 12 Sup. Ct. 674, 36 L. Ed. 521; Horn v. Water Co., 13 Cal. 69, 73 Am. Dec. 569; Lewis v. Harwood, 28 Minn. 428, 10 N. W. 586; Coffey v. Greenfield, 62 Cal. 602.

Judgment affirmed.

(172 Fed. 869.)

HENNEBIQUE CONST. CO. v. MYERS et al.

(Circuit Court of Appeals, Third Circuit. August 10, 1909.)

No. 46.

1. PATENTS (§ 132*)—TERM—LIMITATION BY TERM OF PRIOR FOREIGN PATENT.

The provisions of Rev. St. § 4887, before its amendment in 1897 (U. S. Comp. St. 1901, p. 3382), that "every patent granted for an invention which has been previously patented in a foreign country shall be so limited as to expire at the same time with the foreign patent," related to matters of substance and not of form merely, applying only where there is a valid foreign patent, and a United States patent for an alleged invention which was covered by a prior certificate of addition to a French patent is not limited to the term of the French patent, where the same was adjudged null and void by the French courts on the ground of anticipation; the effect of such judgment under the law of France being to render the patent, with any certificates of addition thereto, a nullity from the beginning. Buffington, Circuit Judge, dissenting.

[Ed. Note.—For other cases, see Patents, Dec. Dig. § 132.*]

2. TREATIES (§ 11*)—STATUTES—EFFECT OF TREATY.

By the convention concluded at Brussels December 14, 1900, by the International Conference for the Protection of Industrial Property, at which

the United States was represented, it was among other things ordained: "Art. 4 bis. Patents applied for in the different contracting states by persons admitted to the benefit of the convention under the terms of articles 2 and 3 shall be independent of the patents obtained for the same invention in the other states, adherents or nonadherents to the Union. This provision shall apply to patents existing at the time of its going into effect. The same rule applies in the case of adhesion of new states to patents already existing on both sides at the time of the adhesion." This convention was ratified by the Senate March 7, 1901, and proclaimed by the President to go into effect September 14, 1902. 32 Stat. 1936. *Held*, that such treaty was self-executing, and the effect of its ratification was a complete doing away with the interdependence of foreign and domestic patents, and of the limitation imposed on the term of domestic patents for inventions previously patented in foreign countries by Rev. St. § 4887, prior to its amendment in 1897 (U. S. Comp. St. 1901 p. 3382). Per Archbald, District Judge, and Gray, Circuit Judge, concurring.

[Ed. Note.—For other cases, see Treaties, Cent. Dig. § 11; Dec. Dig. § 11.*]

Appeal from the Circuit Court of the United States for the Eastern District of Pennsylvania.

Wm. B. Whitney and John G. Johnson, for appellant.

Arthur Steuart and Drury W. Cooper, for appellees.

Before GRAY and BUFFINGTON, Circuit Judges, and ARCHBALD, District Judge.

GRAY, Circuit Judge. The appellant, as complainant below, on September 16, 1907, filed its bill in the United States Circuit Court for the Eastern District of Pennsylvania, against the defendants, the appellees here, alleging that letters patent of the United States, bearing date the 4th day of October, 1898, and numbered 611,907, had been issued to it for a certain invention, particularly mentioned and described in the specifications attached thereto, which letters patent granted to the complainant the exclusive right to make, use, and vend the same for the term of 17 years from the said 4th day of October, 1898. The bill then charges defendant with infringement of said letters patent, and prays for the usual injunctions, preliminary and final, restraining the said defendants, their agents, servants, etc., from further infringement or violation thereof, and for an accounting.

The defendants, after having filed an answer to the bill, by consent withdrew the same and filed a so-called plea to the jurisdiction of the court, alleging that under the provisions of section 4887 of the Revised Statutes, before its amendment by Act March 3, 1897, c. 391, § 3, 29 Stat. 692 (U. S. Comp. St. 1901, p. 3382), and as applicable thereto, the patent in suit expired August 8, 1907, prior to the filing of the bill of complaint, by reason of the expiration on that date of a French certificate of addition to a French patent, wherein and whereby the invention of the patent in suit had been previously patented by Hennebique in France.

The replication by complainant to the defendants' answer, was allowed to stand as a replication to the plea. The case was heard upon

an agreed statement of facts, which presented two points of law for decision, viz.:

First, whether a certificate of addition to what was in form a regularly issued French patent, but which has been authoritatively and finally adjudged by the French courts to be a nullity and of no effect in law, can limit the term of a later United States patent for the same invention, under section 4887 of the Revised Statutes, before its amendment by the act of March 3, 1897?

Second, whether the said section 4887 has been abrogated by the treaty known as "An Additional Act for the International Protection of Industrial Property" (32 Stat. 1936), in so far as it provided for the limitation by prior foreign patents of the term of a United States patent which was existing at the time the said treaty went into effect?

The court below sustained defendants' plea and directed the dismissal of complainant's bill, without filing an opinion, or otherwise stating the ground of its action.

The agreed statement above referred to brings into the record, by stipulation, all the facts necessary to the determination of the points of law above stated, including the pertinent provisions of the French law and the decisions of the French courts interpreting the same, and applicable to the French patent, and the addition thereto, referred to in the plea, the effect of which plea was to admit also the allegations of the bill of complaint. From the facts thus fully stated, it appears that the patent in suit was issued to Hennebique, October 4, 1898, upon an application filed December 29, 1897, for the full term of 17 years. It also appears that a French patent, No. 223,546, was issued to Hennebique, in 1892, for a term of 15 years from August 8, 1892, and therefore limited to expire on August 8, 1907. The first certificate of addition thereto was issued to said Hennebique in 1893, and a second certificate of addition on April 6, 1898, upon an application therefor filed December 18, 1897. It is also admitted that, by French law, certificates of additions expire with the expiration of the original patent. It also appears that the invention which is the subject of the patent in suit—

"is the same invention which the same inventor, Hennebique, attempted to patent in France, by filing on December 18, 1897, in full compliance with the law of France then in force, the second certificate of addition to his prior French patent, No. 223,546, which said second certificate of addition was issued April 6, 1898, and granted to him such right as could legally result from such patent and certificate."

It is also established, in the stipulated record, that the original French patent and the first certificate of addition have been declared null and void by the French courts. This was first done on March 4, 1903, in an action brought by said Francois Hennebique against certain persons, for the infringement of said French patent, No. 223,546, by the Civil Tribunal of First Instance for the Department of the Seine; then, on an appeal taken by the said Hennebique from the said judgment of March 4, 1903, by the French Court of Appeals, on December 14, 1906, a duly certified copy of the decree of the latter court being embraced as an exhibit in the stipulated record. And again, on July 20, 1905, in an action brought by certain complainants against

said Hennebique, under the provisions of article 34 of the French law of July 5, 1844, for the annulment of said French patent, No. 223,546, and said first certificate of addition of August 7, 1893, the Civil Tribunal of First Instance for the Department of the Seine rendered a judgment referring the cause to a board of experts, to examine and report as to the validity of the said French patent, in view of certain prior French patents, and on appeal taken by the complainants from the said judgment, and on cross-appeal taken by said Hennebique, the French Court of Appeals, on December 14, 1906, rendered a decree, in which they held that the reference to a board of experts was unnecessary, reversed the judgment of the Tribunal of First Instance, and held and adjudged that said French patent, No. 223,546, was null and void, in view of a certain prior French patent, and that said first certificate of addition, of August 7, 1893, was also null and void, since, being only an accessory, it could not exist independently of the principal patent. A duly certified copy of said decree is embraced as an exhibit in the stipulated record. Appeals to the Court of Cassation, taken by the said Hennebique, from the said decree of December 14, 1906, were dismissed in February, 1908.

It further appears, by the stipulated record, that the effect in law of the above judgments and decrees, adjudging the nullity of said French patent, No. 223,546, was to render said certificate of addition thereto, of December 18, 1897, equally null and void, and that, by the French law, there is always this difference between the nullity and the forfeiture of a patent, that the forfeiture only affects the future of the patent, while the nullity affects it in the past as well, and that a patent which is null is a patent which is found never to have had any existence, one which in law never had any reason for existing, while, a patent which has become forfeited, on the other hand, is a patent which had a legal existence up to the time when the cause of forfeiture became a fact.

It follows, then, from the agreed statement of facts, that the French patent of 1892, as thus authoritively and finally adjudged, is and always a nullity, and the certificate of addition thereto, of December 18, 1897, as well as that of 1893, never existed in legal effect, because it could receive no life from the dead patent, upon which it was ingrafted. The question then recurs, can the delivery of such certificate of addition, which was a patent in form only, but which granted no monopoly whatever, because it was null and of no effect in law, be regarded as such a prior patenting of the invention of the patent in suit, as will limit the term of that patent under the provisions of section 4887 of the Revised Statutes? That section reads as follows:

"Sec. 4887. No person shall be debarred from receiving a patent for his invention or discovery, nor shall any patent be declared invalid, by reason of its having been first patented or caused to be patented in a foreign country, unless the same has been introduced into public use in the United States for more than two years prior to the application. But every patent granted for an invention which has been previously patented in a foreign country, shall be so limited as to expire at the same time with the foreign patent," etc.

The French patent law confers exclusive rights, under the conditions set forth, for the invention or discovery of a new industrial prod-

uct, or of a new means or new application of old means for obtaining an industrial result or product. It also provides that patents demanded in due form shall be delivered, without previous examination, at the applicant's own risk, and without guaranty as to either the reality, novelty, or merit of the invention; and it also declares that patents delivered shall be null and void whenever the discovery, invention, or application is not new. And it also gives to all parties having an interest therein, a right of action in civil tribunals of first instance, for the annulment thereof.

It was on the express ground that the alleged invention or device of the French patent here in question was not new that said patent was declared by the French courts to be null and void, and that the letters patent were a nullity. The exclusive privilege which purported to be conveyed by the French patent, and the certificates of addition thereto, never legally existed in contemplation of the French law. There was no monopoly, substantial or otherwise, that could withstand challenge; none that could successfully be asserted against the use by the public of the invention purporting to be patented. The words "foreign patent" and "patented in a foreign country," in section 4887, must be taken to connote matters of substance, and not of mere form, and the French patent and the addition thereto, though regular in form, conferred no such privilege or monopoly as would bring them within the purview of the section referred to. They conveyed to the patentee no substantial rights, and secured to him no valuable monopoly which he could enforce in the courts. Société Anonyme v. Gen. Elec. Co. (C. C.) 97 Fed. 604.

There is nothing on the face of the letters patent to show that it is limited to expire at the same time with a foreign patent which limits its life. All letters patent are issued to a qualified inventor for the full term of 17 years, pursuant to the provisions of section 23 of the patent act of 1870 (Act July 8, 1870, c. 230, 16 Stat. 201). Further provisions of the act, as embodied in section 4887 of the Revised Statutes, providing in effect that, when the patentee has been granted in a foreign country such a valid and substantial exclusive privilege or patent as we have above described, the life of a United States patent will expire with the expiration of such foreign patent. No such condition is shown to exist in relation to the patent in suit. The second certificate of addition, of December 18, 1897, covering the same invention as the patent in suit, is shown to have been, by the French law, as set forth in the stipulated record and as adjudged and decreed by the French court, prior to the filing of this bill, a nullity, and void ab initio. It is impossible to hold, therefore, that the term of the patent in suit is limited by the said second addition to the French patent, and the plea to that effect is without merit.

The view we have thus taken makes it unnecessary to consider the second point of law raised by the appellant, viz., whether the said section 4887 had been abrogated by the treaty known as "an additional act for the international protection of industrial property." But, if it is called for in order to support our judgment, I may say that I

agree with the views on the subject expressed in the concurring opinion of Judge Archbald.

The decree of the court below, therefore, sustaining the defendant's plea and dismissing the bill of complaint, is hereby reversed.

BUFFINGTON, Circuit Judge (dissenting). I cannot concur in the opinion of the court. On August 8, 1892, a French patent No. 223,546, for concrete construction, was granted to Francois Hennebique for 15 years. Five years later Hennebique made another and distinct invention, but of the same general character as his above original patent. Under the French law this second invention could be patented either independently or as a certificate of addition to the original patent. This latter course Hennebique followed, and on April 6, 1898, was granted a certificate of addition (numbered 2) for this new invention, to expire August 8, 1907. Under the French law:

"The certificate of addition has no existence of its own, and follows, in all its vicissitudes, the fate of the principal patent. If, then, the patent becomes forfeited, the certificate falls with it as a matter of law, even though the subject-matter of the certificate was itself both new and patentable."

On December 29, 1897, Hennebique applied for an American patent on the invention covered by his second certificate of addition above described, and on October 4, 1898, the patent in suit, No. 611,907, for this invention, a "construction of joists, girders, and the like," was granted to him. Now, it will be observed this patent was not for the invention covered by Hennebique's original French patent, No. 223,-546, granted in 1892, but, as stipulated in the record (clause 5), for the same invention involved in his second addition granted in 1898. Hennebique's invention having thus, as stipulated, been previously patented abroad, the application became subject to, and the term of his patent fixed by, Rev. St. § 4887, which as then in force had this proviso:

"But every patent granted for an invention which has been previously granted in a foreign country shall be so limited as to expire at the same time with the foreign patent, or if there be more than one, at the same time with the one having the shortest term, and in no case shall it be in force more than seventeen years."

Now, clearly, this statute contemplated that the term for which a patent granted under it ran should be fixed by years when it was issued. The use of the word "term"—"at the same time with the one having the shortest term"—shows that and manifests an intent to fix, by reference to the existing term of the foreign patent, the term granted of the American one. "Id certum est quod certum reddi potest." And the statute has been uniformly construed as granting a predetermined, and not a post-determinable, term. In Henry v. Providence Tool Co., Fed. Cas. No. 6,384, 3 Ban. & A. 501, Mr. Justice Clifford, sitting at circuit, had occasion to consider this act with reference to the question whether the term of the American patent was conclusively fixed when the patent issued. He there said:

"What is the true construction of the act of Congress under which the patent in suit is granted? * * * Congress employs the words 'the foreign patent,' evidently referring to the term of the foreign patent, to define the term of the domestic patent. Had Congress intended to grant a patent for

an indefinite term, or for an uncertain and undefined duration, they would have employed suitable words to express such an intent."

After stating the purposes of the patent law and that the requirements of the specification were meant to fulfill them, he says:

"Adopt the theory of the complainant, and none of these requirements would be of any avail, as none could foreknow whether the term of the patent was for three and not for seven years, or for some indeterminate term of duration, the effect of which would be to make the rights of property in this country depend upon the discretion exercised by a foreign sovereign. Support to that view is derived from the words of the section, which refer not only to the foreign patent, but, if there be more than one, to the one having the shortest term, which, in effect, excludes the theory that the provision in any view can be held to include any subsequent prolongation or extension of the monopoly beyond what was then vested in the foreign patentee. If Congress has intended otherwise, the language would have been different, and words would have been employed to signify that the domestic patent should continue as long as the same invention was protected by the foreign government."

Mr. Justice Clifford's construction of the statute was cited and followed by Mr. Justice Blatchford (then Circuit Judge) in Reissner v. Sharp, Fed. Cas. No. 11,689, 4 Ban. & A. 366, saying:

"But Mr. Justice Clifford held that Congress never intended to extend the term of the United States patent beyond the legal term secured to the foreign patentee when the United States patent was granted, and that no act of a foreign sovereign, nor any act of a foreign legislature, could have the effect to prolong the term of a patent granted here beyond the term prescribed by the act of Congress. Mr. Justice Clifford refers, with force, to the considerations that, as the statute refers not only to the foreign patent, but, if there be more than one, to the one having the shortest term, it cannot be held to include any subsequent prolongation or extension of the monopoly beyond that vested in the foreign patentee at the time of the granting of the United States patent; that, if Congress had intended otherwise, the language would have been different, and words would have been employed to signify that the domestic patent should continue as long as the same invention was protected by the foreign government; and that, under the opposite rule, neither the authorities of the United States, nor inventors, nor the public would ever be able to know what the patentee acquired under a patent granted by the United States, in a case where the invention had been previously patented in a foreign country."

That Rev. St. § 4887, fixed unchangeably the term of the American patent was the view of Mr. Justice Bradley, who in Bate Refrigerating Co. v. Gillett (C. C.) 31 Fed. 815, says:

"The term of the English patent fixed the term of the American patent, nothing more, nothing less. The subsequent fate of the English patent had no effect upon the American. The life of each after its inception proceeded independently of the life of the other. See Protective Co. v. Burglar Alarm Co. (C. C.) 21 Fed. 458; Paillard v. Bruno (C. C.) 29 Fed. 864."

In the case cited from 21 Fed. 458, Judge Wheeler said:

"The statute merely required that in such case [that is, where there is a prior foreign patent] the patent shall be so limited as to expire at the same time with the foreign patent. Rev. St. § 4887. This seems to mean that the term of the patent shall be as long as the remainder of the term for which the patent was granted there, without reference to incidents occurring after the grant. Henry v. Providence Tool Co., Fed. Cas. No. 6,384, 3 Ban. & A. 501; Reissner v. Sharp, 16 Blatchf. 383, Fed. Cas. No. 11,689. It refers to fixing the term, not to keeping the foreign patent in force."

And in Paillard v. Bruno, supra, Judge Wallace held:

"According to the construction thus placed upon the section, it should be read as though it declared that the United States patent is to expire at the same time with the term of the foreign patent previously obtained for the same invention, or, if there be more than one, at the same time with the one having the shortest term. Upon this construction the duration of the term of the United States patent fixed when the patent issues, according to the maxim, 'Id certum est quod certum reddi potest.' Under any other construction, neither the Commissioner of Patents, nor the patentee, nor the public would know the duration of the grant. The term of a patent is the period of duration expressed in the grant. It may be terminated by operation of law, or by the act of the parties, at an earlier time; and consequently it might happen that of two patents the one having the shortest term may have the longest life."

So, also, Judge Simonton, in Bonsack v. Smith (C. C.) 70 Fed. 392, held:

"In construing this section, the meaning of the words 'expire' and 'term' is controlling. Section 4887 makes the American patent 'expire' at the same time with the foreign patent, or, if there be more than one, at the same time with the one having the shortest 'term.' The Supreme Court of the United States, in one of the few cases on this point, construe this word 'expire' to mean cease to exist because of the termination of the duration of the original grant, and not to mean cease or determine by reason of some penalty or forfeiture for the nonperformance of some condition subsequent. Pohl v. Brewing Co., 134 U. S. 381, 10 Sup. Ct. 577, 33 L. Ed. 953."

To me it is clear that, as said above, the words "expire" and "term" are the controlling words of the statute, and that the word "expire" means an expiration by lapse of the time of the term. The words "so limited as to expire at the same time with the foreign patent" are equivalent to reading "so limited as to expire at the same time with [the expiration of the term of] the foreign patent"; or, in other words, "expire" refers solely to an ending at the end of the term by the passage of time. And that this is the proper construction of the section is apparent from what was said in Pohl v. Brewing Company, supra. It is true the question there before the court was the alleged lapsing of the domestic patent by the subsequent forfeiture of the limiting foreign one. But in deciding that question it was held that no such lapse took place, because there was nothing in the statute to limit the duration of the domestic patent, save the duration of the legal term of the foreign patent in force at the time. Thus it is said:

"There is nothing in the statute which admits of the view that the duration of the United States patent is to be limited by anything but the duration of the legal term of the foreign patent in force at the time of the issuing of the United States patent, or that it is limited by any lapsing or forfeiture of any portion of the term of such foreign patent, by means of the operation of a condition subsequent, according to the foreign statute. In saying that 'every patent granted for an invention which has been previously patented in a foreign country shall be so limited as to expire at the same time with the foreign patent,' the statute manifestly assumes that the patent previously granted in a foreign country is one granted for a definite term; and its meaning is that the United States patent shall be so limited as to expire at the same time with such term of the foreign patent. * * * In the view that section 4887 is to be read as if it said that the United States patent is to be so limited as to expire at the same time with the expiration of the term of the foreign patent, or, if there be more than one, at the same time with the expira-

tion of the term of the one having the shortest term, the interpretation we have given to it is in harmony with the interpretation of the words 'expiration of term' in analogous cases. Oakley v. Schoonmaker, 15 Wend. (N. Y.) 226; Beach v. Nixon, 9 N. Y. 35; Farnum v. Platt, 8 Pick. (Mass.) 339, 19 Am. Dec. 330. In those cases it was held that the words 'expiration of term' do not mean expiration of term through a forfeiture by breach of a condition, but mean expiration by lapse of time."

And the case of Oakley v. Schoonmaker, supra, which is thus approved, brings out very clearly that the expiration of the term is an expiration at its time limit, saying:

"The landlord cannot avail himself of the tenant's violation of his agreement as to cutting wood, if that were an act which would work a forfeiture. That is not the expiration of the time referred to in the 1st subdivision of the twenty-eighth section. The statute means expiration by lapse of time."

These cases constrain us to hold that when the American patent was granted to Hennebique, there then being a prior French patent to him which expired on August 8, 1907, the American patent was unchangeably fixed to expire on that day. Such became the contract between him and the government, and thereby the latter contracted to give Hennebique a monopoly of his invention until August 8, 1907. Such were the terms of the grant, and under all the foregoing cases such would have been the construction placed by them on that contract. Now, as the stipulation concedes the identity of the two inventions, Rev. St. § 4887, applies, and it necessarily follows that, if that contract is to be reformed or modified, it must be so because the statute so provides. But the statute nowhere so provides.

It is said, however, in the majority opinion, that when the words "foreign patent" were used in the statute Congress in effect meant a valid foreign patent and one that on legal test should be adjudged valid. The simple answer to such a contention is that the act nowhere so says. By its silence it made no criterion of the void, voidable; or forfeiture character of the foreign patent, and the only feature thereof it does, by reference, adopt is its length of term, and where there is more than one patent it takes the shortest as embodying the contract it makes with the foreign inventor. The intent of the statute is manifest. Finding an outstanding monopoly granted by a foreign government for the same invention, it contracted to grant a domestic monopoly for that term. It simply inquired whether this invention "has been previously granted in a foreign country." Whether the patent was void or voidable, forfeitable or not, was not provided for by the statute. Length of term was the only test, or, as Justice Bradley put it in his direct, forcible words:

"The term of the English (foreign) patent fixes the term of the American patent, nothing more, nothing less."

That is the plain meaning of the words. There is no ground for construction or the interjection of supposed intent. By the use of apt words of reference to the term of the foreign patent as a measure of time, and by its omission to refer to the terminable character of such foreign patent, Congress has made the then existing foreign time term the sole pertinent factor to fix the future time of the domestic

patent. This, I submit, is in view with what was said in Bate v. Sulzberger, 157 U. S. 37, 15 Sup. Ct. 516, 39 L. Ed. 601:

"Congress, in effect, by the existing law, says to an inventor seeking to enjoy the exclusive use in this country of his invention for the full term prescribed by law: 'If your invention has not been introduced into public use in the United States for more than two years, you may, upon complying with the conditions prescribed, obtain an American patent, and you may, if you can, obtain a foreign patent. But the American patent will be granted on the condition that, if you obtain the foreign patent first, your invention shall be free to the American people whenever, by reason of the expiration of the foreign patent, it becomes free to people abroad; but in no case shall the term of the American patent exceed seventeen years.' This we deem to be a sound interpretation of the statute, giving to the words used the meaning required by their ordinary signification. In our judgment the language used is so plain and unambiguous that refusal to recognize its natural, obvious meaning would be justly regarded as indicating a purpose to change the law by judicial action based upon some supposed policy of Congress."

On March 4, 1903, the original patent of Hennebique was, in a suit in the French courts, adjudged to have been anticipated by an earlier patent to Monier, and was therefore null and void, and in appeals to higher courts that decision was finally affirmed in February, 1908. In this litigation the Hennebique second addition was neither mentioned nor made the subject of decree; but under the French law quoted such second addition fell, not because it did not involve invention, but because the original patent on which it was ingrafted had been annulled. The opinion of this court now holds that the effect of this annulment of the French patent in a proceeding begun after the American patent had issued was the same as if no foreign patent existed when Hennebique's American patent was granted, and therefore Rev. St. § 4887 does not apply. The practical effect of this construction is that a statute which was intended (see Mushet's Case, Commissioner of Patents' Decisions, p. 105, approved in Huber v. Nelson, 148 U. S. 275, 13 Sup. Ct. 603, 37 L. Ed. 447) to place the American public on a parity with foreign countries with relation to foreign inventions by releasing the American monopoly as soon as it was released abroad is made to so operate that the release of the monopoly abroad, instead of releasing it here, actually extends it eight years longer than would have been the case had no steps been taken to release it abroad. And that this radical change in his patent was brought about in a suit honestly instituted by Hennebique himself still shows the grave dangers to which the patent system is subject, when the future of an American patent is not a matter of contract right, but one dependent upon the action of one of the parties to it. A result so at variance with the reason and spirit of the law is not to be imputed to Congress. It tends to unsettle rights, for when this patent was issued the public had a right to assume that 1907 was the limit of Hennebique's American patent. His French patent was then in force. The French law provided with reference to such patent:

"This right is established by deeds delivered by the government under the name of patents of invention."

No step has been taken to annul it. It was on this status in France that Hennebique's American patent was granted in 1898, to expire in

1907. That the annulment of that French patent, begun three years later, should in any way affect the American patent, much less that it should extend its monopoly eight years, is a proposition whose statement seems to me its answer.

ARCHBALD, District Judge (concurring). I concur in the view that the act of Congress, in limiting a patent in this country by the term of one previously granted for the same invention abroad (Rev. St. § 4887), presupposes that the foreign patent is valid, and, where this proves not to be the case, that the patent here continues for the full term of 17 years which it would otherwise enjoy. I do not agree that the term of the patent abroad is written into and becomes the term of the patent here, regardless of whether such foreign patent is inherently good or bad. The purpose of the law is manifestly to limit the monopoly secured by the patenting of the invention, so that it shall come to an end, and the invention be free for the benefit of citizens of this country, when it becomes free in the country where it was first patented and protected. But where there never was a valid patent there, and except in name the invention was not thus in fact protected, the reason for the law disappears, and with it the application. Société Anonyme v. General Electric Company (C. C.) 97 Fed. 604. The case is not to be identified or confused with that of a foreign patent, which, after having been granted for a definite term, lapses or becomes forfeited by force of a condition subsequent, as for nonworking, or the failure to pay a renewal fee. Pohl v. Anchor Brewing Company, 134 U. S. 381, 10 Sup. Ct. 577, 33 L. Ed. 953; Leeds & Catlin v. Victor Talking Machine, 213 U. S. 301, 29 Sup. Ct. 495, 53 L. Ed. 805. The foreign patent, in a case of that kind, having issued for a definite term, and the domestic patent being limited by it, the term so fixed at the beginning is held to continue, without regard to what may so subsequently happen; the life of each, after its inception, proceeding independently of the other. Bate Refrigerating Company v. Gillett (C. C.) 31 Fed. 809. But the lapse or forfeiture of a foreign patent short of the term for which it was originally granted is quite different from its being judicially determined never to have had any validity or life at all. And the effect of getting rid of it in this way, by which a domestic patent for the same invention is left free to enjoy to the full the term to which under our laws it would normally be entitled, is not to be likened to the cutting down or shortening of the term of the patent abroad, by what has incidentally come about with regard to it afterwards. The one is an attempt to reduce or abridge the original grant. The other merely clears the way for the assertion of that which, rightly considered, the patent is to be regarded as having possessed from the beginning. It is true that it is all one if, good or bad, and for all purposes, the term of the foreign patent is the term of the domestic one. But that is not the logic of the situation. It cannot be that Congress intended to limit the patent here by a patent abroad that was absolutely good for nothing. As declared by this court in Atlas Glass Company v. Simonds Manufacturing Company, 102 Fed. 647, 42 C. C. A. 558, the words "previously patented in a foreign country," as found in the section of the Revised Statutes referred to, must be taken to mean "patented

according to the laws and usages of such foreign country, provided a substantial monopoly is thereby granted." And this cannot be affirmed where for any reason such patent, as here, is inherently invalid.

In view, however, of the differences between the members of the court over this question, the effect of the treaty of Brussels, in my judgment, requires attention. The decree below certainly cannot be affirmed without first considering it. By the convention concluded at Brussels December 14, 1900, by the International Conference for the Protection of Industrial Property, at which the United States was represented, it was, among other things, ordained:

"Art. 4 bis. Patents applied for in the different contracting states by persons admitted to the benefit of the convention under the terms of articles 2 and 3 shall be independent of the patents obtained for the same invention in the other states, adherents or nonadherents to the union. This provision shall apply to patents existing at the time of its going into effect. The same rule applies in the case of adhesion of new states to patents already existing on both sides at the time of the adhesion."

This convention was additional to that similarly concluded at Paris March 20, 1883, to which the United States was not originally a party, but subsequently gave its adherence, and was ratified by the Senate March 7, 1901, and proclaimed by the President, August 25, 1902, to go into effect September 14 following. 32 Stat. 1936. Taken as it reads, it provides for the absolute independence of previously interdependent domestic and foreign patents; and if self-executing, and not otherwise controlled, it relieves the patent in suit from the effect of the French patent to which reference has been made, whether valid or invalid.

It appears, however, that, at the first session of the same conference, in December, 1897, after the article in question had been formulated, Mr. Forbes, one of the delegates on the part of the United States, pointed out that, as it stood, it would apparently apply to patents existing at the time it was put in force, and that this would be contrary to [the spirit of] our laws, which do not permit of a retroactive effect being given them. He explained that the law in the United States with regard to the interdependence of domestic and foreign patents had been modified (evidently referring to Act March 3, 1897, amending Rev. St. § 4887 [U. S. Comp. St. 1901, p. 3382]), whereby the provision had been eliminated that the term of a patent here for an invention previously patented abroad should be limited to expire at the same time with it, but that this interdependence was retained as to patents delivered prior to January 1, 1898, their terms being fixed at the time of their issue, and that if article 4 bis was interpreted as extending to patents already issued, as it possibly might be, it would run counter to the principle of nonretroactivity with which our laws are inspired. To avoid the objection which might be raised by the United States upon this score, he inquired whether article 4 bis could not be made the subject of a special protocol. After a discussion of the subject by several delegates, in the course of which it was suggested by Mr. Morel, director of the International Bureau, that the article, while made to apply to existing patents, should be expressly limited in its effects to nullities and lapses subsequently occurring, it was propos-

ed by Mr. Bellamy Storer, another of our representatives, that a proviso should be added: "However, the term fixed by the internal law of each country remains intact;" it being explained by him that this would only apply to patents in existence at the time the article went into force, the effect of which would be that patents delivered in the United States up to December 31, 1897 (the date to which the interdependence of foreign and domestic patents was preserved by the act of March 3, 1897), would be limited by the normal term of patents previously issued for the same invention, the same as they were by the existing law. It was not deemed advisable by the conference, however, to make any changes in the text of the article, either that submitted by Mr. Storer or that suggested by Mr. Morel, but that it should receive, instead, the interpretation which the American delegation desired, and, with this understanding entered on the minutes, the article was finally adopted. That there may be no question as to this being a correct summary of the proceedings, they are produced in full in the margin.[1]

If this were all, it might perhaps be a question whether the construction so impressed on the article by common consent at the time of its adoption would not have to be respected, in accordance with which it would be restricted, so as not to interfere with or disturb the terms of patents issued or applied for in the United States up to December 31, 1897, which would be left as they stood by the existing law. And, in conformity with this, the patent in suit, having been applied

[1] December 13, 1897.

The new article relative to the reciprocal independence of patents is unanimously agreed to. This article which bears No. 4 bis, is expressed in the following terms:

"Art. 4 bis: Patents applied for in the various contracting states by persons admitted to the benefits of the convention under the terms of articles 2 and 3 shall be independent of patents obtained for the same invention in the other states, whether adhering to the union or not.

"This provision shall apply to patents in existence at the time of its being put in force.

"The same thing shall apply in the event of the accession of new states, to patents existing on either side at the time of accession."

* * * * * * * * * * * *

December, 14, 1897.

In regard to article 4 bis relating to the reciprocal independence of patents, Mr. Francis Forbes, delegate from the United States, makes the following remarks:

"According to the second paragraph the new order would apply 'to patents existing at the time of its being put into force.' Now, in the United States the law cannot have a retroactive effect. The stipulation in question would therefore receive objections on the part of the American government, objections of such a nature as to retard the signing of the additional act."

Desiring to avoid this eventuality, Mr. Forbes inquires if article 4 bis could not be made the subject of a special protocol. The president consulted the conference on this question, in order to learn if it was agreeable to the conference to modify the text submitted for the signature of the delegates, or whether it would be sufficient to mention in the minutes the reservation made by the delegate from the United States.

Mr. Francis Forbes would readily accept the arrangement if it be clearly understood that it should not have a retroactive effect in his country. He explains that the law of the United States has been modified in relation to reciprocal independence. Patents delivered prior to January 1, 1898, however,

for two days before the change, introduced by the act of March 3, 1897, went into force, would be excepted out of the effect of the article, being limited by the French patent previously granted which is now brought forward, provided, of course, that that is the effect of it, valid or invalid.

It is to be noted, however, that, although a report of the work of the conference was made by our delegates, it was not ratified. But a second session having been held in December, 1900, and the subject having again come up, article 4 bis was adopted, with others, in the exact form in which it had before been agreed to; and the treaty, of which it was a part, having been submitted to our government, was ratified by the Senate and proclaimed by the President, as already stated. The question now is whether it is to be taken as it reads, or

remain dependent, so far as their term is concerned, upon the corresponding foreign patent taken out for the same invention; their term being fixed at the time of their deliverance. Now, it might happen that article 4 bis would be interpreted as meaning that all patents issued before the coming into force of the new law should extend during their entire term of 17 years, while from the moment of their issuance these patents ought to be considered as limited in duration by the patents delivered at an anterior date. This interpretation could only be admitted in the United States by means of a special law, which would be contrary to the principle of nonretroactivity with which all American legislation is inspired.

* * * * * * * * * * *

Mr. Dubois, delegate from Belgium, is of the opinion that article 4 bis is designed only to produce effects after the patent has been issued, and consequently it is not contrary to the American law. It is really not the purpose to retroactively modify the normal term of the patent, which remains such as it was fixed by the law in force at the time of its issuance.

* * * * * * * * * * *

Mr. Francis Forbes insists on the necessity of stating this point very precisely, in order to avoid errors of interpretation, which would have very regrettable consequences, in case of the acceptance of the additional act by the United States.

* * * * * * * * * * *

Mr. Morel, director of the International Bureau, calls attention to the object aimed at by the conference in voting article 4 bis. He believes that satisfaction might be given to Mr. Forbes by introducing a condition in the second paragraph of this article, excepting very explicitly incidents which are anterior to its being put into force. He suggests for this paragraph the following amendment:

"This provision shall apply to patents in existence at the time of its being put into force. Its effects are, however, limited to nullities and lapses which would affect anterior patents."

* * * * * * * * * * *

Mr. Michel Pelletier, delegate from France, remarks that, the reciprocal principle of independence being admitted, it is not advisable to restrict same by new provisions.

* * * * * * * * * * *

Mr. Dubois gives his opinion as to the situation which will result from the article 4 bis. This establishes the principle of independence as to incidents, notably lapses and nullities, which may occur after the issuance of the patents; but the internal law can freely fix the normal duration of the patent taken out in the country.

* * * * * * * * * * *

Mr. Michel Pelletier also expresses the opinion that the independence has the precise effect of suppressing all relations between the various patents,

whether it is to be qualified by the understanding at the time it was adopted at the first session of the conference.

There is no better example of the uncertainty introduced, when parol evidence is resorted to, to control the effect of a written instrument, than is afforded in the present instance. By the plain terms of the article foreign and domestic patents are rendered independent, and this provision is expressly made to apply to existing patents without any apparent restriction or qualification; complete independence being substituted for the previous interdependence by which up to that time they had been hampered. The objection raised to this by the delegates from the United States, as we have seen, was that it might be held to operate retroactively, and in that way enlarge the term of existing patents, which would otherwise be restricted by the limitations

and leaves to each national law the care of regulating all matters pertaining to patents taken out in the country.

* * * * * * * * * * * *

His Excellency, Mr. Bellamy Storer, delegate from the United States, asks if the following words could not be added:

"However, the term fixed by the internal law of each country remains intact."

This addition would, of course, only apply to such patents as exist at the time of the coming into force of the additional act. Its bearing in the United States would be: The patents delivered under the rules of the existing law—that is, until December 31, 1897—would be limited by the normal duration of foreign patents of an anterior date, issued to the same inventor for the same invention. Their duration would then remain as it was at the moment of the coming into effect of the existing law.

The president proposes to leave the text of article 4 bis without any change, and to state in the minutes of the meeting that this article should receive the interpretation which has just been indicated. The American delegation would thus obtain complete satisfaction.

* * * * * * * * * * * *

His Excellency, Mr. Bellamy Storer, declares this combination acceptable, if it meets with the unanimous adhesion of the conference.

* * * * * * * * * * * *

Count Hamilton, delegate from Sweden, pronounces himself in favor of an addition to article 4 bis in the sense as indicated by Mr. Morel.

* * * * * * * * * * * *

The Very Honorable C. B. Stuart Wortley, delegate from Great Britain, remarks that it is important, in the examination of the question, to take into consideration article 2 of the general convention, which guarantees to those under the jurisdiction of the contracting states, the benefit granted in each country to natives thereof. The subjects of Great Britain have then for their patents in the United States a right of protection for a period of 17 years according to the American law.

* * * * * * * * * * * *

Mr. De Ro, delegate from Belgium, supports the proposition of the president, to record in the minutes the harmony existing in the convention as to the effect of article 4 bis, to which proposition His Excellency, Mr. Storer, has kindly acceded.

* * * * * * * * * * * *

The president puts to a vote the adoption of the text previously adopted for article 4 bis, with the interpretation which the American delegation desire to specifically point out by proposing to complete the second paragraph by supplementing this explanatory clause:

"However, the term fixed by the internal law of each country remains intact."

Article 4 bis is definitely adopted with these conditions.

imposed by the law as it stood at the time they were granted. In the course of the discussion which followed it was suggested by other delegates that this could be met and disposed of by confining the effect of the provision to nullities and lapses, establishing the principle, as it was said, of independence as to incidents occurring afterwards. But this did not meet with favor. And it was finally agreed that the article should be adopted as it had been formulated, with the interpretation desired by the United States delegates, entered on the minutes, to qualify it, that "the term fixed by the internal law of each country remains intact"—meaning, in the light of the context, that the article was not to be retroactive, but that existing patents were to continue to have the limited term imposed upon them at the time they were granted by the term of a foreign patent previously obtained for the same invention. And yet we have the delegates from this country, when they came to make their report, stating that:

"It was the unanimous sense of the conference that the paragraph was not applicable to existing United States patents, but only to those patents whose terms might be shortened by the laws of those states of the union in which provision is made for a shortening of the term on the lapsing of patents for the same inventions in other states."

Or, as it is further explained, that the duration of a patent here, being determined by the state of the law at the time it was granted, "is unaffected by the subsequent expiration of a foreign patent for the same invention by reason of nonpayment of taxes or nonworking." But this is exactly what the conference did not agree to, if I understand the proceedings. Indeed, if the only independence proposed by the article was as to lapses and forfeitures of previous patents for the same invention in other countries, the objection made by our delegates, as well as the resulting discussion and the amendments proposed to overcome it, were without point and meaningless; it being well settled, as must have been known to them, that, under section 4887, patents in the United States are only limited by the normal term of foreign patents, and that the lapsing or falling in of the latter for nonpayment of renewal fees or similar incidents have no effect on the term of a subsequent patent for the same invention here. Pohl v. Anchor Brewing Company, 134 U. S. 381, 10 Sup. Ct. 577, 33 L. Ed. 953. Bate Refrigerating Company v. Sulzberger, 157 U. S. 1, 15 Sup. Ct. 508, 39 L. Ed. 601.

Assuming, then, that we were at liberty to go outside of the article as it stands, which interpretation of it is to be taken—that reported by our delegates (which is the only one, by the way, that was likely to have been brought to the Senate, so as to influence it in ratifying, if that is of any consequence), as to the incorrectness of which there can be no question, or that derived from the minutes of the proceedings, as they appear in the journal of the conference, which alone can be regarded as having been carried forward into the result of the succeeding session, which is insisted on? It may be that either view favors the defendant. But that is not the question. The article must not be open by parol to a double construction, and that one must be adopted which will apply to all cases, not only in this country, but elsewhere. While the action of the conference was taken at the instance of the

delegates from the United States to answer the objection that, contrary to the spirit of our laws, the article might be held to be retroactive, the explanation accompanying its adoption was not limited to patents here, but was of general application affecting all the states represented at the conference who might ratify it; and this dilemma might arise in consequence: That other states, relying on the minutes of the proceedings, would interpret the article one way, while the United States, under the lead of our delegates, would take it another, resulting in serious confusion and conflict. And that this is by no means an impossible situation, we find it declared by the French government, as the reason for ratifying it, that all the inconveniences, arising from the reciprocal dependence of patents taken out in different countries, are made to disappear by the article in question, the effect of it being to suppress all connection between such patents, leaving to the law of each state the regulation of the terms of patents taken out in that country; a view, quite aside, as it will be noted, from that suggested in the report of our delegation. And the Italian Ministry of Agriculture, Industry, and Commerce, in May, 1903, being called on to make a deliverance upon the subject, while conceding that it was for the judiciary to determine the subject finally, as a matter of executive guidance in case of the demand for the patenting of an imported invention patented abroad, or of a claim of priority based on the filing there of an earlier application, also recognized that article 4 bis was in derogation of the existing statute law of Italy, which, the same as in the United States, limited the term of a domestic patent by the term of a patent for the same invention taken out before that in a foreign country; and that patents, thereafter applied for, should therefore be allowed the full term of 15 years, provided by law, notwithstanding that the invention had been made public by the previous granting of a foreign patent for it, although applications for a patent of importation, resting on other principles and not being provided for by the conference, were in a different position.

But we are relieved from the necessity of going into this subject further. As already stated, there was no ratification of the action of the 1897 conference, and it cannot be successfully maintained that, without any mention of, or reference to, it, what occurred at it was carried forward into the session of 1900 and written into article 4 bis as there adopted without qualification or objection. Upon being ratified by the states participating in the conference, in the form in which it was so cast, it became the treaty law between them, mutually governing their citizens and subjects, to be interpreted according to the terms in which it was couched, unaffected by any reservation or explanatory restriction not expressed in it. A treaty is a contract, and is to be so construed as to carry out the apparent intention of the parties as disclosed by its terms. Geofroy v. Riggs, 133 U. S. 258, 10 Sup. Ct. 295, 33 L. Ed. 642. Where the words convey a definite meaning, and there is no contradiction between the different parts of it, the meaning deduced from the face of the instrument is the one to be taken, and courts are not at liberty to add to or detract from it. Or, in other words, the meaning is to be ascertained by the same rules of construction and course of reasoning as are applied to the interpretation of

private contracts. 28 Am. & Eng. Ency. Law (2d Ed.) 488; Tucker v. Alexandroff, 183 U. S. 424, 437, 22 Sup. Ct. 195, 46 L. Ed. 264. With due deference, therefore, to the apparent position to the contrary taken at the first session of the Brussels Conference, it is not to be thought of that a treaty ratified and confirmed by the participating powers in a definite and unambiguous form can be limited or qualified by a resolution passed at a preliminary conference, which is not by reference or otherwise incorporated into or made a part of its terms, so as to be submitted to the different countries called upon to consider and ratify it. Where qualifications are found necessary, after a treaty has been formulated, if the text is not changed, they are brought in by way of explanatory protocols at the end, as is shown by the treaty of 1883 in question, where a number of them will be found. And this may have been what Mr. Forbes had in mind, when he proposed a special protocol against article 4 bis being given a retroactive effect. And, had this course been pursued, it would have removed all difficulty. But unfortunately it was not. And a mere resolution on the minutes of the conference cannot be held to take its place.

There is nothing in Doe v. Braden, 16 How. 635, 14 L. Ed. 1090, which is counter to this. In that case the treaty with Spain, by which Florida was ceded to the United States, was under consideration; and it appeared that, subsequent to its negotiation and after the terms had been agreed on, the Secretary of State requested and received an admission from the Spanish Minister that certain grants of land by Spain in Florida should be annulled, and this was annexed to the treaty at the time of its ratification and promulgated with it, and it was held that it was as obligatory as if inserted in the treaty itself. "It is too plain for argument," as it is said, "that when one of the parties to a treaty, at the time of its ratification, annexes a written declaration, explaining ambiguous language in the instrument, or adding a new and distinct stipulation, and a treaty is afterwards ratified by the other party with the declaration attached to it, and the ratifications duly exchanged, the declaration thus annexed is a part of the treaty, and as binding and obligatory as if inserted in the body of the instrument." But there is nothing of that kind here. So in Kinkead v. United States, 150 U. S. 483, 14 Sup. Ct. 172, 37 L. Ed. 1152, the correspondence between the Secretary of State and the Russian Minister, with respect to the terms of the sixth article of the treaty by which Alaska was taken over was accepted as explaining the meaning of certain expressions in that article, but not, however, to control the scope of it. The case of New York Indians v. United States, 170 U. S. 1, 18 Sup. Ct. 531, 42 L. Ed. 927, is much more in point; it being there held that a qualifying provision, passed by the Senate at the time of the confirming of a treaty with certain Indian tribes, compliance with which was made an express condition of the treaty going into force, was of no effect to modify it, as it was promulgated by the President, in which no allusion to the provision was made.

Without further discussion, therefore, it is clear that article 4 bis, having been duly ratified by the different states represented in the conference in the form in which it now appears, must be taken as it reads, according to which the dependence of domestic on foreign patents for

the same invention, previously granted abroad, is entirely removed and done away with. And this is to be interpreted liberally. As resolved by the Convention of Turin, in September, 1902, a few days after the treaty went into effect in the United States:

"The independence of patents proclaimed by the additional act of Brussels ought to be construed in the broadest terms, and particularly in such manner that the term of a patent shall not in any case be dependent upon the term of another patent."

Nor is this to be confined, as conceived by our delegates, to such subsequent incidents as nullities and lapses by reason of the nonpayment of renewal fees or nonworking; an attempt to so limit it having been expressly disapproved by the conference. And, it having been in terms provided that the article should "apply to patents in existence at the time of its being put in force," subsisting patents, including the one in suit, were freed from their previous dependency, equally with those granted afterwards; no saving distinction being made between them.

The article must also be regarded as self-executing. A contrary opinion was given by the Attorney General as to the treaty of 1883. 19 Opinions, 275. And this was followed by the Patent Office, as the correct construction, afterwards. Ex parte Zwack & Co., 76 O. G. 1855; Butterworth v. Boral, 97 O. G. 1596. It was accepted, also, by the Court of Appeals of the District of Columbia in interference proceedings, carried up from the Commissioner of Patents. Parker v. Appert, 75 O. G. 1201; Rousseau v. Brown, 104 O. G. 1120. In United Shoe Company v. Duplessis Shoe Company, 155 Fed. 842, 84 C. C. A. 76, also, it was held by the Court of Appeals of the First Circuit, that, although article 4 bis on its face was self-executing, it was controlled by implication by the passage by Congress of Act March 3, 1903, c. 1019, 32 Stat. 1225 (U. S. Comp. St. Supp. 1907, p. 1003), to give effect to it. But neither of these views in my judgment can be sustained. Having respect to their terms, it cannot be said that either the treaty of 1883 or the additional act of 1900 required legislation here to make it effective. They both undertake in the most direct and positive way to say what shall and what shall not be as to the matters with which they deal, and, being ratified in that form, nothing further, by our laws, was necessary to put them into operation. They cannot be treated as mere agreements by the high contracting parties to bring the domestic laws of each into conformity with them by subsequent action. That resulted by virtue of their own force and vigor.

A treaty is a law of the land, as an act of Congress is, whenever its provisions prescribe a rule by which the rights of the private citizen or subject may be determined. Head Money Cases, 112 U. S. 580, 598, 5 Sup. Ct. 247, 28 L. Ed. 798. By article 2 of the treaty of 1883, the subjects or citizens of each of the contracting states shall enjoy, in all other states of the union, so far as concerns patents for inventions, etc., the advantages that the respective laws thereof then or shall afterwards accord to their own citizens or subjects, in consequence of which they shall have the same protection as the latter and the same legal recourse against all infringements of their rights, upon condition of complying with the formalities imposed upon citizens or subjects. And by article 3 subjects or citizens of states not forming

part of the union, who are domiciled or have [bona fide, according to the additional act of 1900] industrial or commercial establishments in the territory of one of the states of the union, are assimilated in this respect to actual subjects or citizens. By article 4 any one who shall have regularly deposited an application for a patent of invention, etc., in one of the contracting states shall enjoy, for the purpose of making a deposit in other states and under reserve of the rights of third parties, a right of priority during the periods thereinafter mentioned; that is to say, four months in case of designs, and six months (made twelve by article 4 of the additional act) for general inventions. By article 5 the introduction by the patentee into countries where the patent has been granted of articles manufactured in any other of the states of the union shall not entail a forfeiture; subject, however, to the obligation of the patentee to work his patent, conformably to the laws of the country. And so on, in practically every article; the same being true, also, of the different articles of the additional act, including article 4 bis, by which the independence of foreign and domestic patents is declared and made to apply to those in existence.

It is idle to suggest, in the face of these provisions and others of like character that could be quoted, that the treaty, as well as the additional act by which it was supplemented, was inoperative and lay fallow until Congress, by statute, was moved to give life to it. There is nothing to the contrary in article 17, as argued, which merely refers to the formalities required to ratify, peculiar to each country, such as a confirmation in the United States by the President and Senate. And if there was any doubt therefrom, as to the intention that it should be self-executing, it is disposed of by article 18, immediately following, where it is provided that the treaty shall go into effect within a month after the exchange of ratifications, and remain in force as to each country until a year after it shall be there denunciated. It is to be remembered, also, that the patentee here was a French subject, whose property rights were being thus protected and provided for. It is not as though he were a citizen of the United States, dependent on the domestic law, if that makes any difference. And if the contemporaneous construction given to the treaty by the executive branch of the government, following the opinion of the Attorney General, is insisted on, what is to be said of the contrary view taken by the French and the Italian governments, which is entitled to equal respect—this being a treaty?

While, then, it would be our duty, if it were possible, having regard to the terms of the treaty, to abstain from giving retroactive effect to it, there is nothing by which it can be so limited; and existing patents must therefore be held to have been unfettered, and enlarged accordingly. The authority to so extend the terms of such patents cannot well be doubted. It could have been done by special act of Congress as to any specific invention, a course that was not infrequently indulged in formerly. 22 Am. & Eng. Ency. Law (2d Ed.) 285; 30 Cyc. 918. There was also at one time a general statute by which, upon a proper showing, it could be allowed by the Commissioner. And there was nothing, therefore, to prevent it from being similarly accomplished by an enactment which should apply impartially to all in the same situa-

tion, as provided by the treaty. The construction, that the public had a right to have the monopoly brought to an end, in the case of this or any other invention, according to the terms imposed on the patent by the state of the law at the time it was granted, has nothing to stand upon. Congress has the power to revise and extend a patent, even after it has expired and the invention gone into public use. 22 Am. & Eng. Ency. Law (2d Ed.) 385. And much more is this admissible as to patents still existing. The policy of the law at present is against the extension of patents, which Act March 2, 1861, c. 88, 12 Stat. 246, expressly prohibited. But that is not controlling; the lawmaking powers having authority to change their mind upon the subject, if they see fit to do so.

It is said that, if article 4 bis is held to be retroactive and self-executing, it revives and reinstates every patent which previous to that time had expired by reason of the limitation imposed by the term of a foreign patent. But that does not necessarily follow. It was only existing patents that were affected by article 4 bis, and not those which had already terminated. Besides that, if this was the purpose, there was nothing, as we have just seen, but the wish of Congress to stand in the way of it.

It is further said, however, that Act March 3, 1903, c. 1019, 32 Stat. 1225 (U. S. Comp. St. Supp. 1907, p. 1003), having been passed for the avowed object of effectuating the provisions of the treaty, Congress, in so undertaking to act, in effect declared against the self-executing character of the treaty, and that the construction so put upon it is to be respected, if, indeed, it is not controlling. This is the view taken in United Shoe Company v. Duplessis Shoe Company, 155 Fed. 842, 84 C. C. A. 76, referred to above. But it was recognized in that case that article 4 bis, and, if so, the whole treaty, was self-executing on its face, and it is giving altogether too much force to the action of Congress to have it do away with this simply by implication. If the engagement between the high contracting parties, who entered into the treaty, was, by its terms, immediate and unqualified, which is not only demonstrated above, but is there conceded, no legislative declaration afterwards, on the part of one of them, is competent to qualify it. No doubt the treaty could be denunciated or superseded by appropriate action; but it is not to be set aside or deprived of its inherent force because of acts based upon the assumed necessity for bringing the statute law into harmony with its provisions.

But it is further said that, the act of 1903 coming after the treaty and being confined to giving effect to a part only of its provisions, Congress having deemed it advisable to go no further in that direction, the treaty is to that extent abrogated; the act as so passed being inconsistent with it. There can be no question that, as declared in the Cherokee Tobacco Case, 11 Wall. 616, 621 (20 L. Ed. 227), "a treaty may supersede a prior act of Congress, and an act of Congress may supersede a treaty." And so far as this is the necessary result of the act in the present instance, being later than the treaty, this effect must be given to it. The act of 1903, however, is somewhat peculiar. It is not confined to the purpose expressed in the title, but undertakes to amend, not only section 4887, but sections 4892, 4896, and 4902, also,

only the first of which has anything to do with the present subject. And as to section 4887 it simply re-enacts it as amended by Act March 3, 1897, c. 391, § 3, 29 Stat. 692, except that it enlarges the time after which an application for a patent filed abroad shall debar the obtaining of a patent here for the same invention from 7 months to 12 months, this period in the case of designs being fixed at 4 months; and except, also, that it provides in a new and distinct paragraph that an application filed here within the period so limited, after an application for the same invention filed abroad, shall have the same force and effect as if filed here at the time it was filed there, provided similar privileges are afforded by such foreign country to citizens of the United States by law or treaty; and provided, further, that no patent shall be granted for an invention patented or described in a printed publication in this or any foreign country more than two years before the filing in this country, or which had been in public use or on sale in this country for a like previous period.

But it is difficult to see, upon the most liberal construction, how, as so enacted, it can be given the restrictive effect that is now claimed for it. It is true that it provides for but a small part of that which is covered by the treaty, and if legislation was necessary to give effect to the treaty there would not be much left to it. But that, as we have seen, is not the case. The treaty, if uncontrolled, is self-executing. It is only as Congress in this abbreviated fashion has apparently seen fit to proceed upon a different assumption that any doubt is cast upon it. A repeal by implication is never favored, even between statute and statute; and much more is not a treaty, which has been mutually agreed to, to be overturned by a later statute, which is the individual act of one of the parties. To sustain that view in any case there must be such a clear repugnancy that treaty and statute cannot stand together, which, in the present instance, will hardly be contended for. The only inconsistency, as just stated, is that, where one deals with the subject comprehensively, the other does so restrictedly, which is not sufficient; there being nothing to convince that this was the purpose.

It is said that this is shown by the title, which commits the act to the carrying out of the treaty, which must thus be regarded as the only means appropriate for doing so. Dallemagne v. Moisan, 197 U. S. 169, 25 Sup. Ct. 422, 49 L. Ed. 709. The title of an act may no doubt be resorted to, under proper circumstances, to explain or give character to the body of it. But that it should be allowed controlling force, under the showing that is made here, is entirely unwarranted. Only about one-tenth of the act in question has anything to do with the title; the rest of it, as we have seen, being entirely unrelated, except as it deals with the general subject of patents. And with the little heed that is so paid to it in the body, it would be straining a point to accord to the title the predominant part that is now urged for it. The title being disposed of, there is nothing in the act itself to in any way disturb us. It did not undertake to undo what had been done by the treaty. At most it merely neglected to take such steps as would have brought the statute law into complete conformity with its provisions. But the treaty was not dependent upon this. It went into effect of its own force some six months before. And it is not to be set aside in any such

indirect and inconclusive manner after that. It is also further to be observed that, even if the act of 1903 is held to have superseded or abrogated the treaty, the treaty having gone into effect in this way meantime, the patent in suit and others similarly situated were thereby freed from their dependency upon corresponding foreign patents, and they could not be put back by the act into their former position, which would offend against the principle of nonretroactivity contended for, even more seriously than anything which is now complained of.

Taking treaty and acts of Congress together, therefore, the case stands this way: By section 4887, Rev. St., a domestic patent for the same invention previously patented abroad was made dependent on the term of such foreign patent, by which it was limited. The act of March 3, 1897, removed this restriction, but provided (section 8) that it should not apply to patents granted prior to January 1, 1898, nor to applications filed before that on which patents were subsequently granted. This prevented the patent in suit, for the time, from having the benefit of this legislation, having been applied for December 29, 1897, two days within the period fixed by the proviso. Then the additional act of Brussels of 1900 was ratified, by which, according to article 4 bis, there was a complete unfettering of foreign and domestic patents for the same invention; and this by express terms was made to apply to existing patents. Such was the state of the law, and such the position of the patent in suit, when the act of March 3, 1903, came into existence. As just stated, this could not undo what had already been done, nor put back the patent into its former dependent condition. Having become entitled to the full term of 17 years accorded to patents generally, it could not thereafter be again restricted. Nor did the act of 1903 indeed, undertake to do so. It simply re-enacted section 4887, as amended by the act of 1897, leaving out the limitation which time and treaty had doubly disposed of, and introducing certain provisions in conformity with the treaty. It is only by reading into this record that which is not to be found there, and has no rightful place in it—that the treaty was not retroactive, and was not self-executing, contrary to the plain effect of it—that the patent can be cut down or made dependent again upon the terms of the French patent.

For both reasons, therefore, which were discussed at the argument, the plea interposed in the court below, in my judgment, was bad, and should have been overruled; and the decree sustaining it must be reversed in consequence.

(173 Fed. 9.)

GRAHAM v. PEALE, PEACOCK & KERR OF NEW YORK.

(Circuit Court of Appeals, First Circuit. October 5, 1909.)

No. 804.

FRAUD (§ 20*)—FALSE REPRESENTATIONS—FAILURE TO COLLECT CLAIM.

Defendant, while acting for a trust company to which a corporation was largely indebted, induced plaintiff's attorney to refrain from pressing plaintiff's claim against the corporation then due by attachment or other process by falsely representing to such attorney that the corporation was in good financial condition, that the trust company would extend the corporation's credit by loaning an additional $25,000, and that, if plaintiff and the trust company and another constituting the corporation's lar-

gest creditors would permit the corporation to continue, the corporation would make pro rata payments, and would be able to relieve itself from its difficulties. The trust company at this time, however, was secretly gaining absolute control of the corporation's assets, and recovered for itself a large portion of its indebtedness before plaintiff discovered defendant's duplicity, when the corporation was found to be bankrupt and proceedings in bankruptcy were instituted against it. *Held*, that such facts were insufficient to sustain an action for deceit against defendant. Bradley v. Fuller, 118 Mass. 239, applied.

[Ed. Note.—For other cases, see Fraud, Cent. Dig. § 18; Dec. Dig. § 20.*]

In Error to the Circuit Court of the United States for the District of Massachusetts.

Action by Peale, Peacock & Kerr of New York against John M. Graham. Judgment for plaintiff, and defendant brings error. Reversed and remanded, with directions.

Robert M. Morse (William M. Richardson, on brief), for plaintiff in error.

Ezra R. Thayer and Harold S. Davis, for defendant in error.

Before COLT and PUTNAM, Circuit Judges, and ALDRICH, District Judge.

PUTNAM, Circuit Judge. This was a suit at common law for an alleged deceit, in which the plaintiff in the Circuit Court recovered a verdict for $20,005.81, with interest, being substantially the entire amount of its debt as hereinafter described. Thereupon the defendant in that court sued out this writ of error. It will be convenient to describe the parties in this opinion as arranged in the Circuit Court. Many questions were discussed before us which it is not necessary for us to consider; because, unless an entirely different case is hereafter made in the Circuit Court than what appears on this record, the point on which we let our decision turn will dispose of the litigation. In order to properly settle this point we must take the case as told by the plaintiff, which is as follows:

The Thomas & Pike Company (hereinafter called the "Coal Company") was a corporation selling coal at retail in Boston. It had a capital stock of $100,000, and did a business of about 80,000 tons a year. Its treasurer and manager was Herbert W. Pike, who had been in the business, either as treasurer of the corporation or as partner in the firm which preceded it, for many years. The secretary of the corporation was Fred L. Childs, who came into the business about 1900. Before that time he had for many years been discount clerk at the International Trust Company, of which the defendant was the president, and his relations with the defendant were very close. He caused the Coal Company to bank with the Trust Company. As secretary of the Coal Company, he attended largely to its financial affairs. In 1902, when the coal strike began, the credit and business of the Coal Company were good. In the early winter of 1902 the Coal Company adopted the policy of keeping itself fully supplied, and it had coal all winter to meet all demands. It had to pay high prices for the coal, but

the profit was very large, as it sold at retail all the way from $18 to $25 a ton. But this condition of affairs was unexpectedly interrupted. The weather grew warm in January, and remained so until the demand for coal greatly decreased, and prices dropped accordingly. As a result the Coal Company found itself by the end of January with a large stock of coal on hand, on which it was likely to make a heavy loss. It had bought its coal from various dealers, much the largest part of its supply coming from E. B. Townsend. Among others it bought several cargoes from the plaintiff, the last two of which, amounting to $35,505.81, were shipped on January 8th and January 21st, and arrived in Boston about ten days after those dates. By the terms of the sale the Coal Company was bound to pay cash on receipt of bill of lading; but it did not do so. On January 26th Pike asked Edgarton, the broker who had sold the coal for the plaintiff, to resell it at a considerable loss, and promised to make up the difference. Edgarton could not get his price, and Pike presently reported that he had resold the cargoes himself. He promised to pay the plaintiff in a day or two, as soon as he received the money; but he did not pay. On Monday, February 9th, he came in and asked Edgarton to see the defendant. This Edgarton did at once. The defendant urged the desirability of granting some indulgence to the Coal Company, expressed the utmost confidence in it as a thrifty going concern, worthy of the support of the few larger creditors, and as proof of his confidence said that his bank was ready to advance it, if necessary, $25,000 more than it then owed. Upon his advice Edgarton wrote to New York laying the matter before the plaintiff, and in consequence F. D. Peale, Esq., a New York lawyer, who was the plaintiff's counsel, and also its secretary and director, came to Boston on February 12th to attend to the matter.

Peale called on the defendant, who discussed the Coal Company's affairs in detail, enlarging on the value of its business and the excellence of its prospects. He argued that its present difficulties were merely temporary, resulting from its overstock of coal and the peculiar conditions caused by the strike; and he strongly recommended as the only wise course that the three large creditors stand together, and let the Coal Company pay off its debts pro rata as it sold its coal and collected its accounts. Peale testified:

"I asked him what they owed his bank, and he said about $65,000; and he said he had such confidence in their ability to pull through that he had said to them already, and he repeated it to me, that he was willing to loan them an additional $25,000 if that should prove necessary in connection with the conduct of their business. He further said that he had laid before Mr. Townsend, whose claim was even larger than the Trust Company's, the plan of having the three creditors stand together; and that Townsend had assented to it if the plaintiff was willing. He said he and Mr. Townsend had agreed that was the best thing to do, and that they were both willing to do it, and that it simply was up to us, and our decision would determine whether the plan should become effective or not."

Peale was persuaded by these representations, and accepted the defendant's view as to the best course to be pursued. Accordingly he returned to New York without insisting on immediate payment. The plaintiff's directors approved his decision, and permitted the Coal Com-

pany to go on with its business, supposing that sundry payments which were thereafter received from time to time, amounting in all to $15,500, were made in accordance with the plan proposed. On June 10th these payments ceased, and in consequence Peale came to Boston in July and saw Childs. After assurances from the latter that he had kept faith with the plaintiff, and had paid it pro rata with Townsend and the Trust Company, and after every excuse and device to prevent an investigation of this statement had been exhausted, Peale at last obtained access to the Coal Company's books. From these and from the bookkeeper, he learned for the first time, not only that the Trust Company's debt had been paid in full, and that Townsend had received over $90,000 on account of his claim, leaving a balance due him of only about $20,000, but, furthermore, that the business of the Coal Company had long since been secretly sold out, leaving no assets for the payment of the plaintiff's claim except some accounts of doubtful value, and that this winding up of its affairs had been completed in April, long before the dates of the letters in which, as late as the end of May, Childs had kept up the pretense that he was actively engaged in the affairs of a going concern. The plaintiff immediately filed a petition in bankruptcy against the Coal Company, and it was adjudicated a bankrupt. The plaintiff disclosed its present claim at the outset of the bankruptcy proceedings, but it did not sue the defendant until after the trial of a suit brought against the Trust Company by the trustee in bankruptcy, preferring that litigation for the benefit of the estate should have precedence over its private claim.

On February 12, 1903, the Trust Company held 11 notes of the Coal Company, amounting to $68,500, falling due at different dates between February 16th and May 15th of the same year. On February 2d the Trust Company lent to the Manufacturers' Commercial Company, a corporation engaged in lending money on the security of accounts, the sum of $48,000, taking as security an assignment of open accounts for $64,694.61 due the Coal Company. These were substantially all its good accounts. The Manufacturers' Commercial Company drew a check for $48,000, and turned it over to the Coal Company. The Coal Company simultaneously deposited the $48,000 to its credit with the Trust Company, drew a check in favor of the Trust Company for $67,878.09, the amount of its outstanding notes discounted at 6 per cent., and paid off those notes. To make this check good the Trust Company gave the Coal Company an additional credit of $17,000 for which it took a demand note. At the close of the day it had thus changed its claim against the Coal Company from $68,500, no part of which was due, to $17,000 due on demand, and had received through the Manufacturers' Commercial Company an assignment of all the Coal Company's good accounts. The final stages of these transactions were going on at the very moment the defendant was talking to Peale. And on the following day, by lending $5,800 more to the Coal Company upon a note which gave the holder the right to apply the collateral to any other obligations of the Trust Company, and taking as security an assignment of the equity in the accounts received the day before from the Manufacturers' Commercial Company, the Trust Company completed its hold on those accounts as security for all its claims. The transac-

tion between the Manufacturers' Commercial Company and the Coal Company began on February 9th, when Childs called on Wolcott, the manager of the Manufacturers' Commercial Company, and applied for the loan. Wolcott said that he could not make it without the consent of the Trust Company, from which he would have to get the money. This consent he obtained. On that day or the next the Manufacturers' Commercial Company agreed to make the loan, and on February 11th, the list of accounts and the other papers were completed, and Childs took them in to Wolcott; but the latter refused to accept them because of a formal defect in the execution, and the transaction accordingly did not go through till the next day.

The plaintiff contended that the defendant's representations to Peale that there was a plan on foot by which the three large creditors should permit the Coal Company to go along and should accept payments pro rata as it collected its accounts, that Townsend had assented to this, that the Trust Company was ready to do so, and was ready to increase the Trust Company's loan by further advances to the extent of $25,000, if necessary, were all willfully false; that they were intended to prevent the plaintiff, the only creditor whose demand was pressing and required instant attention, to abstain from insisting on the immediate payment which it had been promised and was entitled to receive; and that they accomplished their purpose.

The only portion of the plaintiff's declaration, as finally settled by amendment, which we need cite, is as follows:

"Whereas, in fact, at the time when the defendant made the said representations each of said representations was altogether fraudulent and false and no plan or arrangement whereby said three parties should act together and give time and accept payment of their several debts only pro rata or co-operate in any way was then or ever had been under consideration, and said Townsend had never assented to any such plan or arrangement, and the defendant as president of said International Trust Company was not willing to enter into any such plan or arrangement, or to advance $25,000 or any other sum in addition to said sums advanced before February 12, 1903, but, on the contrary, the defendant was then secretly arranging and contriving with said Thomas & Pike Company to place said International Trust Company in a more favorable position than the plaintiff and said Townsend, and to obtain advantages for said International Trust Company over plaintiff and said Townsend in case said Thomas & Pike Company should prove to be unable to pay its debts in full, all of which the defendant then well knew. And by means of the said representations the plaintiff, acting on the faith thereof and in the belief that the same were true, was induced to abstain from insisting on immediate payment of said indebtedness due to it from said Thomas & Pike Company and from taking immediate steps to collect, and from collecting, the full amount of said indebtedness as it otherwise could and would have done, and to accept from time to time certain payments on account of said indebtedness, amounting in all to the sum of $15,500, in the belief that said payments were made in accordance with said pretended plan and arrangement, and said Thomas & Pike Company thereafter became bankrupt and wholly unable to pay the whole or any part of the balance of its said indebtedness to the plaintiff over and above said sum of $15,500, and the plaintiff thereby wholly lost said balance of said indebtedness and otherwise suffered great damage, all by reason of said false and fraudulent representations of the defendant."

The charge of the judge very carefully pointed out to the jury certain elements necessary to maintain an action for deceit, and in all those particulars it was thoroughly guarded. The portions of the

charge essential to the point which we will consider were summed up as follows:

"I am asked to instruct you, and I do instruct you, that if the plaintiff intended to demand immediate payment in full of the debt owed it by the defendant, and if it refrained from so doing until the Thomas & Pike Company had become altogether insolvent, in reliance upon the false representations of the defendant, and if, at the time such representations were made, the Thomas & Pike Company were solvent, so that, as the result of the demand, the plaintiff would have obtained payment in full, he is entitled to payment in full. That I have already charged you, as matter of law, but have suggested to you that it appears to me to be highly improbable that, under any circumstances, the Thomas & Pike Company could have paid all its debts in full. You are judges of that as a question of fact. I have a right to suggest to you that the difficulties in the way of that conclusion are at least very considerable."

The defendant relies on Bradley v. Fuller, 118 Mass. 239, decided on September 3, 1875, the substance of which he correctly states as follows:

"In Bradley v. Fuller, 118 Mass. 239, it was held that, if a person who has a claim against a corporation, which he intends to enforce by an attachment of its property, is purposely induced by false and fraudulent representations of its treasurer to refrain from making an attachment, and all the property of the corporation is subsequently attached for the debt of another person and is sold on execution, an action of tort for such fraudulent representations will not lie against the treasurer."

Taking this case as thus explained in connection with the fact that the plaintiff had not even sued out a writ of attachment with any present intention of seizing the property of the debtor in question here, and had in no way secured any lien on, or any present right of any kind to, the assets of its debtor, Bradley v. Fuller seems decisive against the plaintiff on the record before us. The decision, so far as brought to our attention, must be accepted as the settled law of Massachusetts, where these transactions occurred; and we are unable to perceive any reason why we should not, on this point, follow the local law as thus promulgated by the local courts. All the later Massachusetts decisions cited by the plaintiff have substantial elements not found here or in Bradley v. Fuller. There is nothing in the nature of the question, or in any decision of the Supreme Court, so far as we have been able to discover, which justifies us in making a departure therefrom. On the other hand, the decisions of the Supreme Court support it. Findlay v. McAllister, 113 U. S. 104, 5 Sup. Ct. 401, 28 L. Ed. 930, decided on January 12, 1885, has been pressed on us. We find nothing therein inconsistent with Bradley v. Fuller; but, on the other hand, the expressions in the opinion, so far as they furnish a rule for our guidance, are in harmony with it. Indeed, Bradley v. Fuller is cited by the court at page 114 of 113 U. S., page 406 of 5 Sup. Ct. (28 L. Ed. 930), without any dissent therefrom or disapproval thereof. Certain Pennsylvania decisions which look to sustaining the plaintiff's case, cited at page 113, the opinion disapproves of at page 114 of 113 U. S., page 406 of 5 Sup. Ct. (28 L. Ed. 930) in the following words:

"The three cases last cited extend the rule further than the exigency of the present case requires, and further than this court has been disposed to go."

In Yates v. Joyce, 11 Johns. (N. Y.) 136, cited at page 113 of 113 U. S., page 405 of 5 Sup. Ct. (28 L. Ed. 930), the plaintiff had an ex-

isting lien on the property removed or destroyed. In Smith v. Tonstall, Carthew, 3, also cited at page 111 of 113 U. S., page 404 of 5 Sup. Ct. (28 L. Ed. 930), the plaintiff had had a judgment on a scire facias to have execution, so that he had advanced beyond the conditions in Bradley v. Fuller, and beyond those in the case at bar. However, Findlay v. McAllister reaches clearly only a case where there is an existing right of a specific character; that is, the plaintiff there had secured a writ of mandamus directing a levy of a tax to pay his debt, which levy the defendants there had conspired to prevent. The general distinction which takes Bradley v. Fuller out of that case was clearly made at page 111 of 113 U. S., page 404 of 5 Sup. Ct. (28 L. Ed. 930), as follows:

> "The right of a judgment creditor to proceed by action against those who rescue the person of his debtor arrested on mesne or final process, or interfere with the goods of his debtor so as to prevent a levy or sale by the sheriff to satisfy his judgment, is well recognized at common law."

And so again at pages 114 and 115 of 113 U. S., page 406 of 5 Sup. Ct. (28 L. Ed. 930), where the court lays aside, as not pertinent to the issue before it, cases in which "the plaintiff was merely a general creditor, and had no judgment or attachment or lien."

Smith v. Tonstall need not be referred to further, but it is interesting to do so. On account of statutory changes in the law during the more than 200 years since it was decided, it seems to have become obsolete in England. It is not cited in Mews' Digest of 1897, nor is it referred to by either Pollock or Mayne. By the common law, execution had relation to the time of the awarding of judgment, and from that time it imposed a lien on all the defendant's goods, even though sold bona fide and for a valuable consideration. The statute of 29 Charles II relieved this condition only in favor of purchasers bona fide. Consequently, as against the defendant in that case, who was not a bona fide purchaser, and who removed the goods out of the jurisdiction, the plaintiff had an existing present right. Therefore the case is like Yates v. Joyce, already explained, with only the unimportant difference that in one there was a lien in hand on personal property and in the other a like lien on realty.

Adler v. Fenton, 24 How. 407, 16 L. Ed. 696, decided that a creditor whose debt was not due could not bring a suit against the debtor and persons conspiring with him to fraudulently conceal his goods. The opinion does not point out that the fact that the debt was not due was an essential matter. At page 412 it states that the creditor "lost no claim upon or interest in the property, for he never acquired any." It adds:

> "The most that can be said is that he intended to attach the property, and the wrongful act of the defendant has prevented him from executing his intention."

It also observes that the claims of morality and justice require that there should be protection against such acts of dishonest debtors; "but the Legislature must determine upon the remedies appropriate for this end." In some states this suggestion has been acted on, and statutes have been enacted of a penal character against persons receiving conveyances of property intended to defraud creditors.

Adler v. Fenton is explained in Lincoln v. Claflin, 7 Wall. 132, 137, 19 L. Ed. 106, wherein it is said:

"The creditors in that case possessed no lien upon or interest in the property of their debtors to impair or clog in any respect the right of the latter to make any use or disposition of it they saw proper. The exercise of that right, whatever the motive, violated no existing right of the creditors, and consequently furnished them no ground of action."

Bigelow on Torts (8th Ed., 1907) p. 101, asserts without any question the rule laid down in Bradley v. Fuller quite as broadly as we accept it. A careful examination of the other text-writers has failed to help us in either direction. Nevertheless, the decisions we have cited proceed on grounds so broad as to lead to the result that we should apply Bradley v. Fuller, 118 Mass. 239. As Bradley v. Fuller goes to the root of the plaintiff's suit, we need not follow this record further.

The judgment of the Circuit Court is reversed, the verdict is set aside, and the case is remanded to that court for further proceedings in accordance with law; and the plaintiff in error recovers his costs of appeal.

ALDRICH, District Judge (concurring in the result, but disagreeing with the ground of decision). I am far from agreeing with the idea that there can be no recovery by a party who has an overdue claim and intends to demand immediate payment of a solvent debtor, and who is directly influenced from making his demand and enforcing payment by the willfully false representations of another creditor, who intends that the false representations shall be acted upon, and who, by means thereof, reaps the benefit of his fraud by collecting his own claim in full, thereby rendering the debtor insolvent and thus causing the party whom he has misled to suffer substantial pecuniary loss; and I do not think the right of recovery depends at all in such a case upon whether the injured creditor had proceeded so far as to take out a writ.

The learned judge submitted the case to the jury with distinct and emphatic instructions that the plaintiff could not recover unless the representations and the story which the defendant told were willfully false, "that it is a lie, that the defendant lied." There were also explicit instructions that the plaintiff must have intended to demand immediate payment when the debtor was solvent, and that he must have refrained from doing so by reason of the false representations of the defendant, and but for such representations that the plaintiff would have obtained payment in full.

Aside from the foregoing explicit instructions, the theory on which the case was submitted and the general principles governing were stated as follows:

"For the plaintiff to recover, he must satisfy you first that the representations which he alleges, the story which he says defendant told, is false, not merely that it is untrue in the sense that it is not accurate, that it does not correspond to the facts, but that it is willfully false, that it is a lie, that the defendant lied. That is the first thing the plaintiff must establish.

"The second point is that the lie is concerned with matter of fact. It must not be merely a breach of a promise or something of that sort. It must be a

false statement regarding a fact. And what a fact is in the eye of the law I shall discuss with you later.

"In the third place, the statement must be made by the defendant with the intention that the plaintiff shall act upon it; that is, a mere passing remark, not made with any intention that the plaintiff shall act upon it, is not such a false representation that the plaintiff can recover.

"And the fourth requisite to the plaintiff's case, the fourth thing that the plaintiff must prove, is that he did act upon it, that he did act upon this lie, to his own pecuniary hurt.

"Those are the four matters concerning which the plaintiff must satisfy you here. First, that the statement was a lie. It must be false. If it should happen to be true, the plaintiff cannot recover. It must be not only untrue in the sense that it does not correspond with the facts, but that it is willfully untrue, willfully false, false to the defendant's knowledge. That is the first. The second is that it must be a representation of fact. The third is that it must be a representation made with the intention that the plaintiff shall act upon it. And the fourth is that the plaintiff must have acted upon it to his own pecuniary hurt."

In short, as disclosed by the record and as established by the verdict of the jury upon the issues of fact submitted, the defendant, representing another creditor of the Coal Company, through false representations, stood the plaintiff off from collecting its claim, and by means thereof collected in full the claim of the Trust Company, which he represented, and of which he was president. Holding that there can be no recovery in such a situation where damages are susceptible of legal proof would be setting a premium on one's wrongdoing for one's own benefit.

I do not conceive that Bradley v. Fuller, 118 Mass. 239, at all applies to a situation like this, because in Bradley v. Fuller it was not the party who made the false representations that reaped the benefit of the fraud. That was simply a case where the treasurer of a debtor corporation (not a representative of another creditor like Graham) by false representations induced a creditor not to sue, and thereafter another creditor, one not tainted with fraud at all, stepped in and attached the property of the corporation, and that case therefore presents an entirely different question. If in Bradley v. Fuller the attaching creditor who collected his claim had secured the pecuniary advantage and benefit through fraud which lulled the first creditor into nonaction, and if legal remedy had been sought against him, it would be like the case at bar. Again, this case is not like Bradley v. Fuller and Adler v. Fenton, but in some respects more like Lincoln v. Claflin, because the action here is not against the debtor or the representative of a debtor, and because the question here is not whether the plaintiff, as a ground of action, had acquired a lien upon or an interest in the property of the debtor, but, quite independent of such considerations, whether the plaintiff, who was a creditor, has a right of action against the representative of another creditor, grounded upon fraud and deceit, successfully practiced under circumstances of trust and reliance.

But aside from the fundamental question of the right of recovery by an injured party upon the ground of fraud against another who has for himself, or for the interests which he represents, intentionally reaped a harvest by means thereof under circumstances where the question of damages would be susceptible of solution with legal certainty, I think the record presents a serious question whether the

plaintiff in this case is entitled to recover. This question results because, under peculiar and exceptional circumstances, his alleged damages are so far in the field of contingency as to present a situation of legal uncertainty in that respect. There were many inherent contingencies. If Peale, Peacock & Kerr had pressed payment, they might have secured their entire indebtedness, and they might not. If not, they might have secured a writ and made an attachment, and they might not. And in case of an attachment the Coal Company might have been thrown into bankruptcy, thus involving the contingencies and uncertainties of such a proceeding, and a result based upon unforeseen and unexpected depreciations. Or if they had been voluntarily paid without attachment, under possible bankruptcy proceedings and a possible showing of belief of insolvency, the money might have been recovered back by a trustee in bankruptcy upon the ground that the payment amounted to a voidable preference.

The question of legal uncertainty in respect to damages was raised by the requests and assignment of errors (20 to 25, inclusive), and the court was, in effect, asked to direct a verdict for the defendant on the ground that the plaintiff had proved no legal damages. It is true the court, in effect, told the jury that the damages must be made certain, that the jury must find that the Coal Company was solvent, and that the plaintiff would, in fact, have collected its entire claim; but, after all, the question still remains fairly enough, under the requests, whether the proofs were of such a character of legal certainty as to entitle the plaintiff to have that question submitted to the jury. Apparently the whole case in respect to damages was in the field of conjecture, and apparently all theories about damages are necessarily speculative and uncertain, thus presenting, I fear, one of those unfortunate situations where it is impossible for an injured party to show in a legal sense the extent of his injury, or even to show with legal certainty that he was injured at all. Lamb v. Stone, 11 Pick. (Mass.) 527, 534; Adler v. Fenton, 24 How. 407, 412, 16 L. Ed. 696.

I cannot agree to the ground of decision disclosed in the majority opinion, but, as my impression is that the plaintiff is not in a position to make his damages legally certain, I agree with the result reached.

(173 Fed. 18.)

CITY OF HELENA v. HELENA WATERWORKS CO.

(Circuit Court of Appeals, Ninth Circuit. October 4, 1909.)

No. 1,703.

1. COURTS (§ 328*)—FEDERAL COURTS—JURISDICTION—AMOUNT IN CONTROVERSY.

Where the primary purpose of a bill was to enjoin the execution of a contract for the construction of a city water system and to restrain the issuance and delivery of city bonds to the extent of $600,000 on the ground that the issue of the bonds was void, and the bill alleged that if the bonds were issued complainant would be required to pay in taxes a sum exceeding $10,000, such amount represented the amount in controversy for the purpose of determining federal jurisdiction, and not the amount of the

first annual assessment on complainant's property to pay interest and provide a sinking fund for the payment of the bonds.

[Ed. Note.—For other cases, see Courts, Cent. Dig. §§ 890–896; Dec. Dig. § 328.*

Jurisdiction of Circuit Court as determined by the amount in controversy, see notes to Auer v. Lombard, 19 C. C. A. 75; Tennent-Stribling Shoe Co. v. Roper, 36 C. C. A. 459.]

2. MUNICIPAL CORPORATIONS (§ 1000*) — BONDS — PRELIMINARY INJUNCTION — SCOPE—BILL.

Where a bill sought to restrain the issuance of bonds by a city for the construction of a waterworks system and to restrain the city from entering into a contract for the construction of such system on the ground that the proceedings were void, a preliminary injunction restraining the issuance of the bonds, and also restraining the city from making any contract or incurring any indebtedness for a waterworks system or supply, was to be construed in accordance with the allegations of the bill and the purposes of the suit, and was, therefore, not objectionable as enjoining the city from taking further steps for a new bond issue to acquire a water system.

[Ed. Note.—For other cases, see Municipal Corporations, Dec. Dig. § 1000.*]

Appeal from the Circuit Court of the United States for the District of Montana.

Bill by the city of Helena against the Helena Waterworks Company to enjoin the issuance and sale of water bonds and the making of a contract for the construction of the city water system. From an order granting an interlocutory injunction, the city appeals. Affirmed.

The appeal in this case is taken from an interlocutory injunction issued on February 11, 1909, enjoining the appellant from issuing or selling $600,000 of its water bonds, and from making any contract or incurring any indebtedness for a water system or supply, and from collecting from the appellee a tax of one mill, or any other amount, for the payment of interest on the bonds. The appellee, as complainant, in its bill set forth facts showing the invalidity of the issue of the bonds, and upon the bill and the answer of the appellant thereto the court found and adjudged that the issue was unlawful and void, and thereupon granted the interlocutory injunction. The appellant objected to the jurisdiction in the court below, both by demurrer and plea, on the ground that it did not appear from the bill that the requisite jurisdictional amount was involved in the controversy. The bill alleged that the matter in dispute exceeds the sum of $2,000, exclusive of interest and costs; that the appellee is the owner of real and personal property in the city of Helena, of the value of several hundred thousand dollars, on which taxes have been levied and collected by the city; that the assessed value of the taxable property of the city of Helena, for state and county taxes for the year 1907, was the sum of $10,799,050, and for the year 1908, $11,629,834; that on September 24, 1908, the city council of said city passed a resolution, which was approved by the mayor, levying a tax for the payment of interest upon said water bonds of one mill; that if the bonds are issued, and become obligations on said city, the taxes on the property of the appellee within the said city, to pay interest on said bonds and provide a sinking fund for the redemption thereof, will exceed the sum of $10,000.

Edward Horsky and C. A. Loomis, for appellant.

Milton S. Gunn and Carl Rasch, for appellee.

Before GILBERT, ROSS, and MORROW, Circuit Judges.

GILBERT, Circuit Judge (after stating the facts as above). The appeal presents but two questions: First, whether the amount in con-

troversy was sufficient to confer jurisdiction on the court below; and, second, whether, in view of the issues involved, the injunction order was more inclusive than it should have been. It is not alleged in the bill that the first of the annual assessments about to be levied upon the appellee's property will exceed $2,000, exclusive of interest and costs, and in the answer it is alleged that the first assessment will be but $398.50. But the bill does allege that, if the bonds issue and become obligations of the city, the taxes on the appellee's property to pay interest on the bonds from year to year and to provide a sinking fund for the redemption thereof will exceed in the total the sum of $10,000.

The appellant relies upon decisions such as Holt v. Indiana Mfg. Co., 176 U. S. 68, 20 Sup. Ct. 272, 44 L. Ed. 374, in which it is held that, in a suit to enjoin the collection of a certain specific annual tax, the future taxes which may be affected by the decision cannot be included in determining the value of the matter in dispute. But the present case does not come within the doctrine of those decisions. Here the main and primary purpose of the bill is, not to enjoin the collection of a sum claimed to be due as a tax, but to enjoin the execution of a contract for the construction of a water system and to restrain the issuance and delivery of bonds of $600,000. In such a case it is sufficient to sustain the jurisdiction if it appear that the total burden of future taxation that will be imposed upon the complainant's property by the threatened action equals or exceeds the jurisdictional amount. The question of the power of the municipality to take the proposed step and to create the liability to taxation being involved, the amount in controversy is the sum of the complainant's taxation—not his taxes for one year, but his taxes for the whole period of his liability thereunder. In Brown v. Trousdale, 138 U. S. 389, 11 Sup. Ct. 308, 34 L. Ed. 987, the suit was brought by several hundred taxpayers, for themselves and others associated with them, and for the benefit of all other taxpayers, alleging the invalidity of certain bonds, and praying that their collection be enjoined. The court said:

"The main question at issue was the validity of the bonds, and that involved the levy and collection of taxes for a series of years to pay interest thereon, and finally the principal thereof, and not the mere restraining of the taxes for a single year. The grievance complained of was common to all plaintiffs, and to all whom they professed to represent. The relief sought could not be legally injurious to any of the taxpayers of the county as such, and the interest of those who did not join in or authorize the suit was identical with the interest of the plaintiff. The rule applicable to plaintiffs, who claim under a separate and distinct liability, and that contested by the adverse party, is not applicable here; for, although as to the tax for the particular year the injunction sought might restrain only the amount levied against each, that order was but preliminary, and was not the main purpose of the bill, but only incidental. The amount in dispute, in view of the main controversy, far exceeded the limit upon our jurisdiction, and disposes of the objection of appellees in that regard."

In Colvin v. Jacksonville, 158 U. S. 456, 15 Sup. Ct. 866, 39 L. Ed. 1053, a citizen of another state brought a suit against the city of Jacksonville, Fla., and its mayor, to enjoin and restrain the issue, sale, delivery, pledge, or other disposition of a certain issue of bonds to the amount of $1,000,000. The Circuit Court had found that the total amount of tax which the plaintiff would be obliged to pay for interest and sinking fund on account of the said proposed issue of bonds would

not exceed $2,000, and on that ground had denied its jurisdiction. In the Supreme Court the ruling was affirmed, and it was held as matter of law that the interest which the complainant had in the issue of the bonds, and not the amount of the entire issue thereof, was the amount in controversy. So in El Paso Water Co. v. El Paso, 152 U. S. 157, 14 Sup. Ct. 494, 38 L. Ed. 396, in a bill to enjoin the city from issuing certain bonds, it was alleged that if they were issued the complainant would be compelled to pay taxes on its property for the interest on the bonds and to provide a sinking fund for the principal thereof; but the amount of the tax that would thus be imposed upon the complainant's property was not disclosed. The court held that, in a bill filed by a plaintiff to protect his individual interest and to prevent damage to himself, it must affirmatively appear that the acts charged against the city, and sought to be enjoined, would result in his damage in a sum equal to the jurisdictional amount. Said the court:

"So far as respects the matter of taxes which by the issue of bonds will be cast upon the property of the plaintiff, it is enough to say that the amount thereof is not stated, nor any facts given from which it can be fairly inferred."

It is clear, from the expressions of the court in the two cases last referred to, that it was solely because the total possible liability of the complainants under the bond issue sought to be enjoined therein would not amount in the aggregate to a sum sufficient to confer jurisdiction that the power of the court to restrain the creation of that liability was denied. In harmony with the doctrine of those cases is the decision of the Circuit Court of Appeals for the Eighth Circuit in City of Ottumwa v. City Water Supply Co., 119 Fed. 315, 56 C. C. A. 219, 59 L. R. A. 604.

The appellant attempts to distinguish that case from the case at bar on the ground that there the constitutional power of the city to issue the bonds was denied, and argues that a distinction is to be observed between cases where the municipality has absolutely no lawful power to enter into the contract to issue the bonds and cases where the power exists and it is sought to defeat the action of the municipality on grounds affecting the legality of the proceedings. Upon principle, we think no such distinction can be made. If, on the ground of the alleged invalidity of the proposed action of the municipal corporation, the amount in controversy in a taxpayer's suit for an injunction is to be measured by the total amount of the burden to be imposed on him, it can make no difference whether the illegality of the action consists in the violation of constitutional restrictions, or in irregularities in procedure, or, indeed, in mere violation of the complainant's contractual rights; for in either case the controversy involves but one question, the power of the corporation to make the contract and to issue the bonds. We hold that the amount in controversy in the present case is sufficient to sustain the jurisdiction.

It is contended that the injunction goes beyond the issues in restraining the appellant "from making any contract or incurring any indebtedness for a water system or supply," and that in the broad terms in which it is expressed the appellant is enjoined from taking further

steps to provide for a new bond issue for the purpose of acquiring a water system. In answer to this it is sufficient to say that the injunction is to be read in the light of the averments of the bill and the purposes of the suit. When so considered, it is apparent that it restrains only the action which is complained of in the bill. Sailors' Union of the Pacific v. Hammond Lumber Co., 156 Fed. 450, 85 C. C. A. 16.

The injunction order is affirmed.

(173 Fed. 918.)

CHICAGO GRAIN DOOR CO. v. NATIONAL MALLEABLE CASTINGS CO. et al.

(Circuit Court of Appeals, Sixth Circuit. November 16, 1909.)

No. 1,938.

PATENTS (§ 328*)—ANTICIPATION—BRACKET FOR CAR DOORS.

The Hill patent, No. 527,792, for a bracket for car doors, fastened to the side of the car by a screw having a square countersunk head, not rotatable on the bracket, and removable only by revolving the bracket itself, which cannot be done when the door is closed, is void for anticipation by the Eubank patent, No. 512,467, the device of which operates on the same principle; the only difference being that instead of a screw, a stud integral with the bracket, and having flanges working in the manner of the threads of a screw, is used.

[Ed. Note.—For other cases, see Patents, Dec. Dig. § 328.*]

Appeal from the Circuit Court of the United States for the Northern District of Ohio.

Suit in equity for infringement of patent by the Chicago Grain Door Company against the National Malleable Castings Company and A. A. Pope. From a decree dismissing the bill, complainant appeals. Affirmed.

O. R. Barnett, for appellant.

C. P. Byrnes, for appellees.

Before LURTON, SEVERENS, and WARRINGTON, Circuit Judges.

SEVERENS, Circuit Judge. The patent of the appellant, for the infringement of which this suit was brought, is No. 527,792, and was granted to Edward A. Hill, October 23, 1894, for an invention by him of improvements in brackets for car doors. The appellant derives his title from him and his assignees. The defenses are that the invention was anticipated by an earlier patent to Eubank, No. 512,467 and a prior use of similar devices by the Louisville & Nashville Railroad Company, and that the defendants do not infringe. At the hearing upon pleading and proofs, the court held that there was no novelty in the supposed invention; that it was anticipated by the Eubank patent,

and probably by the prior use above mentioned; and, further, that, if the appellant's patent were held valid, the appellees have not infringed it. Thereupon the bill was dismissed.

It appears that, prior to either of the inventions above mentioned, brackets for car doors had long been in use for the purpose of guiding the doors while sliding along the side of the car, and preventing them from opening away from the car at the bottom. Such brackets consisted of cast-iron plates, having a flat inner surface where they came in contact with the car, a horizontal offset a little wider than the thickness of the door, and an upward projection at the outer end of the offset. This upward projection overlapped the outside of the door at the bottom. The brackets were fastened to the side of the car by ordinary screws running into the sill, or by bolts running through it. The door was also equipped with a lock and seal at one side. Depredations by thieves upon the cars, while they were closed and locked, for the purpose of stealing their contents, had become common. Their method of getting into a car was by taking out the screws or bolts by which the brackets were attached. This being done, the lower part of the door was pulled outwardly to a sufficient extent to enable the thief to get in. After getting his plunder, he came out, put the brackets back, and attached them as before. So no indication from the appearance of the car that it had been opened would be given to operators or inspectors. It was the object of these inventions to provide means for attaching the brackets to the car in such a way that they would be inaccessible to the thief when the door was closed. It had been customary to make this attachment by three screws or bolts, the central one being at and somewhat below the middle of the horizontal length of the bracket; and all of them had their heads exposed.

Hill's method, as disclosed by his patent, was to use a lag screw, having a square head, at the middle of the length of the bracket, and countersink it in the outer surface of the bracket, either by forming a square recess in the casting of only a sufficient size and depth to receive the square head of the lag screw, or by raising two parallel projections on the casting, one on each of the two sides of the hole for the screw and far enough apart to take in the head of the screw. In either case, the bracket and the screw were not rotatable upon each other when the head of the latter was sunk in the recess of the former provided for it; nor could the screw be turned by any other means than by turning the bracket, and this could not be done when the door was closed, because the horizontal extension of the bracket would be under the door. The two outside screws might be taken out, and still the bracket be held fast by the middle screw and the bottom of the door. But when the door stands open, and the end screws are removed, the central lag screw may be turned out by revolving the bracket until the head of the screw rises out of the recess, when it may be seized by a wrench. The bracket is attached by turning in the central lag screw until its head is engaged in the recess of the bracket, or driving it in, whereupon the process is finished by revolving the bracket until the latter is brought up to the side of the car, and thereupon turning in the end screws. All this, of course, while the door is standing open. Then

all is ready for sliding it to its closed position. The whole organization is illustrated by figures 2 and 4 of the drawings which are here inserted.

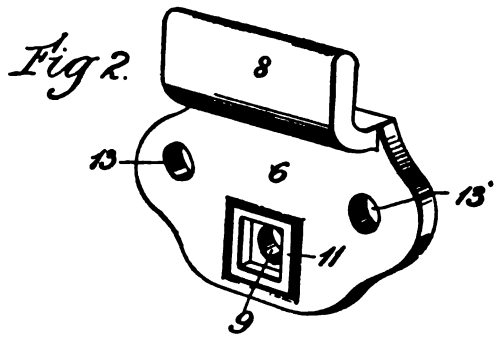

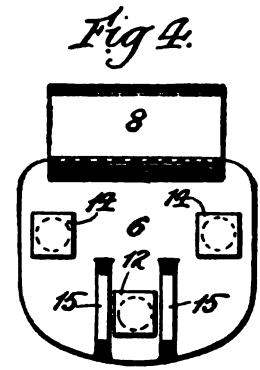

The claims are as follows:

1. The combination, with a sliding door, of a bracket and an attaching screw or bolt having nonrotative engagement with the bracket; said bracket having movable contact with a part of the structure in such manner as to prevent rotation of the bracket, substantially as set forth.

2. The combination, with a sliding door, of a guide bracket engaged and held against rotation by the door and a retaining screw or bolt having nonrotatable engagement with the bracket, substantially as and for the purpose described.

We think there is sufficient ingenuity in this to justify a patent, unless the device had been anticipated; and this is the next question to be considered. The earlier patent to Eubank disclosed one way by which the same result could be accomplished; that is, so attaching the bracket that its fastening was inaccessible when the door was closed. It appears to have been the first one to have accomplished this object. For this reason it embraced a wider range of equivalents than if it had followed other inventions attaining the same result. Nevertheless, Eubank could not usurp the whole field, but would subject all other devices for attaining the same result by employing the same or substantially equivalent means. To be substantially equivalent means, they must perform the same office by a similar organization and mode of operation. Given the problem of making inaccessible the means of attaching the bracket, he adopted this method of organization: He prepared the place for inserting his fastening by boring a hole into the side of the car, and on two opposite sides of the hole made slots extending to the bottom of the hole. Then on the inner side of the bracket he erected a stud, having flanges or projections on the further end adapted to fit the slots at the sides of the hole in the side of the car. These flanges had a narrow beveled edge on one side. In order to effect the attachment, the stud on the bracket was pressed into the hole; the flanges on the further end of the stud passing in through the slots at the sides of the hole. Then, when the stud had reached the bottom of the hole, he turned the bracket a quarter way around. The flanges on the stud, passing out of the slots, entered the wood of

the car sill; the operation ending when each of the flanges was a quarter way around a circle. The bracket was in its place and anchored to the side of the car, and when the door was closed the bracket was immovable, and was held so in precisely the same way as in Hill's patent. Supplementing this description with figures 2 and 4 of the drawings of Eubank, which we here insert, we presume no difficulty will be found in understanding the patent.

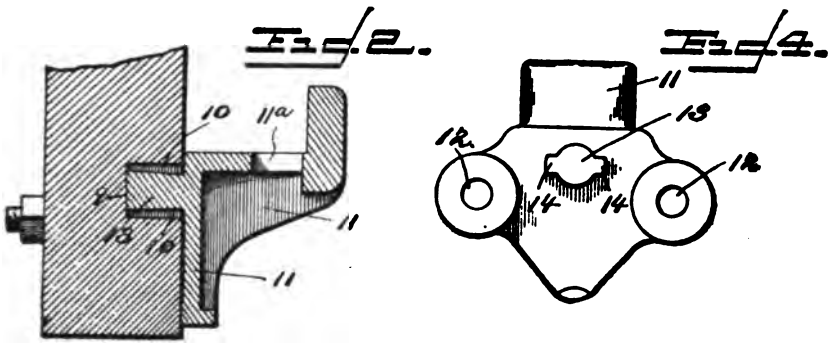

In the Eubank patent, the stud was integral with the bracket, and so was not rotatable upon it. In Hill's patent the bracket and the screw were not rotatable upon each other. They were in two parts; but in their application and effect, when applied, they performed the same office and by the same mode of operation. There was no invention in making two parts or two pieces of the integral member as employed by Eubank. Bundy Mfg. Co. v. Detroit Time Register Co., 94 Fed. 524, 36 C. C. A. 375; D'Arcy v. Staples & Hanford Co., 161 Fed. 733, and the cases cited at page 742, 88 C. C. A. 606. The threads of the screws of Hill's patent performed the same office as the flanges on the stud of the Eubank patent, and are in substance a multiplication of those flanges. Thus the stud with its flanges are in principle the equivalent with the stem of the lag screw and its threads, and in combination with the bracket make the same or an equivalent organization. In both inventions the same result was accomplished. Slight differences no doubt exist, as must always exist where one device is not a mere copy of another. There is more similarity between these two forms than there is between the combination of Hill's patent and that of the defendants which is alleged to infringe it. It seems to us that the Hill device was an infringement of Eubank's, and, if it was so, the latter was an anticipation of Hill's.

Having reached this conclusion it is unnecessary to consider the structure of the bracket in prior use on the Louisville & Nashville Railroad, which we regard as more remote than Eubank's patent, or the question of infringement.

The judgment must be affirmed, with costs.

(173 Fed. 358.)

ST. LOUIS & S. F. R. CO. v. SUMMERS et al.

(Circuit Court of Appeals, Eighth Circuit. October 11, 1909.)

No. 2,982.

1. RAILROADS (§ 338*)—INJURY TO PERSONS AT CROSSINGS—GROUNDS OF LIABILITY.

The rule is well settled that, notwithstanding such contributory negligence of a traveler in crossing railroad tracks as will preclude recovery for any primary negligence of the railroad company in operating its trains so as to cause his injury, he may still recover if, after actually discovering that he was in imminent peril, the railroad company by the exercise of ordinary care could have prevented his injury and failed to do so; but in such case some new act of negligence must arise to create the cause of action, and must be established by proof, unaided by the former acts, which have been excused by the traveler's contributory negligence.

[Ed. Note.—For other cases, see Railroads, Cent. Dig. §§ 1096–1099; Dec. Dig. § 338.*]

2. RAILROADS (§ 320*)—ACCIDENTS AT CROSSINGS—NEGLIGENCE.

The fact alone that those in charge of a railroad train observe a person driving with a team toward a crossing ahead of the train is not sufficient to apprise them that he is in danger, or to charge them with negligence for not stopping the train; but they have the right to presume that the traveler will stop before reaching the crossing, as the law requires.

[Ed. Note.—For other cases, see Railroads, Cent. Dig. § 1016; Dec. Dig. § 320.*]

In Error to the Circuit Court of the United States for the Eastern District of Oklahoma.

Action by Alfred Summers, special administrator of the estate of Hattie Magar, deceased, and others, against the St. Louis & San Francisco Railroad Company. Judgment for plaintiffs, and defendant brings error. Reversed.

A passenger train, operated by the defendant company and running eastwardly at a rate of speed variously estimated at 10, 15, 25, and 30 miles an hour through the town of Ada, in the Indian Territory, came into collision at a street crossing with a team driven by David Magar, and he was killed. His widow and minor children instituted this suit to recover damages. They charged in their complaint that the railroad company was negligent in operating its train at an excessive rate of speed, in violating a speed ordinance of the town, in failing to keep a proper lookout, in failing to stop the train before it reached the crossing, and that as a result of these acts of negligence Magar lost his life and they were damaged. The defendant denied the acts of negligence, and pleaded contributory negligence as its defense. In the course of the trial it became manifest that the plea of contributory negligence had been sustained, and the trial court so instructed the jury, but submitted the cause on the sole issue whether, notwithstanding the contributory negligence of Magar, the railroad company might, after discovering his peril, by the exercise of ordinary care, have avoided a collision and prevented the death. Defendant at the close of the plaintiffs' evidence moved for an instructed verdict in its favor, on the ground that there was no substantial evidence to support a verdict for plaintiffs on this issue. This motion was denied. Defendant reserved proper exceptions to the ruling and declined to offer any testimony in its behalf. A verdict and judgment in favor of plaintiffs followed, and defendant now prosecutes error.

E. T. Miller (W. F. Evans, on the brief), for plaintiff in error.

Clinton A. Galbraith, Tom D. McKeown, and A. C. Cruce, for defendant in error.

Before HOOK and ADAMS, Circuit Judges, and CARLAND, District Judge.

ADAMS, Circuit Judge (after stating the facts as above). The facts, we think, show that the trial court was right in holding that the decedent was guilty of such contributory negligence as precluded plaintiffs' recovery by reason of any of the primary acts of negligence complained of, even if they were established, and no complaint is made of that ruling by plaintiff.

This leaves for our consideration the sole question whether there was any evidence to support the finding necessarily made by the jury that defendant railroad company could, by the exercise of ordinary care, after discovering that the decedent was in a situation of peril and danger, have avoided injuring him. The rule is well settled that, notwithstanding such contributory negligence of a traveler in crossing a railroad track as precludes recovery for the primary negligence of the railroad company in operating its train so as to bring about a collision with him, yet another and different cause of action arises in favor of the traveler if for any reason he is exposed to imminent peril and danger, and the railroad company, after actually discovering that condition, could, by the exercise of ordinary care, have stopped its train, or otherwise have avoided injuring him, and failed to do so. Chunn v. City & Suburban Railway, 207 U. S. 302, 28 Sup. Ct. 63, 52 L. Ed. 219; Denver City Tramway Co. v. Cobb, 164 Fed. 41, 90 C. C. A. 459. But in the application of this rule care must be taken to avoid undermining the rule of contributory negligence. Such negligence of the traveler in law fully exonerates the railroad company from the consequences of its original negligence, and some new and subsequent act of negligence must arise to create a cause of action; and this new or secondary act must be established by proof, unaided by the former acts, which have been excused by the traveler's contributory negligence.

Let us therefore inquire whether the servants of the railroad company had actual knowledge of the peril of the decedent, and whether with that knowledge they exercised reasonable care to avoid injuring him. The decedent, at the time he was killed, was engaged in hauling freight at or near the depot in Ada. He was driving a two-horse team southwardly along Townsend avenue, had just driven across one track, called the "mill track," 157 feet north of the main track, and another track, called the "house track," 50 feet north of the main track; and, as his horses reached the main track, an east-bound passenger train struck them, and he was thrown from his wagon, receiving injuries from which he died. There were five witnesses to the accident. Four of them stated that the decedent drove his freight wagon slowly across the mill track and house track, and towards the main track, looking generally in a southern or southeastern direction towards a switch engine, which was standing still on a switch track running south

and parallel with the main track. One witness stated that Magar was trying to hold his horses down, which, he says, were "kind of frightened" at the engine over on the switch track; but, when pressed to tell what Magar did, said:

"I disremember exactly, only he kind of made a haul like this (indicating) on his lines."

This evidence, and such evidence as this, is too vague and uncertain, especially when taken with that of the four other witnesses to the accident, which give no such account, to establish any state of peril on the part of Magar which would be reasonably observable by the engineer in charge of the train.

But it is argued that the engineer sounded three or four short whistles when between 300 and 350 feet of the crossing, and that a man on the side of the engine usually occupied by the fireman was seen, at some undisclosed distance from the crossing, to wave his hand out of the window. These facts, together with the fact that the engineer could have seen the crossing, and have seen Magar approaching, a sufficient time to enable him to stop his train before reaching the crossing, are relied on as proof of actual knowledge and appreciation of Magar's danger by the engineer; but they are clearly insufficient for that purpose. There is no showing why the short whistles were sounded, and certainly none that they were sounded because of Magar's danger. Common experience suggests that they were most likely the usual and customary signals given by engineers in charge of railroad trains at the approach of crossings. The waving of the hand from the fireman's window might have been for many purposes other than a recognition of Magar's danger. It may be that the engineer might have seen, and should be presumed to have seen, Magar approaching the main track; but this would constitute no evidence that his peril was appreciated. Common observation and experience teach that men engaged in hauling freight about railroad stations frequently approach close to the tracks with their teams and stand there while trains pass near them. Engineers in charge of trains must be presumed to be familiar with this practice, and to operate their trains in the light of it. It would constitute a serious embarrassment to traffic, if engineers should be required to stop or slow up upon seeing the approach of a wagon to the tracks. They have a right to presume that the drivers will observe the precaution which the law imposes upon them as a duty, and keep off the tracks on the approach of trains.

In the recent case of Illinois Cent. R. Co. v. Ackerman, 144 Fed. 959, 76 C. C. A. 13, we had before us a case similar to this. We there held that the men in charge of a train were not obliged to anticipate the negligence of a traveler. We said:

"They could very well have assumed either that he [the traveler] knew of the approach of the cars and intended to stop at the customary safe distance, or that he would look when near the track and then stop before going upon it."

That case controls this.

The judgment must be reversed, and the cause remanded for a new trial in harmony with the views herein expressed. It is so ordered.

(173 Fed. 915.)

ILLINOIS CENT. R. CO. v. NELSON.

(Circuit Court of Appeals, Eighth Circuit. October 25, 1909.)

No. 2,902.

1. RAILROADS (§ 338*) — ACCIDENTS AT CROSSINGS — CONTRIBUTORY NEGLIGENCE — INJURY AVOIDABLE NOTWITHSTANDING CONTRIBUTORY NEGLIGENCE.

Under the rule that a railroad company may be liable for the injury of a person at a crossing, notwithstanding his contributory negligence, if after actually discovering his peril the servants of the company could by the exercise of ordinary care have avoided his injury, but failed to do so, the company cannot be held liable if such failure resulted from a defect in appliances of the train, which existed previously, and which made it impossible to stop the train in time, notwithstanding the efforts of the trainmen.

[Ed. Note.—For other cases, see Railroads, Cent. Dig. §§ 1096–1099; Dec. Dig. § 338.*]

2. RAILROADS (§ 338*)—ACCIDENTS AT CROSSINGS—CONTRIBUTORY NEGLIGENCE —INJURY AVOIDABLE NOTWITHSTANDING.

Plaintiff's intestate negligently walked upon a railroad crossing immediately in front of a freight train, which was being backed toward the crossing at a speed of four or five miles an hour, and was knocked down between the rails, and two or three cars passed over him, causing his death. It was claimed by plaintiff that he was not killed until struck by the second car, and that the train could have been stopped before such car reached him by the exercise of proper care after his danger was discovered; but the evidence left both of such questions in doubt. It was further shown that, as soon as the brakemen on the cars saw that deceased was about to step upon the track, they shouted warnings to him, and also signaled the engineer, and that as soon as the latter saw the signals he did everything possible to stop the train; but he was not certain that he saw the first signal, nor was it certain that the failure to stop within a shorter distance was not due to defective brake appliances. *Held*, that such evidence did not warrant a recovery against the company; the negligence of deceased being conceded.

[Ed. Note.—For other cases, see Railroads, Cent. Dig. § 1099; Dec. Dig. § 338.*]

In Error to the Circuit Court of the United States for the District of Nebraska.

Action by Benjamin Nelson, administrator of the estate of Henry C. Miller, deceased, against the Illinois Central Railroad Company. Judgment for plaintiff, and defendant brings error. Reversed.

William Baird (W. S. Kenyon, Thomas D. Healy, and J. M. Dickinson, on the brief), for plaintiff in error.

Francis S. Howell (Albert W. Jefferis, on the brief), for defendant in error.

Before HOOK, Circuit Judge, and RINER and AMIDON, District Judges.

HOOK, Circuit Judge. This writ of error assails a judgment obtained by the administrator against the railroad company for negligently causing the death of Henry C. Miller. About 11 o'clock in the forenoon of a bright, clear day the deceased, who was 44 years of

age, in the full possession of his faculties, and familiar with the locality, with no obstacle to his view of an approaching train, walked directly in front of it, and was run over and killed. It is not important whether the company was negligent in the first instance. The contributory negligence of the deceased was admitted in the petition, and the plaintiff, his representative, relied for recovery upon what is sometimes termed the "last chance rule." In the case of St. L. & S. F. R. Co. v. Summers (decided at this term) 173 Fed. 358, 97 C. C. A. 328, Judge Adams, speaking for the court, said:

"The rule is well settled that, notwithstanding such contributory negligence of a traveler in crossing a railroad track as precludes recovery for the primary negligence of the railroad company in operating its train so as to bring about a collision with him, yet another and different cause of action arises in favor of the traveler if for any reason he is exposed to imminent peril and danger, and the railroad company, after actually discovering that condition, could by the exercise of ordinary care have stopped its train, or otherwise have avoided injuring him, and failed to do so. Chunn v. City & Suburban Railway, 207 U. S. 302, 28 Sup. Ct. 63, 52 L. Ed. 219; Denver City Tramway Co. v. Cobb, 90 C. C. A. 459, 164 Fed. 41. But in the application of this rule care must be taken to avoid undermining the rule of contributory negligence. Such negligence of the traveler, in law, fully exonerates the railroad company from the consequences of its original negligence, and some new and subsequent act of negligence must arise to create a cause of action; and this new or secondary act must be established by proof unaided by the former acts, which have been excused by the traveler's contributory negligence. Let us, therefore, inquire whether the servants of the railroad company had actual knowledge of the peril of the decedent, and whether with that knowledge it exercised reasonable care to avoid injuring him?"

To bring his case within this rule of law, the plaintiff introduced witnesses who testified to the following facts: The train was composed of 16 freight cars, of which 9 were loaded and 7 empty. Seven were equipped with air brakes, and 9 not. They were being backed southward towards a street crossing at a speed of 4 or 5 miles an hour; the engine being at the north end. The deceased was walking westward towards the crossing upon the north side of the street; but his intention to cross the track in front of the cars was not discovered until too late. He was knocked prostrate between the rails, and was finally taken out 70 feet or so further south, and from under either the second or the third car, according to which of conflicting accounts is true. When it became apparent deceased was about to go upon the track, the brakemen on the cars hallooed and whistled to warn him, and then gave and repeated emergency signals. The engineer, with all possible speed after he received the signals, shut off steam, reversed the engine, applied the air, and let sand upon the rails. He said he did everything possible, and stopped as quickly as he could. The engine and its appliances were in good order. Witnesses testified for the plaintiff that under the conditions which were described the train could have been stopped within from 12 to 20 feet; whereas, it actually ran more than 100 feet after the collision. Deceased, when first struck, was knocked 4 or 5 feet, and fell between and parallel with the rails, with his head to the south. He lay face downward in that position until the first car had passed over him, and was then picked up and rolled by the trucks of the second, and also by those of the third, according to some witnesses, and was mutilated by the wheels.

As the verdict was for the plaintiff, the case is stated as above from his standpoint. It should be added that the engineer, who was introduced as a witness for the plaintiff, testified that he had just been engaged in some other duty about the engine, and did not know whether he received the first emergency signal. Witnesses for the company said that after the receipt of the signal a stop in three car lengths would have been a very good one. The only evidence of negligence after the discovery of the danger of deceased was the bare fact that the train ran further than the distance within which plaintiff's witnesses said it could have been stopped, and it is claimed that the fatal injuries were inflicted, not by the collision with the first car, but by the trucks and wheels of the car or cars which followed it. But the running of the train beyond the shorter distance must not only have been the cause of the fatal injuries, but must have resulted from some negligent act or omission after the dangerous position of deceased was discovered. Counsel for plaintiff appreciate this, and say:

"We do not want the court to get the notion that we contend, had the death of Miller resulted from the impact itself, or from the fall which it caused, the railroad company would be liable, provided he was guilty of negligence in coming into a collision."

As already stated, the petition disclosed his negligence. The evidence also showed it beyond question. After it became apparent deceased was in danger, the brakemen promptly gave such signals as were within their power, and no charge of negligence can justly be made against them. But, though they discovered the danger, they could not stop the train. All they could do was to give the signals. It is not suggested that the application of hand brakes would have been of any avail. So we must look to the engineer for the negligence within the rule. It does not follow from the mere fact that the train moved the distance it did after the brakemen discovered the danger. Their duty being performed, their knowledge was no more effectual in preventing the accident than would have been that of a flagman at the crossing. The movement of the train was consistent with the undisputed testimony of the engineer that he had been engaged upon some other duty about the engine and did not know he got the first signal of the brakemen, but that when he did get it he acted promptly and did all he could. It should be borne in mind in this connection that, even at the slow speed it is said the train was running, it moved a car length in a few seconds, and brought the trucks of the second car upon the deceased.

Again, the testimony produced by the plaintiff as to the condition of the appliances related to those of the engine, not to the air brakes on the cars, and the failure to stop within the short distance may have been due to a defective condition and operation of the latter, for aught the evidence showed. If so, that would not bring the case within the rule. A defect in mechanical appliances, existing before and continuing until after the injury, not susceptible of being rectified after the discovery of the danger carelessly incurred and before the injury is done, is not supervening negligence within the rule invoked. Were it otherwise, negligence on the part of others would have to be anticipated

and provided for in adopting precautions to prevent accidents; but that is not in the measure of one's duty.

We should further say that, giving the fullest credence to the unusually minute description of what happened to deceased while under the cars, it closely approaches mere conjecture that he was not fatally injured before the second car reached him. We think defendant's motion for a directed verdict should have been granted.

The judgment is reversed, and the cause remanded for a new trial.

(173 Fed. 22.)

NATIONAL CASH REGISTER CO. v. SALLING.†

(Circuit Court of Appeals, Ninth Circuit. October 4, 1909.)

No. 1,652.

1. APPEAL AND ERROR (§ 702*)—SCOPE OF REVIEW—REQUESTS TO CHARGE—RECORD—INSTRUCTIONS GIVEN.

   The refusal of requests to charge cannot be reviewed on a writ of error, where the bill of exceptions does not contain the entire charge given.

   [Ed. Note.—For other cases, see Appeal and Error, Cent. Dig. § 2938; Dec. Dig. § 702.*]

2. LIBEL AND SLANDER (§ 50½*) — PRIVILEGED COMMUNICATIONS — WRITINGS UNNECESSARILY DEFAMATORY.

   The rule that communications by one having an interest to one having an equal interest are privileged, if made in good faith and without malice, does not protect against a communication which is unnecessarily defamatory.

   [Ed. Note.—For other cases, see Libel and Slander, Cent. Dig. §§ 138–140; Dec. Dig. § 50½.*]

3. LIBEL AND SLANDER (§ 45*)—FALSE STATEMENTS—PRIVILEGE.

   Where plaintiff had resigned his position, and his resignation had been accepted, and his employment terminated, several days before the writing of the letter which purported to discharge him, a communication to defendant's agent, reciting that plaintiff had been discharged from his employment for cause, that defendant would not again give him a position under any circumstances, and that he was "a dirty dog and a traitor," known by the writer to be false, and intended to prevent plaintiff's success in his endeavor to go into business for himself, was not privileged.[1]

4. LIBEL AND SLANDER (§ 34*)—PRIVILEGED SUBJECT—PRIVILEGED COMMUNICATION.

   In the law of libel, the subject may be privileged, while the communication may not.

   [Ed. Note.—For other cases, see Libel and Slander, Cent. Dig. § 113; Dec. Dig. § 34.*]

5. LIBEL AND SLANDER (§ 123*)—PRIVILEGED COMMUNICATION—QUESTION FOR JURY.

   Where there is uncertainty whether the facts which give an alleged libelous communication a privileged character have been established by proof, it is not error to submit such question to the jury.

   [Ed. Note.—For other cases, see Libel and Slander, Cent. Dig. § 362; Dec. Dig. § 123.*]

6. LIBEL AND SLANDER (§ 124*)—INSTRUCTIONS—PRESUMPTIONS AND BURDEN OF PROOF.

   Where a communication was false, known by the writer to be so, and was too defamatory to be privileged, an instruction defining "prima facie"

---

[1] See note at end of case.

† Rehearing denied.

to be that the law assumes the communication was false and unprivileged, that the presumptions were disputable, and that defendant was allowed, where the falsity and unprivileged character of the publication was specifically denied, to establish both by proof, was not error.

[Ed. Note.—For other cases, see Libel and Slander, Cent. Dig. § 367; Dec. Dig. § 124.*]

7. LIBEL AND SLANDER (§ 101*)—PRIVILEGE—BURDEN OF PROOF.
The burden of proof of privilege is on the defendant.

[Ed. Note.—For other cases, see Libel and Slander, Cent. Dig. § 279; Dec. Dig. § 101.*]

8. LIBEL AND SLANDER (§ 112*)—MALICE—EVIDENCE.
Where defendant wrote a letter concerning plaintiff, falsely stating that he had been discharged for cause, that he was "a dirty dog and a traitor," and one whom defendant would not give a position to under any circumstances, and the writer of the letter, in an action for slander, testified that it was part of his business to look out for people going into business in opposition to defendant, and that he had heard that plaintiff was about to go into business for himself, and wrote the letter "to nip plaintiff's proposition in the bud," such facts were sufficient to prove malice.

[Ed. Note.—For other cases, see Libel and Slander, Cent. Dig. § 329; Dec. Dig. § 112.*]

9. LIBEL AND SLANDER (§ 50*)—QUALIFIED PRIVILEGE—GOOD FAITH.
A libelous communication is not qualifiedly privileged, unless made in good faith, with the honest belief that it is true.

[Ed. Note.—For other cases, see Libel and Slander, Cent. Dig. § 149; Dec. Dig. § 50.*]

10. LIBEL AND SLANDER (§ 123*)—GOOD FAITH—QUESTION FOR JURY.
Whether a libelous communication was made in good faith is for the jury.

[Ed. Note.—For other cases, see Libel and Slander, Cent. Dig. § 362; Dec. Dig. § 123.*]

11. LIBEL AND SLANDER (§ 5*)—MALICE—PROOF.
In an action for libel, malice may be inferred from the fact that the defamatory communication was false, and known to be so by him who uttered it.

[Ed. Note.—For other cases, see Libel and Slander, Cent. Dig. § 278; Dec. Dig. § 5.*]

In Error to the Circuit Court of the United States, for the Southern District of California.

Action by C. Z. Salling against the National Cash Register Company. Judgment for plaintiff, and defendant brings error. Affirmed.

In May, 1904, the defendant in error entered into the employment of the plaintiff in error as a traveling salesman within the state of California, and continued in such employment until April 21, 1906. The plaintiff in error, a corporation of the state of Ohio, had its principal place of business in the city of Dayton, and F. L. Ditzler was general manager of all its American agencies for the sale of its goods, and N. F. Thomas was general manager, under his direction, of the business of said corporation in the state of California, and had general charge and control and direction of all such business in that state, including the authority to hire and discharge employés. On April 11, 1906, the defendant in error sent to the plaintiff in error at its home office in Dayton his resignation as an employé. On April 16th Ditzler, in his official capacity as manager, telegraphed to the defendant in error, accepting his resignation, to take effect April 21, 1906, and on the same day wrote him a friendly letter, acknowledging appreciation of his honesty and candor in stating his true reasons for resigning, and expressing "best wishes" for his success in whatever line of work he might engage. On April 21, 1906, said contract of

employment ended. About this time Thomas learned that the defendant in error was about to enter into the business of selling secondhand cash registers at Los Angeles. On April 26, 1906, he wrote the plaintiff in error as follows: "Exercising our option as per our contract with you, I hereby cancel your contract with the National Cash Register Company, to take effect immediately. I have advised the sales department of my action. While you have been in our employ, and while accepting our salary, you have been devoting your time to other work, and in many other ways doing things that warrant me in the action taken herein." On or about May 2, 1906, the plaintiff in error issued, published, and distributed to its agents throughout the United States and Canada a circular letter containing the following: "The company has been obliged to terminate the employment of Mr. C. Z. Salling for cause. We must absolutely forbid Mr. Salling from being received in any of our offices." On July 6, 1909, Thomas wrote to E. B. Wilson, who represented and acted for the plaintiff in error as its agent and had charge of its office and business in Los Angeles, subject to Thomas' control, direction, and supervision, a letter as follows: "I am in receipt of a letter from Mr. Brizzolari, who says he has met Salling, and that Salling has been in conference with Hallar. Salling says he is going into the secondhand cash register and rental business, etc. While neither you nor I have any faith in Salling's ability to get into a business of this kind, it is still our duty to be on the lookout for anything that may injure the company's business. I would therefore ask you to keep this on your mind, and, should you get an opportunity, see Mr. Hallar, telling him this much, at least—that Salling is a man who has been discharged from our employ, and one whom we would not give a position to under any circumstances. I want to say one other thing. I wish you would, upon receipt of this letter, bring it to the attention of Mr. Alexander and Mr. Holmes. I must absolutely forbid Mr. Salling from being received in any of our offices. I know you feel as I do about this matter, and you may act upon my authority if you will. If he calls at your office, I want him told that we do not care for his company, and will be much obliged to him if he would keep away from us hereafter. Please do not fail to do this, as he must not make our office his loafing place. * * * Don't forget my request about Mr. Salling, for I want that dirty dog to understand that he cannot get into a cash register office in district No. 9. There is only one way to treat a traitor, and you know what that way is."

The defendant in error brought an action against the plaintiff in error to recover damages for libel in issuing and publishing the circular letter above referred to, alleging that the same was false and malicious, and was published and circulated with intent to injure the defendant in error in his character, reputation, and standing as salesman and business man. In a second cause of action upon the second letter, the complaint alleged that the Hallar referred to there was X. H. Hallar of Los Angeles, Cal., and that at the time when the letter was published the defendant in error was conducting negotiations with Hallar for the establishment and maintenance of a corset factory, and that while said negotiations were pending the plaintiff in error sent said letter to Hallar for the purpose of creating distrust and suspicion in his mind against the defendant in error; that the letter was received and read by Hallar in July, 1906, and that after he had read it, and solely on account thereof, he broke off negotiations with the defendant in error, and declined to enter into any contract with him, to his damage in the sum of $25,000. The plaintiff in error answered, denying that the plaintiff in error sent notice to Thomas of the resignation of the defendant in error, and denying that the latter ceased to be an employé of the plaintiff in error on April 21, 1906. It admitted that, at about the time when the defendant in error sent in his resignation, the plaintiff in error became informed that he had resigned for the purpose of entering into the secondhand cash register business in the state of California, and that the plaintiff in error regarded such business as conflicting with and interfering with its own business, but denied that it was unfriendly or hostile to the defendant in error on that account. It admitted the distribution of the circular among its agents throughout the United States and Canada, and alleged that it was a privileged communication. Answering the second cause of action, the plaintiff in error alleged that it had not knowledge

whether Hallar received or read the letter of Thomas to Wilson, or that on that account he broke off his said negotiations with the defendant in error, and it denied that said letter was published with intent to injure the defendant in error, and alleged that the same was a privileged communication. Upon the trial of the cause the jury returned a verdict for the plaintiff in error in the sum of $5,000 "as damages on account of the injury and prejudice to plaintiff's good name, reputation, and credit, and in the sum of nothing as punitive and exemplary damages."

Lawler, Allen, Van Dyke & Jutten and Henry S. Van Dyke, for plaintiff in error.

Davis, Kemp & Post and James P. Clark, for defendant in error.

Before GILBERT, ROSS, and MORROW, Circuit Judges.

GILBERT, Circuit Judge (after stating the facts as above). Error is assigned to certain of the instructions given by the court to the jury and to the denial of certain requested instructions. We are precluded from considering the latter, for the reason that the bill of exceptions does not contain the entire charge. For aught that we know to the contrary, the court properly instructed the jury upon all questions involved in the requested instructions.

One of the instructions excepted to is the following:

"Every publication which charges upon or imputes to any person that which exposes such person to hatred, contempt, ridicule, or obloquy, or which causes such person to be shunned or avoided, or which has a tendency to injure such person in his or her occupation, is prima facie false and unprivileged, and implies malice in the author or publisher."

The exception taken to this was that it was erroneous for want of facts rendering it applicable, and that the facts in the case showed that the communications were privileged, and therefore malice would not be implied in the author of them, and because the instruction left it to the jury to decide whether or not the communications were qualifiedly privileged. The rule is that a communication made by one who has an interest to one who has a corresponding interest is privileged, if made in good faith and without malice; but where the communication goes beyond what the case requires, and is unnecessarily defamatory, the person making the same will not be protected. Did the undisputed facts show that the communications in this case came within the rule? The testimony shows, in the first place, that they were false, and known to be false. It was not true that the defendant in error had been discharged from his employment for cause, or that he had been discharged at all. He had resigned his position, his resignation had been accepted, and his employment had terminated, several days before the date of the paper which purported to discharge him. The evidence is that, between the date of his resignation and the issuance of the so-called discharge, knowledge had come to the officers of the plaintiff in error that the defendant in error intended going into a business which would compete with theirs. Therein is to be found the apparent motive of the so-called discharge, and of the communications which became the subject of this action.

It is urged that the plaintiff in error was justified in directing its employés to exclude the defendant in error from its various places of business, in order to prevent his acquiring information which might

be advantageous to him, but detrimental to them, in view of the competing business in which he was about to enter. Undoubtedly this is true. But it does not appear on the face of the communications that such was their purpose. The subject may be one that is privileged, and a communication on that subject be unprivileged. A circular stating that the company had been obliged to terminate the employment of the defendant in error for cause, and that "we must absolutely forbid Mr. Salling from being received in any of our offices," would, upon its face, seem to have been intended only for the purpose of discrediting the defendant in error and injuring his reputation. It went beyond the plain necessity of the situation, and in that respect is not unlike those which were criticised by the courts in Merchants' Ins. Co. v. Buckner, 98 Fed. 222, 39 C. C. A. 19–30, and Landon v. Watkins, 61 Minn. 137, 63 N. W. 615. It would have been error to instruct the jury that such a communication was, upon its face, privileged. Tonini v. Cevasco, 114 Cal. 266, 46 Pac. 103; Merchants' Ins. Co. v. Buckner, 98 Fed. 222, 39 C. C. A. 19.

It was not essential to the protection of the business of the plaintiff in error to cast imputation upon the character of the defendant in error. It would have been sufficient to warn the employés to withhold from him all information regarding the business, and, for that purpose, to exclude him from the company's offices. Had the communications in this case been of that character, it would have been the province of the court to decide whether they were privileged, as was held in Carpenter v. Ashley, 148 Cal. 423, 83 Pac. 444, and other cases cited by plaintiff in error. But it is well settled that, where there is uncertainty whether the facts which give the communication the privileged character claimed for it are established by the evidence, it is not ground to reverse the judgment, if the question is submitted to the jury. 25 Cyc. 747; 13 Enc. of Plead. & Prac. 107; Klinck v. Colby, 46 N. Y. 427, 7 Am. Rep. 360; Howland v. Blake Mfg. Co., 156 Mass. 543, 31 N. E. 656; Nord v. Gray, 80 Minn. 143, 82 N. W. 1082.

Error is assigned to the following:

"The words 'prima facie,' heretofore employed in these instructions, mean that the law presumes that the publication such as there described was false and unprivileged. These presumptions, however, are disputable, and the defendant is allowed, where the alleged falsity or unprivileged character of the publication are specifically denied, as in the present case, to establish both or either of said denials by proof; and, if such proof be made, it justifies the publication, and constitutes a complete defense to the action."

As the bill of exceptions does not contain the whole of the instructions, we are not advised as to the use of the words "prima facie" as theretofore employed in the instructions, and we therefore cannot impute any error to the charge that the law presumes that the publication such as there described was false and unprivileged. The remainder of the instruction correctly states the law.

It is urged that the burden of proof was upon the defendant in error to establish by a preponderance of the evidence that the communication was not in fact privileged by proof of the fact that it involved actual malice, and that proof of actual malice was entirely wanting in the case. But the burden of proving the privilege claimed lies upon the

defendant. 18 Am. & Eng. Enc. of Law, 1031; Schomberg v. Walker, 132 Cal. 224, 64 Pac. 290; King v. Patterson, 49 N. J. Law, 417, 9 Atl. 705, 60 Am. Rep. 622; Ritchie v. Widdemer, 59 N. J. Law, 290, 35 Atl. 825; Newell on Libel and Slander, §§ 71, 72. As we view the record, there was ample proof of malice. There was proof of it in the known falsity of the charge that the company had been obliged to discharge the defendant in error for cause. There was proof of it in the language employed in the letter of Thomas to Wilson, in which Thomas referred to the defendant in error as a "dirty dog" and "a traitor," and particularly requested Wilson to see Mr. Hallar and tell him that the defendant in error "is a man who has been discharged from our employ, and one whom we would not give a position to under any circumstances." The motive is further shown by Thomas' testimony, in which he said:

"It is part of my business to look out for somebody that is going into business in opposition to the company. I was endeavoring to nip Salling's proposition in the bud, you bet. * * * I guess my object in putting the facts before Hallar was so that he would not go into the secondhand business with Salling."

Error is assigned to an instruction in which the court, after affirming the right of an employer to communicate with his employé upon any subject relating to the business in which they are mutually interested, and to communicate with a common employé with reference to the subject-matter of their common employment, said:

"If, however, such statement is known to the party communicating it to be false, such knowledge excludes the existence of good faith, and takes from the communication what otherwise would be its privileged character."

It is urged against this instruction that knowledge on the part of the author of the communication that it is false does not necessarily exclude the existence of good faith, nor take from the communication what otherwise would be its privileged character. To this we cannot assent. In order to the protection of a communication as qualifiedly privileged, it must appear that it was made in good faith, and in the honest belief that it was true. Swan v. Tappan, 5 Cush. (Mass.) 104; Gassett v. Gilbert, 6 Gray (Mass.) 94; Klinck v. Colby, 46 N. Y. 427, 7 Am. Rep. 360; Quinn v. Scott, 22 Minn. 456. And the question whether the communication was made in good faith is one of fact for the jury. Bacon v. Michigan Central R. R. Co., 66 Mich. 166, 33 N. W. 181, and cases there cited.

It is contended that the court erroneously instructed the jury in charging them that damages might be recovered in such an amount as the jury might find would fairly compensate the defendant in error for the injury done him, "regardless of the defendant's motives in making the publication, and without actual proof of the opinions of witnesses or otherwise as to the extent of the loss." It was objected to this instruction that actual malice must be established by actual proof, by testimony or otherwise. If it is meant by this that, in order to recover damages in such a case as this the plaintiff must adduce proof of express malice on the part of the defendant, the objection was not well taken. Malice may be inferred from the fact that the defamatory communication was false, and known to be false by him who uttered

it. White v. Nicholls, 3 How. 266, 11 L. Ed. 591; Noonan v. Orton, 32 Wis. 106; Bacon v. Mich. Cent. R. R. Co., 66 Mich. 166, 33 N. W. 181; Locke v. Bradstreet Co. (C. C.) 22 Fed. 771; Gassett v. Gilbert, 6 Gray (Mass.) 98. In White v. Nicholls et al., 3 How. 287, 11 L. Ed. 591, the court approved the following from the opinion in Wright v. Woodgate, 2 Cromp., M. & R. 573:

"A privileged communication means nothing more than that the occasion of making it rebuts the prima facie inference of malice arising from the publication of matter prejudicial to the character of the plaintiff, and throws upon him the onus of proving malice in fact, but not of proving it by extrinsic evidence only. He has still a right to require that the alleged libel itself shall be submitted to the jury, that they may judge whether there is evidence of malice on the face of it."

The record contains assignments of error to the rulings of the court as to the admissibility of testimony. We find no error in them, and, as they are not discussed in the brief of the plaintiff in error, we deem it unnecessary to discuss them here.

Finding no error for which the judgment should be reversed, we affirm the same.

NOTE.

Communications by or between Persons Having a Common Interest as Privileged.

I. In General.

[a] (Fla. 1908) To be privileged a publication must be by and to only those who have a right, or interest in the subject. The publication must be of a character, and made without malice in a manner and on an occasion to properly serve the right, duty, or interest of the parties, and not to needlessly injure another.—Briggs v. Brown, 46 South. 325.

[b] (Ga. 1905) Where one publishes a statement in the protection of his own rights or those of another, it must be no broader and the publication no wider than the interest to be subserved demands, and should not be made to those wholly without interest in the matter.—Sheftall v. Central of Georgia Ry. Co., 123 Ga. 589, 51 S. E. 646.

[c] (Ky. 1883) The rule that every one who believes himself possessed of knowledge which, if true, may affect the rights of another, may in good faith communicate such knowledge to that other, applies to cases only where the parties stand in peculiar relation to each other, as principal and agent, father and son, and does not authorize one, to publish broadcast his belief that another's reputation is such that he cannot be believed on oath, although the publication be made in good faith.—Nix v. Caldwell, 81 Ky. 293, 5 Ky. Law Rep. 275, 50 Am. Rep. 163.

[d] (Ky. 1909) A statement confidentially and in good faith, by a person whose property has been destroyed by fire, of one whom he suspects to be the incendiary, in an effort to get advice and assistance from a friend whose property also has been injured, is a privileged communication.—Edwards v. Kevil, 118 S. W. 273.

[e] (Mich. 1889) In the law of libel and slander a qualified privilege exists in cases where some communication is necessary and proper in the protection of a person's interest; but this privilege may be lost if the extent of its publication be excessive.—Smith v. Smith, 73 Mich. 445, 41 N. W. 499, 3 L. R. A. 52, 16 Am. St. Rep. 594.

[f] (Mo. 1909) A qualified privilege in the law of libel extends to all communications made bona fide on any subject-matter in which the person making them has an interest, or in reference to which he owes a duty to a person having a corresponding interest or duty of a moral or social character of imperfect obligation.—Holmes v. Royal Fraternal Union, 121 S. W. 100.

[g] (Pa. 1904) A statement made in good faith, relating to a subject in which the person making the communication is interested or in regard to

which he has a social or moral duty, when made to one having a like interest or duty, is privileged.—Echard v. Morton, 26 Pa. Super. Ct. 579.

II. BETWEEN RELATIVES.

[a] (Ky. 1880) One whose house has been set on fire may, with proper precaution and without malice, communicate to his family his suspicions as to who did it, without becoming liable to one wrongfully accused.—Campbell v. Bannister, 79 Ky. 205.

[b] (Wash. 1896) Where matter alleged to be libelous was contained in a letter written by defendant to his mother, and its only publication was by sending the letter to his mother by mail, the communication was conditionally privileged, and it was incumbent on plaintiff to establish malice on the part of defendant.—Kimble v. Kimble, 14 Wash. 369, 44 Pac. 866.

III. AFFECTING TENANTS.

[a] (N. Y. 1908) A statement made by a police captain to a landlord that plaintiff's family were disorderly, and kept a disorderly house in an apartment rented from the landlord and situated in the captain's precinct, was prima facie privileged under the rule that a communication made in good faith on any subject in which the person communicating has an interest or a duty is privileged, if made to one having a corresponding interest or duty, though containing matter which, without the privilege, would be actionable slander, and though the duty be a moral or social, and not a legal, one.—Morton v. Knipe, 128 App. Div. 94, 112 N. Y. Supp. 451; Id., 128 App. Div. 890, 112 N. Y. Supp. 455.

(b] (Wash. 1909) Certain physicians in an office building prepared a petition to the owners for the expulsion of tenants described as osteopaths, neuropaths, autopaths, chiropractors, uptomtereists, unprofessional masseurs, criminal practitioners, medical institutes, advertising specialists, patent medicine fakirs, quacks, charlatans, and other fraudulent concerns. The publication was not confined to the parties in interest, but was given to the newspapers and published at large, and the communication itself went far beyond the necessities of the case. *Held* that, even though the communication would be otherwise privileged, privilege was no defense to an action for libel instituted by an osteopathic physician occupying offices in the building.—Lathrop v. Sundberg, 104 Pac. 176.

IV. BUSINESS INTERESTS IN GENERAL.

[a] (U. S. 1858) The report by the officers of a corporation to the stockholders of the result of their investigation into the conduct of their officers and agents, with their conclusions upon the evidence collected by them, is a privileged communication, in the absence of any malice or bad faith; but the privilege extends only to making the report, and not to the preservation of it in the form of a book for distribution among the stockholders and in the community.—Philadelphia, W. & B. R. Co. v. Quigley, 62 U. S. (21 How.) 202, 16 L. Ed. 73.

[b] (U. S. 1897) Communications, made by a stockholder of a corporation to an officer thereof, of matters concerning its employés, which, if true, are proper to be so communicated, are privileged.—Scullin v. Harper, 24 C. C. A. 169, 78 Fed. 460.

[c] (U. S. 1899) A letter written by defendant on a matter of business in which defendant was interested, and in reply to a communication from the person to whom it was addressed, is not a privileged communication, so far as relates to charges therein made derogatory to the character of third persons, which charges were not necessary to a statement of defendant's position in regard to the business to which the correspondence related.—Merchants' Ins. Co. of Newark, N. J., v. Buckner, 39 C. C. A. 19, 98 Fed. 222.

[d] (U. S. 1889) Statements made before a meeting of the stockholders of a railroad company by a member, attributing drunkenness and incapacity to one of the officials, are privileged if made in good faith; and the fact that attorneys of the company, not stockholders, were present at the meeting, at the request of the president and some of the stockholders, does not take away the privilege. But if such words were spoken to the attorneys, or to other persons not entitled to hear them, and were not addressed to the stockholders'

meeting, they are actionable.—Broughton v. McGrew (C. C.) 39 Fed. 672, 5 L. R. A. 406.

[e] (Colo. 1905) The privilege connected with a communication from one officer of a corporation to another on the subject of the conduct of one of its servants is not lost by the officer receiving it disclosing its contents to another servant as a reason why the servant about whom it was written was discharged.—Denver Public Warehouse Co. v. Holloway, 34 Colo. 432, 83 Pac. 131, 114 Am. St. Rep. 171.

[f] (Fla. 1887) A publication in regard to business, made by one interested therein, and only to others also interested, is privileged; and the privilege furnishes a good defense in a suit for libel, unless it can be shown that the publication was made from express malice, in which case the privilege does not avail. But publication to others than those interested would not be privileged.—Montgomery v. Knox, 23 Fla. 595, 3 South. 211.

[g] (Iowa, 1900) A communication by a life insurance company to its soliciting agent with relation to an alleged forgery by an examining physician of the signature to an application for insurance, and informing him that another physician would be appointed to make examinations, being upon a subject relating to the agency, and in respect to which there is a mutual interest, is privileged.—Nichols v. Eaton, 110 Iowa, 509, 81 N. W. 792, 47 L. R. A. 483.

[h] (La. 1882) The defendant's wife, a stockholder in a street railway company, informed her husband that she had heard persons boast that a car of the company, driven by the plaintiff was "a good dead-head car" for them, and the defendant informed the foreman of the company, who thereupon, without investigation or notice dismissed the plaintiff. *Held*, that an action of slander would not lie; there being no proof of actual malice.—Haney v. Trost, 34 La. Ann. 1146, 44 Am. Rep. 461.

[i] (La. 1884) A new Orleans firm, in private correspondence with a New York house, repeated information received from its own correspondent at Mobile as to a firm at Mobile, as follows: "D. & Co. are people of no standing or credit whatsoever. Neither have they any means. Up to last July they were dealers in chickens, eggs, etc. Since that time they have been buying cotton quite freely, to the general astonishment of the community. * * * We told them we could never touch their bills again, unless they wrote us a letter stating their means, and which we would forward to your good selves subject to your approval. They were furious enough, but up to now we never received that promised letter." *Held*, that the matter was privileged.—Dunsee v. Norden, 36 La. Ann. 78.

[j] (La. 1909) A letter written to the attorneys of another, relating to the business in hand, is a privileged communication.—Dickinson v. Hathaway, 48 South. 136.

[k] (Mass. 1902) Plaintiff, having a patent for a switch operating mechanism, granted defendant an exclusive license to sell it throughout the United States, and covenanted, if he devised "further improvements in switch operating mechanism for railway cars," to disclose the same to the defendant, and on its request grant a like license, etc. Plaintiff having subsequently patented another switch operating mechanism, during the progress of negotiations for the sale thereof the purchasers wrote to defendant, stating that a mechanism had been placed on one of their switches patented by S., with a view to selling the same, and that the defendant was said to be interested in the device, and requested an answer, whereupon defendant replied that it owned the right to manufacture and sell the "S. electric switch," and would be pleased to consider an offer for the sale of such right, after receiving which letter the purchasers refused to deal further with plaintiff. *Held* that, since defendant had reasonable grounds for its claim as to such patent, the contents of the letter were privileged, and not libelous.—Squires v. Wason Mfg. Co., 182 Mass. 137, 65 N. E. 32.

[l] (Mich. 1908) Where a druggist and a physician had an arrangement whereby the physician agreed to have all his prescriptions filled in the store of the druggist, who agreed to pay a part of the office rent of the physician, the druggist had an interest in the business of the physician, and a communication by him to the physician, with respect to the female employé in the physician's office, was qualifiedly privileged, for which no action would lie unless

made maliciously.—Trimble v. Morrish, 152 Mich. 624, 116 N. W. 451, 15 Detroit Leg. N. 208.

[m] (Mo. 1899) A debtor borrowed money from plaintiff to liquidate a debt to defendant, which plaintiff arranged with a bank to pay on presentation to it by defendant of the debtor's notes. There was some delay, due to defendant's failure to comply with instructions given, during which defendant wrote his debtor: "We know S. [plaintiff] very well, and firmly believe he has misinstructed his St. Louis bank here in order to make interest on your money. We sincerely hope, for your own good, and ours, too, that you will never have anything more to do with S., when the business has to come through our hands, as we do not like his business methods, and we are afraid to deal with him." *Held*, that the communication was not privileged, for the terms employed were unnecessary, even if used in a matter of common interest between defendant and his debtor.—Sullivan v. Strahorn-Hutton-Evans Commission Co., 152 Mo. 268, 53 S. W. 912, 47 L. R. A. 859.

[n] (N. J. 1891) A communication made by the cashier of a bank to a stockholder with reference to the solvency of the plaintiff, who was surety upon an official bond to the bank, is privileged; and it is not necessary, to justify the communication, that it be in response to an inquiry made by the stockholder.—Rothholz v. Dunkle, 53 N. J. Law (24 Vroom) 438, 22 Atl. 193, 13 L. R. A. 655, 26 Am. St. Rep. 432.

[o] (N. Y. 1829) A bank director is not justified in making a communication to a co-director in the public streets affecting the credit of a merchant, where there is no evidence of such communication being confidential; but he might make such a communication to the board of directors in relation to one of the customers of the bank.—Sewall v. Catlin, 3 Wend. 291.

[p] (N. Y. 1902) Where a surety company, which had bonded a collector, was informed by his employer that he had failed to turn over money, or to explain his neglect, when requested, letters written by the company to the parties who had vouched for the collector's integrity when he applied for his bond, stating that it had been informed that the collector had disappeared, and would be obliged for information which might aid in locating the "defaulter," were privileged, and, in the absence of malice, would not support an action for libel.—Ginsberg v. Union Surety & Guaranty Co., 68 App. Div. 141, 74 N. Y. Supp. 561.

[q] (N. C. 1903) A communication between an employer and employé is protected as privileged where it is made bona fide about something in which the writer has an interest or duty, and the person addressed an interest or duty, and the statement is made in protection of that interest or duty, and in his honest belief of the truth; and, where such facts exist, the communication is not libelous, unless the party spoken of can show malice.—Harrison v. Garrett, 132 N. C. 172, 43 S. E. 594.

[r] (R. I. 1891) In an action for libel, it appeared that defendant, who had been plaintiff's partner, wrote to a customer that plaintiff had sold out to him, and stated: "And now that he has embezzled from the company, and is in the hands of the law, he is endeavoring to do us harm," etc. Defendant, after moving for a nonsuit, attempted to prove the truth of the letter, but the jury found for the plaintiff, and that when the letter was written he was still a partner. *Held*, that the privilege of the letter, on the ground that it was to a customer on a matter of common interest, was subject to rebuttal by proof of actual malice.—Tillinghast v. McLeod, 17 R. I. 208, 21 Atl. 345.

[s] (Tex. 1893) A statement by a railroad to consignors that certain goods shipped by them remained undelivered because consignees were unable to pay the freight, made by one railroad to another, and by it to the consignor, is privileged; and the mere fact that it is not true does not, in the absence of malice, make the party originating it liable.—Campbell v. Bostick (Civ. App.) 22 S. W. 828.

[t] (Tex. 1897) A communication relating to a business matter in which the party making it is interested, and sent only to persons concerned in the matter, being privileged, recovery cannot be had thereon in the absence of proof of malice and of actual damage.—Gulf, C. & S. F. Ry. Co. v. Floore (Civ. App.) 42 S. W. 607.

[u] (Wash. 1906) A stockholder of a corporation wrote a letter to another stockholder with reference to the conduct of an officer of the corporation. The

letter charged that the officer was seeking to wreck the corporation, that he had turned over worthless land for $1,000, and that he had become "a little daft." *Held* that the contents of the letter did not show anything that would render the communication not privileged.—Chambers v. Leiser, 43 Wash. 285, 86 Pac. 627.

[v] (Wash. 1906) While it is libelous for a person or association to attempt to coerce the payment of debts by holding the debtors out to the world as being dishonest and unworthy of credit, or to publish their names in circulars, pamphlets, and books for distribution among dealers as persons who have contracted debts and failed to pay them, dealers in a common line are entitled to agree among themselves not to extend credit to a person who has defaulted in a payment to one of them, and hence it is not libelous for one party to the agreement to report to others the names of such of his customers as have become delinquent, especially where the purchaser is informed in advance of his purchase that a denial of further credit will be the consequence of his failure to pay at a required time.—Woodhouse v. Powles, 43 Wash. 617, 86 Pac. 1063.

V. MEMBERS IN CHURCH, LODGE, OR SOCIETY.

[a] (Ga. 1909) Communications made to a secret fraternal benevolent society are privileged if made either pending an investigation into an alleged violation of its by-laws by a member, or in good faith to bring about an investigation and trial.—Graham v. State (App.) 65 S. E. 167.

[b] (Kan. 1900) Where the officers of a church, upon inquiry, find that their pastor is unworthy and unfit for his office, and in the performance of what they honestly believe to be their duty towards other members and churches of the same denomination, publish, in good faith, in the church papers, the result of their inquiry, and there is a reasonable occasion for such publication, it will be deemed to be privileged and protected under the law.—Redgate v. Roush, 61 Kan. 480, 59 Pac. 1050, 48 L. R. A. 236.

[c] (Mass.) The proceedings of the church are quasi judicial, and those who complain, or give testimony, or act and vote, or pronounce the result, orally or in writing, acting in good faith and within the scope of the authority conferred by this limited jurisdiction, and not falsely or colorably, making such proceedings a pretense for covering an intended scandal, are protected by law. —(1824) Remington v. Congdon, 19 Mass. (2 Pick.) 310, 13 Am. Dec. 431; (1850) Farnsworth v. Storrs, 59 Mass. (5 Cush.) 412; (1853) Fairchild v. Adams, 65 Mass. (11 Cush.) 549; (1856) Barrows v. Bell, 73 Mass. (7 Gray) 314, 66 Am. Dec. 479.

[d] (Mass. 1854) A defendant, who is on trial before a quasi judicial tribunal of this description, for alleged offenses against good morals, and conduct inconsistent with his religious profession, is entitled to make a full defense, and is allowed great latitude, so long as he acts in good faith and within the fair scope of repelling and refuting the charges brought against him. A party making such proceedings the vehicle of scandal is not protected by law. But, so long as he confines himself to the subject-matter of his defense, and uses no language which is not pertinent thereto, then, although he may incidentally disparage private character, he is not answerable therefor in an action for damages.—York v. Pease, 68 Mass. (2 Gray) 282.

[e] (Mass. 1875) A communication from one member of a church to another as to rumored criminal conduct of a third *held* not to be privileged.—York v. Johnson, 116 Mass. 482.

[f] (Mass. 1881) A letter to a member of an association of ministers, containing libelous matter concerning another member, and written by a minister not a member of the association, is not privileged.—Shurtleff v. Parker, 130 Mass. 293, 39 Am. Rep. 454.

[g] (Mass. 1899) Where defendant was a church officer and a member of the choir, the members of which were employed under contract, and were in no way responsible for the conduct of each other, communications by defendant made to other members of the choir, and concerning plaintiff as choir director, are not privileged.—Lovejoy v. Whitcomb, 174 Mass. 586, 55 N. E. 322.

[h] (Mich. 1889) Statements made to a minister in his ministerial office are privileged communications.—Vickers v. Stoneman, 73 Mich. 419, 41 N. W. 495.

[i] (Mich. 1899) A statement by an official member at a quarterly conference of the church trustees, called to elect trustees for the ensuing year, in re-

sponse to a question as to why he objected to a certain candidate, where made without malice, and in good faith, is privileged.—Howard v. Dickie, 120 Mich. 238, 79 N. W. 191, 6 Detroit Leg. N. 104.

[j] (Mo. 1904) Defendant was a member of a religious society, and as such owed the moral duty to aid in purging it of immoral or unworthy members, and, to such end, to communicate to it any information he honestly believed to be true, showing immoral conduct by a member. He inquired of H., another member, as to what occurred at a meeting of the society to consider the propriety of bringing charges of immorality against E., a third member, and, after H.'s recital of his own testimony, repeated a statement of E.'s daughter that E. and his housekeeper "were living in sin together." Defendant honestly believed this to be true, and H. was already informed of the supposed fact. No one else was present. *Held*, that defendant's communication to H. concerning the housekeeper was privileged.—Kersting v. White, 107 Mo. App. 265, 80 S. W. 730.

[k] (Mo. 1909) An agent of a fraternal beneficiary association employed to solicit business, take applications, and collect money, collected money which he failed to remit to the association as required by the contract of employment. The agent threatened to sue the association, and to take, on leaving the employment, a large number of the members thereof. Thereafter the association notified members that the agent had been discharged and that he had collected money which he had not remitted, and advising the members to remit to a person named or to the association. The association had examined into the affairs of the agent. *Held*, that the communication was a qualified privileged one.—Holmes v. Royal Fraternal Union, 121 S. W. 100.

[l] (N. J. 1896) A controversy having arisen over the right of a Presbyterian Church to accept plaintiff as their pastor, the presbytery of M., to which the church belonged, had requested the presbytery of N., into which plaintiff had been received, to recall him, and forbid his further intrusion within the boundaries of the former presbytery, and the request had been denied. Defendant, also a clergyman of the Presbyterian Church, in response to a request for an explanation of the dispute, stated to members of plaintiff's church that plaintiff had no right to perform marriages or baptisms, and that he had had trouble with women in every church where he had exercised ministerial functions. *Held*, that the communications were not privileged.—Ritchie v. Widdemer, 59 N. J. Law, 290, 35 Atl. 825.

[m] (N. Y. 1840) When a communication is from a church member to a superior, the burden of showing want of probable cause seems to be on the plaintiff.—O'Donaghue v. McGovern, 23 Wend. 26.

[n] (N. Y. 1891) In an action for slander in uttering words alleged to have been intended to charge plaintiff with rape, or with an attempt to commit rape, it appeared that the parties were soldiers in the United States army, and that the words were spoken to a member of the same company with defendant. *Held*, that such words were not absolutely privileged, so as to authorize a dismissal of the complaint on that ground, but the question of the good faith of defendant should have been decided.—Lally v. Emery, 59 Hun, 237, 12 N. Y. Supp. 785; Id., 79 Hun, 560, 29 N. Y. Supp. 888.

[o] (N. Y. 1896) The publication was privileged, where a church trustee made inquiries concerning the pastor, and received in reply a letter containing defamatory matter, which he showed to the other trustees and to another member of the church in good faith, believing it to be true.—Pendleton v. Hawkins, 11 App. Div. 602, 42 N. Y. Supp. 626.

[p] (N. C. 1850) A. accused B. of theft to certain members of a lodge of Odd Fellows, of which both were members; and, in an action for slander by A., B. attempted to justify what he said by showing that it was the duty of Odd Fellows to keep their lodge pure. The justification was *held* to be insufficient.—Holmes v. Johnson, 33 N. C. 55.

[q] (R. I. 1890) A letter assailing the character of a recently elected honorary member of a medical society, written to the secretary thereof by a delegate thereto, who was also a member, in the bona fide discharge of a duty imposed on him to inform the society of all matters and things relating to the medical profession which in his judgment seemed necessary to maintain the honor and dignity thereof, is a privileged communication.—McKnight v. Hasbrouck, 17 R. I. 70, 20 Atl. 95.

[r] (Tex. 1894) Where a libelous letter, privileged because written of church matters of common interest, stated that the addressee might read it to all he wished, the writer cannot claim that the letter was a privileged communication.—Coles v. Thompson, 7 Tex. Civ. App. 666, 27 S. W. 46.

[s] (Tex. 1900) Proceedings, depriving one of its members of his rights as a member thereof, by a Baptist convention exercising no delegated powers and having no supervisory power over it, but being an independent sovereign body, with nothing in its constitution renouncing its right and power to control its membership, published in the usual and ordinary way, are a privileged communication, whether such member's election was valid, and his credentials regular, or not, since they have the power to refuse membership on any grounds which may seem good and sufficient to the body itself; hence such publications cannot be the subject of an action for libel.—Cranfill v. Hayden, 22 Tex. Civ. App. 656, 55 S. W. 805.

[t] (Vt. 1892) In an action for slander in imputing unchastity to a woman, the fact that the slander was spoken by defendant to one who had formerly been pastor of the church to which plaintiff and defendant both belonged, and in response to inquiries by such former pastor, did not make the speaking a privileged communication.—Carpenter v. Willey, 65 Vt. 168, 26 Atl. 488, 15 L. R. A. 853; Willey v. Carpenter, Id.

[u] (Wis. 1901) A statement by one member of a church to another concerning the chastity of a third, over whom such other party has no power of discipline, is not a privileged communication.—Hocks v. Sprangers, 113 Wis. 123, 87 N. W. 1101, judgment modified (1902) 113 Wis. 123, 89 N. W. 113.

(173 Fed. 28.)

PACIFIC MAIL S. S. CO. v. COMMERCIAL PACIFIC CABLE CO.

COMMERCIAL PACIFIC CABLE CO. v. PACIFIC MAIL S. S. CO.

(Circuit Court of Appeals, Ninth Circuit. September 7, 1909.)

No. 1,687.

1. SALVAGE (§ 16*)—THEORY AND PURPOSE OF REMUNERATION—SERVICES RENDERED UNDER EMPLOYMENT.

The principles which govern the allowance of compensation for a salvage service are not the same where the service is rendered under an employment and where it is volunteered. In the latter case it is more meritorious, and the salving vessel takes the risk of receiving nothing if the service is unsuccessful, and if successful is entitled to a liberal reward; while if employed she is entitled to payment on a quantum meruit in any event, and whether entitled to more in case of success depends on the circumstances and the spirit in which the service is rendered.

[Ed. Note.—For other cases, see Salvage, Cent. Dig. § 29; Dec. Dig. § 16.*]

2. SALVAGE (§ 30*) — AMOUNT OF COMPENSATION — SERVICES RENDERED UNDER EMPLOYMENT.

The steamship Manchuria grounded on a coral reef in the bay of Waimanalo on the northeast side of the island of Oahu, Hawaii. Being unable to free herself with the aid of three other vessels which went to her assistance, the owners' agent applied for the assistance of libelant's cable ship, Restorer, a vessel of 4,000 horse power, then lying idle at Honolulu. Libelant's superintendent stated that she could not go without permission from New York, which was cabled for and obtained. In the meantime the master refused to fire up unless the expense was guaranteed, and such guaranty was given. On receiving permission libelant's agent required a written request for her services, which being given, the Restorer went to the assistance of the Manchuria; but her efforts, added to those of the other vessels, were unsuccessful, and on the next day an expert salvor employed by the underwriters with a powerful wrecking outfit started from San Francisco, arriving nine days after the stranding. In the meantime the Restorer and other vessels had assisted in keeping the

Manchuria in position and from further injury, and she was retained by the expert who took charge of the work, and who understood that she was under employment, until the Manchuria was finally released. Throughout libelant and its representatives worked with a view to making as large a salvage claim as possible. The Restorer was at no time in any special peril, nor did it appear that her services were indispensable to the safety or rescue of the Manchuria. *Held*, that she was entitled to recover for her consumption and loss of stores and expenses on account of the salvage operations, and to a per diem allowance for the time employed, but to no bonus in addition as a purely salvage reward.

[Ed. Note.—For other cases, see Salvage, Cent. Dig. §§ 72–74; Dec. Dig. § 30.*]

Appeal from the District Court of the United States for the Territory of Hawaii.

Charles Page, E. B. McClanahan, and S. H. Derby, for appellant and cross-appellee.

M. F. Prosser, Robbins B. Anderson, and Sidney Ballou, for appellee and cross-appellant.

Before GILBERT and ROSS, Circuit Judges, and HUNT, District Judge.

ROSS, Circuit Judge. The very voluminous record in this cause renders it impossible to review the evidence in detail in an opinion of reasonable length, so that we will not undertake to do more than indicate the grounds upon which we rest our judgment.

The appeal of the Commercial Pacific Cable Company, which was the libelant in the court below, is upon the ground that the amount awarded it by the trial court was inadequate, and that the court also erred in dividing, as it did, costs between the respective parties. What we shall say in respect to the main appeal, which is that taken by the Pacific Mail Steamship Company, the claimant, will dispose of the appeal taken by the libelant as well.

The action was in rem against the claimant's twin screw steamship Manchuria for salvage, and resulted in a decree by the court below awarding the libelant $62,636.80, and dividing the costs between the libelant and claimant. It appears from the record that about 4 a. m. of August 20, 1906, the Manchuria, which was of 13,638 tons gross, and 8,750 tons net, register, ran upon a coral reef in the bay of Waimanalo on the northeasterly side of the island of Oahu, and there stranded. The place of stranding was on the lee shore, several hundred yards from the shore line, and less than a mile from the landing place of the Waimanalo Sugar Company. Waimanalo Bay is an open roadstead with a northern exposure, but at the time of the stranding of the Manchuria the water and sea were moderate, and the time of year was such that storms were not to be anticipated. The city of Honolulu is on the opposite side of the island, about 15 miles distant by wagon road, and within about two or three hours' steaming distance. Immediately upon the stranding of the ship one of its officers was sent to Waimanalo, and by telephone notified Hackfeld & Co., the ship's agents at Honolulu, of the accident. Both the engines of the Manchuria were reversed, and the full power of her propellers used, as

soon as the reef was struck, in an attempt to back off, but without success. Within a few hours thereafter, to wit, about 9 o'clock in the morning of August 20th, the tug Fearless, of 700 horse power, and especially fitted for salvage work, arrived from Honolulu, and by means of a line to the ship attempted to aid in her effort to back from the reef. About 10:45 of the same morning the United States revenue cutter Manning, of 2,500 horse power, and the steamer Maui, of 447 horse power, arrived, and by means of lines therefrom to the distressed ship commenced aiding in the effort to release her. During the afternoon the ship ran out her stream and one bower anchor and emptied her ballast tanks, but still remained stranded. Other vessels during the morning and afternoon came to the assistance of the Manchuria, and were used in transferring her cabin and steerage passengers and their baggage to Honolulu. At the time of the accident the libelant's cable ship Restorer was lying idle, with cold boilers, in the port of Honolulu, where she had been stationed since April 24, 1905. She was a vessel of about 4,000 horse power, of the value of about $600,000, and was maintained by the Cable Company for service in the repairing of its cables in the event of need. In the evening of the day of the stranding of the Manchuria, Hackfeld & Co. asked the master of the Restorer, who was Capt. Combe, and the superintendent of the Cable Company's business at Honolulu, Mr. Gaines, whether the Restorer could be sent to the assistance of the Manchuria. They replied that she could not without express authority from the home office in New York. They were then requested by Hackfeld & Co. to cable for such authority, and while waiting for a reply to get up steam in the Restorer's boilers in order to save time, which they agreed to do provided payment of the expenses of getting up steam was guaranteed them in the event the home office declined to grant the requested assistance. Hackfeld & Co. thereupon gave such guaranty, after which, to wit, about 10:30 p. m. of August 20th, the request was cabled and the Restorer's fires started. The next morning a reply was received authorizing the Restorer to go to the assistance of the Manchuria, whereupon Gaines asked and received from Hackfeld & Co. a written request for the assistance of the Restorer, and at 3:07 in the afternoon of August 21st, that ship left Honolulu for Waimanalo Bay, which she reached about 6 o'clock in the evening, according to the testimony of Capt. Combe. He anchored from a quarter to half a mile from where the Manchuria lay. Being asked by his counsel what he did on his arrival in respect to the Manchuria, Capt. Combe answered:

"I did nothing, sir, until the morning of the 22d. I just sent my chief officer on board that evening when I arrived. Q. Why did you do nothing that night? A. Well, I arrived there at about 6 o'clock in the evening. It being a strange place, and not having any soundings, and on a lee shore, I decided for the safety of the vessel—it was getting on nighttime—that I would stop where I was until daylight. Q. What did you do at daylight? A. I hove up anchor and came up closer to the position of the Manchuria. Q. And then what did you do? A. Gave them a couple of grapnel ropes."

The evidence shows that by far the heaviest damage suffered by the Manchuria was sustained prior to the arrival of the Restorer. The unsuccessful result of the first day's attempts to release the Manchuria

was cabled to the claimant at San Francisco by its Honolulu agents the next day, to wit, August 21st. In doing so the agents gave the claimant this information:

"Manchuria overnight sagged little. Same position. Rolling, pounding heavily. Rough sea. Fresh wind. Making little water; No. 3 starboard one foot, No. 4 port bilge ten inches, in twelve hours. Port engine shaking. Main steam pipe broken 2 a. m. Saddle of double end and single end boilers cracked. Starboard engine moves little in pounding. No signs of hull getting weak. Will secure vessel hold in same position."

In reply they were instructed on the same day that Capt. Metcalfe, Lloyd's and underwriters' agent, and an expert salvor, would leave San Francisco on the 23d with a powerful wrecking outfit, and that he recommended that the ship's anchors be so placed as to prevent the vessel from going further on the reef and twisting broadside, and that the vessel should be kept as deep in water as possible until the anchors should be properly laid; that no part of the cargo should be removed unless it appeared certain that there was no risk of the vessel going further on the reef; that his opinion was that the vessel would have to be floated largely by warping, and could not be pulled off by towing alone. Capt. Metcalfe and his assistant, Capt. Pillsbury, with a large wrecking outfit, reached the Manchuria in the afternoon of August 29th, and thereupon took charge of the salvage operations. In the meantime—that is to say, from the cessation of the unsuccessful attempts to pull her from the reef—the efforts of those in charge of the disabled ship were directed towards holding her in her then position, in which efforts the Restorer participated from and including the morning of August 22d, having during that time four of her grapnel ropes on the Manchuria, which she pulled and stopped pulling as ordered by the Manchuria. These grapnel ropes were ropes of wire wound with hemp, designed for grappling deep sea cable, each having a breaking strain of from 16 to 18 tons. In adjusting them they were wound over the large cable drum of the Restorer, so that they could be taken up inch by inch if necessary, and were adjusted so that they hung in parallel curves, equalizing the strain to some extent. During the same intervening time the steamers Manning and Maui and the tug Fearless rendered service in the same behalf, and the Manchuria herself put out numerous anchors. Extensive soundings were also taken of the waters of the bay surrounding the ship, much of the Manchuria's cargo was shifted, and everything was put in as good condition as possible preparatory to the arrival of Capt. Metcalfe and his outfit. During the same time the Restorer also furnished a grapnel rope to the Manning, which was broken, after which she gave it to the Manchuria to use on her anchors. Capt. Combe, of the Restorer, also participated in the soundings referred to, furnished a chart and cable buoys for running lines over the coral, and assisted in laying anchors.

On the arrival of Capt. Metcalfe he ordered the Restorer's engines stopped and her lines cast off from the Manchuria, and cabled to the claimant's representative in San Francisco to know what arrangement had been made concerning the services of the Restorer, in response to which inquiry he was informed by cable that the Restorer's charges would be adjusted in New York, and to "use as necessary," whereupon

he furnished the Restorer with a 4½-inch plow steel cable in place of her four grapnel ropes, and made such use of her thereafter as he saw fit, in connection with the numerous steam and other craft engaged in the work in hand. The record shows that from the time of Capt. Metcalfe's arrival until the forenoon of September 14th the preparatory work of laying the wrecking anchors, discharging the ship's cargo, and installing additional pumps was vigorously and unremittingly carried on, involving the labor of a large number of men, as well as the assistance of various boats of one kind and another. On the 14th of September an attempt was made to pull the Manchuria from the reef. A strain was put on the moorings laid out from her, and the towing vessels, consisting of the Restorer, Manning, Iroquois, and the tug Eleu, pulled as directed. The result was thus reported by cable on September 14th to the claimant at San Francisco, by Capt. Metcalfe:

"After great difficulties moved Manchuria out 250 feet, altering stern to N. by E. ¼ E.; originally N. by W. Unable to haul vessel's stern to eastward account vessel having twelve degrees port list, burying bilge keel sand and coral. Will keep on heaving, although, owing to vessel going nearly straight astern, most of our anchors are too far to eastward. All coal discharged except sufficient to supply our needs for steam. All prudent water ballast pumped out."

As indicated in this cable, the movement was not in the direction anticipated or desired. Accordingly it was determined to shift the towing vessels more nearly astern, with a view to a further effort to move the ship, which was done under the direction of Capts. Metcalfe and Pillsbury; the tug Eleu being sent to help keep the bow of the Restorer to the wind during the operation, and the sea bottom around the ship's stern being dynamited in order to break up the coral. The Restorer attempted to make the shift without letting go her line to the Manchuria. In making the maneuver the Restorer crossed the bows of the Iroquois further inshore, and was dragging her anchors toward the coral reef, when she finally, by letting out sufficient anchor chain and slacking her towing hawser, was brought under control. The difficult work of warping the vessel from the reef commenced, and about noon of September 16th she was floated, and towed to Honolulu by the Restorer, and, after the making of temporary repairs, sailed to San Francisco under her own steam.

The expenditures in the salvage operations from the time of the stranding of the ship to the time of her release amounted to $126,248.91, not including the services of the United States revenue cutter Manning, nor the services of the tugs Fearless, Iroquois, or Eleu, nor the services of the schooner Melacthon, the towing lighter Pioneer, the steamer James Makee, the steam dredger Pacific, nor the steamship Niihau, nor the fee of Capt. Metcalfe. The permanent repairs to the vessel exceeded $500,000. The original cost of the Manchuria was $2,061,349.42. At the time of the accident she seems to have been valued by the claimant at $1,800,000, although it is contended on the part of the libelant that it was then about $2,563,000. The libelant claimed for the services of the Restorer $300,000, and it was for that sum that it libeled the ship, contending that it was the chief agent in the operations which ultimately rescued her from her perilous position. In respect to that contention the court below said, in its opinion:

"The heavy salvage of $300,000 claimed by the libelant is based upon its theory of the case, as shown by the pleadings and by evidence introduced in support thereof, that the Restorer, as operated by those in charge of her, was the chief agent in the operations which ultimately effected the removal of the Manchuria from her dangerous position to a place of safety. I have no difficulty in finding that this theory is not borne out by the evidence. I need not go into a discussion of the grounds for such conclusion, more than to say that my mind has been irresistibly led by the evidence in the case, and by my examination, with counsel for both parties, of the steam winches of the steamship Mongolia, which were conceded by both sides to be the counterpart of those of the Manchuria, to this view, and to the nearly correlative conviction that to the steam winches of the Manchuria, acting upon anchors fixed upon the sea bottom, was mostly due the work of moving her from the bed in the reef where she was lying, which must be regarded as by far the most difficult and most important part of the salvage operations."

The court below also took notice of the undisputed fact that the libelant was not a volunteer, but contributed the services of the Restorer upon request only, without any specific agreement at the time as to her compensation. Said the trial court:

"This being the case, although libelant would have been entitled to remuneration at law, if not in admiralty, on the basis of quantum meruit, if the salvage operations had failed, yet, success having been achieved, the ordinary principles of salvage compensation would be applied, if its services contributed to the salving of the libelee."

The court below also found against the contention of the libelant that its services were effective in preventing the Manchuria from being carried further towards the shore by the sea from the bed in which she lay when the Restorer arrived. A careful consideration of the record satisfies us that the trial court was quite right in each of the above-mentioned findings in respect to the services of the Restorer; but that court further found that that vessel "was of material assistance to the Manchuria's own anchors in preventing her from swinging to a position more broadside on to the shore than the Restorer found her on the morning of August 22d; was of material service in swinging her stern outward from the shore during the period from August 25th to August 29th, as set forth above, in which movement she was the chief agent, being assisted by the United States revenue cutter Manning during a part of that period, and the four stern anchors of the Manchuria as above stated; was of material service, which, however, is not to be compared with the united power of the steam winches of the Manchuria, in the final operations of September 14th and 16th; and was of material service in towing the Manchuria when floated to the port of Honolulu"—all resulting in a finding and decree "for the libelant in the sum of $5,219.53 for consumption and loss of stores and expenses on account of salvage operations, and in the sum of $56,000 for salvage proper, making a total of $61,219.53."

Based upon the contention that it appeared from the decision of the court that the said award for salvage proper of $56,000 was estimated upon an allowance of $2,000 a day for the services of the Restorer, the claimant asked the court, by motion, to reduce the allowance for salvage proper by $4,000 because of the fact that the Restorer was only engaged in the service for the period of 26 days. The record shows these proceedings upon the hearing of that motion:

"Mr. Olson, of proctors for claimant, read motion to amend decision.

"The Court: Before you go on, I will call your attention to the fact that it is a miscalculation. The court did not calculate it on the basis of $2,000 a day, but for $1,000 a day, and the rest of it is made up by other amounts.

"Mr. Olson: We were unacquainted with that fact. We drew our information from the decision itself.

"The Court: That is 26 days at $1,000 a day, and in addition to that, for the value of its services, there are three items; and it was the other items which made up the balance of the award.

"Mr. Olson: Well, that puts a different face upon the matter entirely.

"The Court: I can understand how such an estimate was made, but I think the estimate of the value of her services, I have it; I think it was $10,000 the value of her services in pulling her off, $10,000 value of her services in swinging her, and $10.000 the value of her services in steadying her; I think it was something like that, making $30,000, in addition to $1,000 per day for 26 days. That would be $56,000."

It thus appears that the allowances made the libelant by the court below for the services of the Restorer were as follows: $5,219.53 for consumption and loss of stores, and expenses on account of salvage operations; $1,000 a day for the time of her employment, to wit, 26 days, and an additional $10,000 for her services in steadying the Manchuria, an additional $10,000 for swinging her, and an additional $10,000 for pulling her. As has been shown, the view of the law entertained by the court in approaching the consideration of the case was that, notwithstanding the fact that the libelant was not a volunteer, but undertook the services only upon express employment, "yet, success having been achieved, the ordinary principles of salvage compensation may be applied, if its services contributed to the salving of the libelee." In holding that "the ordinary principles of salvage compensation" are applicable to such a case, the court below erred.

In Wilmington Transportation Company v. The Old Kensington (D. C.) 39 Fed. 496, 500, which was also a case for salvage, it was said:

"In cases of this nature there is no standard by which can be absolutely measured the compensation to which the party rendering the service is entitled. Each case depends in large measure upon its own circumstances. While it is perfectly true that salvage is not a 'question pro opere et labore, but rises to a higher degree and takes its source in a deeper policy,' there is a broad distinction, as said by Dr. Lushington, 'between salvors who volunteer to go out and salvors who are employed by a ship in distress. Salvors who volunteer go out at their own risk for the chance of earning reward, and if not successful they are entitled to nothing, the rule being that it is success that gives them a title to salvage remuneration. But if men are engaged to go out to the assistance of a ship in distress they are to be paid according to their effort, even though the labor and service may not prove beneficial to the vessel or cargo.' The Undaunted, 1 Lush. 90; The Sabine, 101 U. S. 390, 25 L. Ed. 982. In the one case the reward should be more liberal than in the other. Here the services of the libelant were rendered at the request of the master of the ship, for which it was entitled to be paid, whether such services were beneficial or not; and, although the services were rendered with promptness and efficiency, there was not manifested any disposition on the part of the libelant to take any chance of earning reward, but, on the contrary, it appears that the libelant was unwilling to send the Falcon to aid the ship unless her master requested that it be done. Under such circumstances, while the libelant should be awarded a sum in excess of the actual value of the services rendered and the actual damage done to its property engaged in the service, and while such excess should be liberal, it should not, in my judgment, be measured by that high standard that would control the award had the services been rendered voluntarily."

In the case from which the foregoing quotation has been taken there was not only promptness, but no lack of good faith, nor any mercenary spirit shown on the part of the salvor, such as is claimed to have been shown on the part of the libelant in the present case. That the law is as indicated in the decisions above cited was also decided by this court in the case of The Elmbank, 69 Fed. 104, 108, 109, 16 C. C. A. 164. See, also, The Queen of the Pacific (D. C.) 21 Fed. 460, 471; The Sandringham (D. C.) 10 Fed. 556, 570; The John Gilpin, 13 Fed. Cas. 675, 678; 24 Encyc. of Law, 1206; The Kate B. Jones [1892] P. D. 336, 7 Asp. Mar. Cases, 332; The Beularig, 14 P. D. 3; The Endermore, 7 Asp. Mar. Cases, 334; The Mark Lane, 15 P. D. 135, 137; The Lustre, 3 Haggard, Adm. 154.

As a matter of course, the libelant was entitled to fair compensation for the services of the Restorer, which the court below fixed at $1,000 a day, with which award, in view of the record, we are not disposed to interfere. Nor can we say that the $5,219.53 awarded the libelant for consumption and loss of stores, and expenses on account of the salvage operations was too much. Whether the libelant is justly entitled to a bonus in addition to those allowances, and, if so, in what amount, depends upon the facts and circumstances hereinafter referred to. Even if the Restorer was entitled to any bonus, we think the trial court attributed to her efforts too much effectiveness, as well as exaggerated the risk to her. In respect to the risk to the Restorer, we think the evidence shows it to have been very slight. Both sea and weather were moderate, and we are unable to see where there was any danger to a well-appointed, powerful steamer, such as the Restorer was, in doing what she did, unless it be in the maneuver of September 14th, directed by Capt. Metcalfe and his assistant, Capt. Pillsbury. In respect to that maneuver the log of the Restorer is as follows:

"2:00 p. m. Weighed anchor and set on for fresh position as advised by Captain Pillsbury.
"3:00 p. m. Brought up with star, anchor in 7 fms. water, finding anchor dragging, with 30 fathoms chain out paid out hawser with end fast to 6x3 grapnel rope.
"3:10 p. m. Signaled for launch. Captain Pillsbury boarded ship.
"3:20 p. m. Ship still dragging and drifting on lee shore, paid out to 60 fathoms.
"3:55 p. m. Signaled for tug Eleu, passed end of 8" hawser aboard, hove up anchor, and proceeded to position, where Captain Pillsbury let go mark buoy."

As has already been said, the maneuver was directed by Capt. Metcalfe, after the Manchuria had been unexpectedly moved almost directly astern some 250 feet, where she had stuck fast. The then towing vessels were the government vessels Iroquois and Manning and the Restorer. The movement directed was executed by the government vessels without difficulty; but the Restorer, although given the aid of the tug Eleu, got beyond the position to which she was assigned, and, her anchor dragging, she began to drift towards the shore. Capt. Metcalfe then sent Capt. Pillsbury to the Restorer to see what the trouble was, and on Capt. Pillsbury's arrival on board he suggested to Capt. Combe to stop his port engine, pay out more chain, and slack up on the

towline, which was done, and the threatened peril thus avoided. The sole fault seems to have been that of Capt. Combe.

Capt. Carter, of the government vessel Iroquois, was questioned, and answered as follows:

"Q. Do you remember the maneuver made by the Restorer and referred to herein as having been made on the 14th of September? A. I do. Q. Was it or was it not one similar to the one made by your ship? A. The object of it was; yes. Q. I am not asking the object. Was it a similar maneuver? A. No. Q. In what did it differ? A. She went in closer to tow her than I did. Q. I understand that your boat was third in order of placement before the maneuver was made? A. Yes. Q. First the Manning, then the Restorer, then the Iroquois—is that correct? A. Yes. Q. Can you state whether the maneuver was intended to keep those three boats in their relative positions? A. That was my understanding of it; yes. Q. Was the Restorer, prior to making the maneuver, anchored? A. She was anchored or moored. Q. Forward? A. Yes. Q. With the line running from the stern? A. Yes. Q. In making this maneuver referred to on the 14th, did she lift her anchors? A. She did. Q. In making the maneuver on the part of the Iroquois, what was necessary and proper to be done in order to do it? A. Pick up the anchor, go ahead with the starboard helm, get the right position, and let go the anchor again. Q. What would assist the Iroquois following that procedure to take the position required? A. The wind was favorable to do it. Q. Sea favorable? A. Wind and sea both favorable. Q. What direction did the wind and sea incline to take the Iroquois after the anchors had been lifted with reference to inshore or outshore? A. Take her inshore. Q. What was the use— What was the method employed by the Iroquois to keep her line running to the Manchuria from fouling her propeller in making the maneuver? A. We kept men to keep it turning in the right direction, so that it would keep clear of the propeller. Q. What kept the line comparatively taut? A. Going forward on the engines. Q. The forward movement of the engines? A. Yes. Q. Can you state anything other than sea, wind, and the use of your engines and helm that would be proper and necessary to accomplish that maneuver? A. I accomplished it without anything else. I did not think anything else was necessary. Q. Did you accomplish it properly? A. No. Q. Why not? A. I was interfered with by the Restorer. Q. Will you please explain now why it was and how the Restorer interfered with your accomplishing the maneuver properly in the first place? A. She got across my bow, and I was afraid that her line would foul my propeller or anchor. Q. What did you do when you found this condition of affairs? A. In order to keep from going too far in, I let go the anchor. Q. Did the Restorer actually cross your bow? A. She did. Q. Taking this third place, rather than the second, as I understood, in the position? A. Yes. Q. Do you know whether, at the time of crossing your bow, she dropped her anchors? A. I did not see her drop any anchor. Q. Did you observe the Restorer's maneuver? A. I did. Q. While it was being made? A. I was on the bridge when it was being made—the bridge of the Iroquois. Q. And observed it? A. Watched it all the time. Q. After you had dropped your anchor for the reason which you have stated, did you subsequently make a new maneuver? A. I did. Q. In what direction was that, inshore or outshore? A. Outshore. Q. Did the Restorer make a subsequent new maneuver? A. She did. Q. What do you know about that maneuver? A. After Capt. Pillsbury had left me, when he asked me to take up the new position, he went to the Restorer. The Restorer then got under way, shifting her berth to the northward and westward, but the exact bearing I do not know, because I was not on board of her. She got across my bow, and I was obliged to anchor to keep from going still further in. Then Capt. Pillsbury came out. Q. From where? A. Out towards me, either from the Manchuria or the Manning, and he passed me, and I asked him what the Restorer was trying to do, and he said he did not know, or something to that effect. He went to the Restorer, and the Restorer then took up a position practically in line with the position I wanted to take, and the one I suggested to Capt. Pillsbury, originally. Q. With the Restorer in the position that she was in, after crossing your bow in the first maneuver, what was necessary to put her in the position that she took in the second maneuver

which you have just testified to? A. Would have to go ahead on her engines with helm aport. Q. What engines? A. Both engines, if she had sufficient for turning. If not, she could go ahead on one engine and back on the other. She certainly could turn that way; go ahead with the port engine and turn with the starboard. Q. Did you see she made any difficulty in making the second maneuver? A. No. Q. Did you make any difficulty in making the second maneuver? A. None to speak of. I got a little further on her starboard quarter than I liked, and then shifted a little more to port. Q. Which was the more difficult maneuver made by you, the first or second? A. The second. Q. Which was the more difficult maneuver made by the Restorer, the first or second? A. I should say the second. Q. In making the first maneuver, would you find any advantage in having twin screws? A. A decided advantage. Q. Do you know of any reason why the Restorer did not properly make the first maneuver? A. No; I do not. Q. Was there any peril to the Restorer during the first maneuver? A. I do not know how close in she got. I do not know whether she took any soundings. Q. If there had been peril presumed or anticipated, was there any means of avoiding any in your judgment? A. She could have gone ahead on her port engines and backed on her starboard; but, if she could not do that, she could have anchored. Q. Either of the courses, in your opinion, would have kept her from the reef? A. Yes. Q. Do you know whether the Manning had any trouble in making the maneuver? A. Did not see any at all. Q. In your judgment, was the attempted maneuver, which we have designated the first maneuver, of the Restorer a proper one, or properly executed? A. It depends upon what they were trying to do. I don't know what they were trying to do. Q. If they were trying to go ashore, it was proper? A. It might have been successful. Q. Was it a proper maneuver to reach the position designated for the Restorer? A. I do not know what position was designated. Q. You do not know whether or not the position inshore and across your beam was her designated position or not? A. No; I do not. Q. Did you take your proper position in the first maneuver? A. No. Q. Was your present position inshore or outshore from where you did drop anchor? A. Outshore. Q. And the reason you took it was because of the line coming over your bow? A. Yes. Q. In order to execute your first maneuver with the assistance of the wind, the sea, your engines, and helm, was it made perilous because of your line running to the Manchuria? A. No; I was never in any peril. Q. If your maneuver was properly executed, would that line have been an element of danger? A. Not of danger. Q. If properly executed? A. Not of danger. It would have been an incumbrance in turning; that is all. Q. Was the Restorer's line an element of danger in the proper execution of her maneuver? A. I should not think so. Q. During your observation of the wrecking operations while at Waimanalo Bay, did you see at any time that the Restorer was in peril? A. As I said before, I do not know what soundings she got when she was inshore of me. She may have been; but I do not think so. Q. Prior to that? A. No. Q. Subsequent to that? A. No. Q. Did the Restorer have to depend entirely upon her engines to keep her from the reef in making that first maneuver? A. No; I should think she could have anchored without any difficulty. Q. Do you know of any reason why she could not have used her engines? A. Do not know any reason. Q. Will you state whether, in your opinion, she dropped her anchors at the proper time in making her first maneuver? A. She did not; that is to say, if the position that she subsequently occupied was the one intended for her."

The evidence showing, as it does, that the steamers Manning and Maui and the tug Fearless, with 3,647 combined horse power, together with the Manchuria's own engines and two of her anchors, were unable to pull that ship from the reef or to keep her from going further on, and that before the Restorer got any line to the Manchuria the ship was firmly embedded, it does not seem likely that the Restorer was capable of doing very much in the way of steadying the Manchuria, although no doubt she aided to some extent in that direction. The finding of the trial court, however, to the effect that the Restorer was

the chief agent in pulling the Manchuria's stern out 9½ degrees between August 25th and August 29th, we think clearly unjustified by the record. The court in its opinion said:

"The Manchuria's log reports that from 1 p. m. of August 21st to 12 midnight of August 24th, she headed S. S. E., and that thereafter her stern swung out from time to time until 1 a. m. August 29th, when she headed S. 13° E. On this day Metcalfe arrived and took charge of the salvage operations, and directed the Restorer to stop towing at 4:54 p. m. In this space of five days the direction the Manchuria was heading changed 9½ degrees toward the south and west, which was toward the shore, by which her position was changed to a marked degree for the better, inasmuch as her stern was swung out correspondingly toward the open sea, bringing her less broadside on to the reef than before. The broadside position is testified to by Metcalfe as being more dangerous and difficult than a head-on position. Here is a record showing a favorable change of the position of the Manchuria, which would naturally be produced by a pull on the stern from a position at or about right angle to the line of the hull. Such a force was exerted during those five days by the Restorer, and by the Manning after 2 p. m. of August 26th, and by cables of the Manchuria attached to anchors. On the first day of this period, August 25th, in the afternoon, a 7-ton anchor was laid with hawser to the starboard stern. On the third day another 7-ton anchor was laid with hawser to the starboard stern, and all this period there were two 2½-ton anchors with hawsers to port stern and two from port bow. Some credit must be given to these stern hawsers, if they were hove taut from time to time as the Manchuria swung around. The log notes only one such action; but Capt. Saunders in his deposition, on pages 8 and 9, testified that 'we hove our big anchors taut to keep the vessel as near steady as possible.' This clearly refers to the 7-ton anchors mentioned above. It is in evidence that at 10:45 p. m. August 24th the Restorer was directed to increase the speed of her engines, and this was continued; also that on the next day the Restorer was making a greater speed with her engines than usual. This increased strain was kept up during these five days; her log showing from 30 to 45 revolutions of her propeller. This evidence closely covers the time, as shown by the Manchuria's log, when she began to change her position for the better, about midnight of August 24th, which movement continued until the morning of August 29th, making a change in her direction for the better of 9½ degrees as shown above. From August 29th to and including September 2d, a period of four days, she swung around 2 degrees more, supposedly by the force of the steam winches alone, and the Restorer towing at only 20 revolutions. Then from September 2d to September 13th there was no further movement. The fact that in the five days from August 24th to August 29th the Manchuria swung, with the assistance of the Restorer, 9½ degrees, about 2 degrees a day, and in the next four days, without such assistance, she swung only 2 degrees, or one-half degree a day, is certainly favorable to the theory of the effectiveness of the Restorer in swinging the stern of the Manchuria to the sea. Although it is impossible under such circumstances to make an accurate estimate of the proportionate value of such efforts, it is the rule of admiralty courts to weigh such evidence liberally for the salvor."

The log of the Restorer shows that at 5:20 p. m. of August 24th the Manchuria signaled her to "reduce speed to 20 revs.," and that accordingly the Restorer's engines were then set at 20 revolutions. The next entry in her log, made at 8 p. m. of the same day, is as follows:

"Moderate E. N. E. breeze and sea. Sdgs aft 6½ fms. The C/S Restorer only to assistance, with two lines but slack. S/S Manchuria being held off reef by her port bower anchor with 15 fms. chain out. Two anchors led out from her port quarter attached to the 6x3 grapnel rope (part of originally given to U. S. S. Manning), and her 7-ton anchor attached to her steel wire hawser led out from her port quarter from her starboard side."

And at midnight of August 24th this entry was made:

"Moderate breeze and overcast, with increasing sea. Engines at 20 revs., as ordered, with slack hawsers."

Yet it appears from the log of the Manchuria that during that time the Manchuria's head changed 1½ degrees, which, as a matter of course, could not have been caused by the slack lines of the Restorer; it appearing by the testimony of her own captain that 20 revolutions of her engine were necessary to prevent her lines from chafing. It further appears from the log of the Restorer that at 7:33 a. m. of August 25th the Restorer obtained permission from the Manchuria "to put weight on hawsers" and to set her engines at 35 revolutions, and that two minutes thereafter the engines of the Restorer were accordingly set at 35 revolutions and so remained, according to the log, at 35 revolutions until 7:22 p. m. of August 26th, when the revolutions were reduced to 30. At 10:57 a. m. of August 27th her engines were stopped, at 11:18 a. m. of the same day they were set going at 30 revolutions, at 4:10 p. m. of August 28th they were increased to 35 revolutions, at 5:02 p. m. of the same day (August 28th) they were reduced to 30 revolutions, and at 1:45 p. m. of August 29th they were, according to the log, increased to 45 revolutions. During these various changes on the part of the Restorer, the Manchuria's head, according to her log, shows three changes, besides the change of 1½ degrees already referred to, to wit, at 1 p. m. of August 26th there was a change of 1 degree in her head, and between midnight of August 26th and 1 a. m. of August 27th a change of 5 degrees, and at 1 a. m. of August 29th her head changed 2 degrees. It thus appears that the greatest change in the Manchuria's head, to wit, 5 degrees, occurred at a time when the Restorer's engines had been running at 30 revolutions for between 5 and 6 hours, and that there was no change during the 29 hours that her engines remained at 35 revolutions, and, further, that the change of 2 degrees in the head of the Manchuria which occurred between midnight of August 30th and 1 a. m. of August 31st occurred at a time when the Restorer's engines were making but 20 revolutions —just enough, according to her captain's own testimony, to keep her lines from chafing. These facts, shown by the logs of the Manchuria and Restorer, respectively, would seem to indicate quite conclusively that the Restorer was certainly not the chief cause in the changes in the head of the Manchuria, aggregating 9½ degrees, although she probably was instrumental to some extent in those changes.

But, assuming that the conclusion of the court below to the effect that the swinging of the Manchuria was chiefly due to the action of the Restorer was correct, and conceding that the latter also rendered valuable services in the steadying and pulling of the Manchuria, still is the Restorer entitled to any bonus in view of the facts and circumstances of the case? As said by the proctors for the claimant, a vessel could hardly have been more favorably situated to render a genuine salvage service than was the Restorer, for "she was fully equipped and manned, yet disengaged, and neither seeking nor desiring the employment that, commercially, would have been advantageous to other ships." Yet there was not even a tardy offer on her part to go

to the assistance of the distressed ship, pounding heavily on the reef. Upon written request for her services only did she, in the afternoon of the second day, consent to render any assistance. The libelant's representatives at Honolulu would not even consent to get up steam, in order to be ready to start upon hearing from its head office in New York, without a guaranty on the part of the claimant for reimbursement for such expense. Such precaution and exaction may be commendable in securing the actual and true value of services rendered; but they come with no grace at all before a court of admiralty in behalf of a demand for a bonus. But this is not all. The libelant's head office in New York having, on the 21st day of August, 1906, granted the request for the Restorer's assistance to the Manchuria, that office on the same day cabled its Honolulu representatives to—

"keep a careful record of what you do in way of salving Manchuria, also particulars of her position, state of weather, sea, and tides, risks and perils of Restorer, description of other vessels engaged in work, and anything of value in determining salvage."

On the 24th of August Gaines, the libelant's superintendent at Honolulu, cabled its New York office, among other things, as follows:

"Manchuria is now so anchored as to keep her from pounding. * * * Restorer is only vessel with her to-day; has five lines out, and is keeping her from drifting further on reef. * * * Wrecking appliances will reach here from San Francisco Tuesday. Present plan is keep her loaded, so cannot move and pound on reef, until proper appliances arrive, when effort be made move her. * * *"

The next day, August 25th, Mr. Gaines cabled the libelant at New York the following report of Capt. Combe of the Restorer, of date August 23d:

"Now anchored with four hawsers to Manchuria. Am requested not to tow for present, but hold hawsers. They have filled all ballast tanks to keep ship in present position till more anchors run out and Lloyd's surveyor arrives from San Francisco with heavy gear before discharging cargo. She has ground bed into soft coral reef and sand on even keel. Weather fine; moderate sea. Only Restorer to assistance with hawsers."

On the same day, to wit, August 25th, the New York office of the libelant cabled its representative at Honolulu, among other things, as follows:

"Is there slightest chance of Restorer pulling Manchuria off before wrecking gear arrives? Do you think Manchuria purposely delaying to save salvage? If you think you can get her off without waiting for surveyor's arrival, can you not insist that you be allowed do so?"

In the Restorer's log we find this entry made at 7:50 p. m. of August 25th:

"Captain Combe boarded the S. S. Manchuria and again requested the captain to do something in the way of trying to pump out the ballast tanks or get schooners down to discharge cargo into, so as to give us a chance to get her off, but received the same reply as before when boarding her at 7:35 a. m. on the 23d; that being that they were unable to pump out their ballast tanks owing to the connections being broken, and that they could not lighten her till Lloyd's surveyor arrived wih more wrecking gear, their orders being to hold the ship in her present position and keep her from drifting further inshore. I advised them again I was perfectly confident I could hold them off, and, what was more, could pull them off if they lightened the ship and gave me a chance,

and also advised them they could not expect the C. S. Restorer to remain here for an indefinite time, because if anything happened to our cables we should be called off at once. Whilst aboard it was noticed she had a list to port, probably due to shifting of the cargo, which was then being carried on. The S. S. Manchuria was then heading S. 13 degrees E."

On August 27th Mr. Gaines cabled the libelant's office in New York this further report of Capt. Combe:

"Am perfectly confident could pull Manchuria off, if assisted by them discharging cargo, coal, water, ballast, which they will not do, saying cannot pump out water, connections broken. Firmly believe connections could be made aboard, or, if required, pumps obtained locally. Also saying they have been ordered not to discharge cargo till surveyor arrives; reason being to hold ship from drifting further inshore. This seems absurd, because Restorer can hold her off. They are now shifting cargo aft. Everything points to them not wanting us pull them off."

Not only do these communications and proceedings disclose upon the part of the libelant a very keen desire to obtain a large salvage award, but a distinct threat upon the part of the master of the Restorer, under direct suggestion from the libelant, to withdraw his vessel unless he was given a chance to get the Manchuria off before other aid could arrive, in disregard of the orders of the Manchuria's owners, of which the Restorer's master was aware, and which "chance" involved the lightening of the Manchuria, with the inevitable result of further embarrassing her should the Restorer fail; and this, too, when according to Capt. Combe's own testimony he had had no experience whatever in the matter of salving distressed vessels, and at a time when there was no immediate emergency so far as the Manchuria was concerned, since she had not only made a bed for herself, in which she was constantly becoming more secure, and at a time when there was not only no bad weather prevailing, but none to be anticipated, and when capable expert assistance was known to be on the way, soon to arrive. Upon these points we extract from Capt. Combe's testimony:

"Q. Had you, when you made this suggestion to Capt. Saunders (the master of the Manchuria), considered what it meant to have lightened a ship of that size, discharging her of her water, her coal, and her cargo? A. I knew what it meant, and I was prepared to do my best if they gave me a chance. Q. You were prepared to run the risk? A. If they allowed me. Q. What was the risk you were prepared to run? A. The risk of lightening the vessel. Q. What was that risk to the Manchuria in lightening? A. If I was unable to pull her off, she would have gone further up. Q. What risk in lightening the Manchuria do you refer to? A. That is the risk, sir. Q. What risk? The Court: He stated it. If he couldn't pull her off, she would have gone further up. Mr. McClanahan: That is the risk you were willing to run with the Manchuria—she would go further on if you were unable to handle her with your boat? A. Yes. Q. You seriously and purposely suggested that risk to Capt. Saunders? A. I did. Q. And you have never had anything to do with salvage? A. No; I took a good opinion from the pilot. He is a man of considerable experience. Q. Why, Captain, were you willing to have the Manchuria run that risk? A. I was anxious to get her off, sir. Q. Why? A. Why, for the good of everybody. Q. Did you not know at that time that a salvage expert was then on his way to Honolulu with wrecking paraphernalia? A. I do not know just what day I first heard that; but I knew it. Q. You knew that? A. I don't know whether on that date or not; but I think I did. I am almost sure I did. Q. Then why this unnecessary haste to make this new offer of services to have the ship lightened? Did you want to get her off before the salvor could get her? A. Yes. I knew Capt. Metcalfe, certainly; but I wanted to do what I

could for the ship. Q. Did you want to try before the salvor could get her? A. Yes. Q. To get her off before Metcalfe arrived? A. Yes, sir. There was no spite idea, it was just to do my best. There was no ill feeling anywhere at all. Capt. Saunders was as anxious as I was. Q. You knew at that time Capt. Saunders' orders from his owners? A. Capt. Saunders told me then that he had to keep the ship there until Metcalfe arrived with the paraphernalia."

The record shows that, as a matter of fact, it was little, if any, short of absurd to talk, on August 23d, about the Restorer pulling the Manchuria from the reef. When Capt. Metcalfe arrived, that expert said that five ships the size of the Restorer could not have done so. In further pursuance of the manifestly studious plan to make a case for a large salvage award to the Restorer, was the cable from the libelant's New York office of date August 29th, in which the libelant's representative at Honolulu was instructed, among other things, as follows:

"Have our attorneys in Honolulu advise you day by day as to proper course to preserve all our salvage rights. Is there any specialist on salvage law in Honolulu? Our object should be to use the fact that, but for Restorer, the Manchuria would have been total loss. Acknowledgment and report August 29th."

The record shows that these instructions were acted upon, and that an attorney was secured in Honolulu; his presence on the Restorer being noted in its log at 6:45 p. m. of the same day, August 29th, which, it will be remembered, was the day of Capt. Metcalfe's arrival from San Francisco with the wrecking outfit, and the day on which he ordered the Restorer's engines stopped. Two days afterwards, to wit, August 31st, Gaines cabled from Honolulu to the libelant in New York, as follows:

"Attorney returned this evening from Restorer. Reports valuable services already rendered, and good salvage claims if ship floated. Before ship left I suggested to Combe he better obtain written request. He has letter from Hackfelds, who are agents, requesting him (Combe) to her aid as soon as possible, but nothing said about compensation, so salvage claim unimpaired. Metcalfe, the expert, questioned to-day as to arrangements for compensation; but Combe instructed to refer all compensation questions to home office. Metcalfe will say to-morrow what further service required; but attorney advises Restorer stand by anyway till Manchuria floated. Probable this will interfere with proposed Midway trip, in which case thinks you better forward Combe instructions. There is temporary telephone connection with shore near the wreck, but is controlled by agents, who have a man always within hearing. Only other means communication is by land, which costs $25, whether merely messenger goes or passengers taken. I will go over again if anything important."

At this time, to wit, August 31st, Mr. Ward, vice president of the libelant, was at Guam, and the Restorer had been expected to meet him at a place called Midway. On August 31st, the libelant cabled from New York to Mr. Ward as follows:

"Lloyd's surveyor arrived Manchuria. Ordered Restorer stop engines. Intends put down anchors, then lighten ship, and pull her off by strain on winches. Combe reports, if is to go to Midway, must leave Manchuria not later than September 4th. We believe Lloyd's do not want Restorer to pull Manchuria off. Combe thinks could pull her off if she was lightened. Salvage attorney advises Restorer stand by until Manchuria floated. How does this affect your orders to have Restorer meet you off Midway?"

The next day, to wit, September 1st, Mr. Ward cabled from Guam, among other things, as follows:

"Inform Combe he must not leave Manchuria so long as he can be of least assistance, even if he is unable to meet me at Midway. Nothing must be done that would invalidate our claims for any salvage. Take advice of our attorneys."

The New York office of the libelant having been informed that the Restorer's compensation would be adjusted in New York, that office cabled its representative at Honolulu on September 6th, among other things, as follows:

"As underwriters propose settle salvage New York, it will be necessary all evidence and data be forwarded to enable us determine amount salvage. Please, therefore, send any data you have; also ask Combe send copy all records he was requested keep. Papers should, if possible, show whether or not Manchuria would been lost had not Restorer arrived so quickly. Also approximate value Manchuria and cargo separately."

It thus appears that Capt. Combe was specially requested to keep certain records in regard to the matter. And we find in the log of the Restorer certain entries which were manifestly made with a view of furthering the claim of that ship to a salvage award. For example, at 0:45 p. m. of the first day of her service, to wit, August 22d, is this entry:

"Signals received from S/S Manchuria to keep hawsers taut. Set engines at 20 revolutions. U. S. S. Manning still laying at anchor with both 8" manila and 6x3 grapnel rope slack and engine stopped. By keeping our hawsers taut it saves the S/S Manchuria from being set further inshore by the wind and sea, which are on her broadside driving her on a lee shore."

And, after the night of August 22d, during the whole of which, with the exception of 2 hours and 10 minutes, when her engines were set at 20 revolutions (just enough, according to her master's testimony, to keep her lines from chafing), they were at 15 revolutions, there is this entry in the Restorer's log, made at 8:54 a. m. of August 23d:

"The captain of the S/S Manchuria reported ship resting quietly all night, probably due to strain put on Restorer's hawsers."

The facts shown by the record did not justify the cable of September 6th, above set out, in which the New York office stated in effect that the underwriters had proposed to settle "salvage" in New York. The record shows this in respect to that matter: On Metcalfe's arrival on the afternoon of August 29th, he dispensed with the services of the Restorer. That fact was thus reported by Gaines from Honolulu the next day, August 30th, to the New York office:

"Visited scene of wreck with Ballou, senior member our attorneys. Went on board Restorer. Ballou thought he better stop on board until to-morrow in case any question should arise. All rights to salvage preserved. Manchuria has been waiting arrival of Metcalfe, salving expert from San Fran. Metcalfe arrived 4 p. m. Ordered Restorer stop engines. Proposes to sink Manchuria to hold her until heavy anchors in position, then lighten and put strain on winches. Do not know what use he will require of Restorer, but she will stand by and render all assistance."

In Gaines' cable of the next day, August 31st, which has already been set out, it will be seen that he therein stated that:

"Metcalfe, the expert, questioned to-day as to arrangements for compensation; but Combe instructed to refer all compensation questions to home office. Metcalfe will say to-morrow what further service required; but attorney advises Restorer stand by anyway till Manchuria floated."

So that compensation, not salvage, was the matter spoken of between the parties to be referred for settlement in New York; and that fact is further shown by Metcalfe's cable of August 30th to the claimant's agent in San Francisco, in which he asked "What arrangement has been made services Restorer?" and by the San Francisco agent's telegram to Harriman in New York, and Harriman's reply thereto of date August 31st, as follows:

"Telegram received. Have made no arrangements regarding charges of Commercial Cable boat Restorer. Go ahead and use her, and I will attend to matter of charges afterwards. The Cable Co. is under obligations to us."

And by the San Francisco agent's reply to Metcalfe of the same date, to wit, August 31st, reading as follows:

"Restorer charges will be adjusted New York. Use as necessary."

The record shows that in view of these telegrams Metcalfe retained the Restorer, which fact was communicated to the libelant's New York office by its Honolulu representative, Mr. Gaines, on the 3d day of September, in these words:

"Have had an interview with Metcalfe, who had received cable his company saying compensation Restorer would be adjusted New York. Metcalfe said this was satisfactory, and Restorer would be kept by Manchuria."

In view of these facts it cannot be doubted that Metcalfe's understanding was that the compensation for the employed services of the Restorer would be adjusted by the respective parties in New York, and such is his testimony, from which we extract as follows:

"Q. Did you, Captain, know of the relation existing between the Cable people and Mr. Harriman? A. Before leaving San Francisco, it was conveyed to me in some way which I don't remember. It was conveyed to me that the business interests of both Harriman and the Pacific Cable Co. were pretty close. In what way I got the idea I can't tell you; but it was with me all the time I was down here when we had the Restorer in operation until we got back from Midway, and then I was very disagreeably disabused of the idea. Q. When you got this cablegram of the 31st of August (reading): 'Metcalfe: Restorer charges will be adjusted New York. Use as necessary'—and so forth, what did you understand that to mean? A. I understood by that that the parties interested, Mr. Harriman and the Cable Company, Mr. Harriman being president of the Pacific Mail Steamship Company, and I didn't know whether Mackay was the president of the Commercial Pacific Cable Company or not. I thought they had got their heads together and fixed on a figure to be paid, per diem or otherwise, as the case might be. Q. What did you know Mr. Harriman's connection to be with the Pacific Mail Steamship Company at that time? A. He was president of the company. Q. Did you know that? A. Oh, yes. Q. Why did you send a cablegram asking about the compensation to be paid the Restorer? A. Because it was my duty, as soon as I found out that no rate had been fixed for her employment, it was my duty, as representative of the parties interested, the owners and underwriters, to find out and establish the fact. Q. And the cablegram of the 31st of August in answer to yours of the 30th was satisfactory to you, was it? A. Perfectly, and I so expressed myself to several people; Capt. Pillsbury for one, because he was much interested with me, and several others, I haven't the least doubt—the agents, for instance. Q. Captain, in your capacity as representative of the underwriters, or as representative of the owners, did you ever propose to any one yourself

to settle a salvage claim for the Restorer in New York? A. No, sir. Q. Or any other kind of a claim? A. No, sir. Q. Or did you propose to any one down here in any capacity to settle the compensation for the services of the Restorer in New York? A. No; but if it had been intimated to me that they had been unable to come to any reasonable terms, I would have settled it very quickly. I had full authority. Q. Do you know Mr. Schwerin? A. Very well. Q. Do you know now the basis of this telegram from Mr. Schwerin of the 31st of August? A. Do you mean the telegram from Mr. Harriman to Mr. Schwerin? Q. Yes. A. I have heard it read in this court. Q. You think that telegram warranted Mr. Schwerin in sending his to you? A. Well, Schwerin is a pretty smart fellow. If Mr. Schwerin had sent me that same telegram, I would have known exactly what to do. Q. What would you have done? A. I would have approached the owners of the Restorer either here, probably through this office here, and requested them to name a price per day for that vessel, including the time she had already been out there, either on the basis of such much per day and pay their expenses or combining the two. If the rate had been satisfactory, I would have said, 'All right, I will give you an agreement to that effect,' and that would have been binding. If they had asked me a different figure, that I thought outside of all reason, I would have said, 'I will give you so much per day and pay your expenses,' and if they declined I would have said, 'All right, gentlemen, pick up your anchor and go back to town.' Q. That is, if you had received the cablegram that Mr. Schwerin did? A. Yes. Q. Captain, during the salvage operations, and after the receipt of the cablegram of August 31st, did you in any manner restrict or intend to restrict the services of the Restorer? A. Not in the very least. Q. Did you limit or intend to minimize the services to be performed by the Restorer? A. Never had the slightest idea of such a thing. Q. In reference to the positions given to the three ships, what position did you give to the Restorer? A. Well, I should say the Restorer had about the best position of the three. Q. Why didn't you make arrangements to have the Manning tow the Manchuria to Honolulu? A. Well, she is a government ship to begin with. My impression was all along, from the time I received that cable, that the Restorer was under pay and at my service absolutely, and when I am paying for anything I make the best use of it. Q. You knew that the government's ship services were free, did you? A. Quite free; yes, sir. Q. Is that the reason you gave the tow to the Restorer? A. I gave it to her because I thought she was in my employ, and another thing she is the more powerful ship of the three. Q. In your opinion, could the Manning have performed the tow? A. Oh, yes; not quite as quickly as the Restorer, but it could have towed the Manchuria in the weather that prevailed at that time. Q. Could the Iroquois have done it? A. Yes; in my opinion, she could. We handle those ships with a great deal smaller tugs than the Iroquois."

The libelant's New York office was informed by the cable from its Honolulu agent of August 31st that:

"Metcalfe, the expert, questioned to-day as to arrangements for compensation; but Combe instructed to refer all compensation questions to home office. Metcalfe will say to-morrow what further service required."

And when, according to Metcalfe's understanding, it had been finally agreed between the parties in interest that compensation for the Restorer's services should be adjusted by them in New York, and he had continued her employment, which certainly excluded any idea of salvage remuneration for her future services, the libelant's New York office was notified by its Honolulu agent's cable of September 3d that:

"Metcalfe said this was satisfactory, and that Restorer would be kept by Manchuria."

If, notwithstanding all this, the libelant intended to claim a reward based on salvage principles, surely good faith required it to apprise Metcalfe of that fact. There was not only this bad faith on the part

of the libelant, but its action throughout was not only calculating and mercenary in the extreme, but was entirely lacking in those elements which often induce courts of admiralty to make awards at times greatly exceeding the expenses, losses, and actual value of the salvor's services. A salvor, said the court in the case of The Howard, 12 Fed. Cas. 630, 633—

"who, regardless of personal considerations, gallantly rushes into dangers to preserve the lives and property of others, when exposed to the horrors of shipwreck, or he who promptly goes forward, and contributes his aid when he believes his services will be beneficial in preventing impending loss, without stopping to inquire what amount in dollars and cents his exertions will bring to his own pocket, will always receive that liberal reward for his services which it is the policy of the law to allow, and which courts feel pleasure in awarding to generous and manly conduct; while he who holds back and quietly looks on at approaching ruin until his own services become indispensable to the preservation of the property he sees exposed, with the expectation that his reward will thereby be increased in proportion to the increased dangers from which the property is ultimately rescued, will find that he is disappointed in the realization of his golden hopes, and that a display of avarice at such a time renders him an object of contumely and reproach."

In line with these remarks and our conclusions, are the cases already cited, and The Bello Corrunes, 6 Wheat. 153, 5 L. Ed. 229; The Boston, 3 Fed. Cas. 932; The Byron, 4 Fed. Cas. 956; The D. M. Hall, 7 Fed. Cas. 770; Hand v. The Elvira, 11 Fed. Cas. 413; The Mount Washington, 17 Fed. Cas. 925; Spreckels v. The State of California (D. C.) 45 Fed. 649; The Clandeboye, 70 Fed. 631, 17 C. C. A. 300; The Ragnarok (D. C.) 158 Fed. 694.

The cause is remanded to the court below, with directions to strike from the judgment the bonus allowances, aggregating $30,000, and the interest allowed thereon by said judgment and, as so modified, the judgment will stand affirmed; Pacific Mail Steamship Company to recover its costs on this appeal.

(173 Fed. 46.)

BULL et al. v. UNITED STATES SHIPPING CO. et al.

(Circuit Court of Appeals, Second Circuit. July 23, 1909.)

No. 286.

SHIPPING (§ 175*)—DEMURRAGE—LIABILITY OF CHARTERER.

The steamship Eva was chartered to carry a cargo of coal to be loaded at Philadelphia; the charter party providing for "customary steamer dispatch loading, steamer to take turn with other steamers loading coal." By the rules of the Greenwich coal pier, where she was to load, each vessel was required to register when ready to load, and was loaded in turn, unless she failed to dock when her bearth was ready, in which case she lost her place and must re-register. The Eva registered, and her master was told by the charterer's agent that she could not be loaded for about a week. She then went to a shipyard to have some changes made in her bulkheads, which, however, were not necessary for her coal cargo, and could be suspended at any time on notice, and she could have reached the coal dock within an hour. When her turn for loading was reached, she was not notified; but another vessel was given her place apparently at the instance of the charterer, and she was delayed for several days. *Held*

that, after registering, she was not required to remain anchored near the docks, but was within her rights in utilizing the time while waiting for repairs, and was entitled to reasonable notice when her turn to load came, and that the charterer was liable for demurrage for the time she was delayed.

[Ed. Note.—For other cases, see Shipping, Cent. Dig. §§ 572–574; Dec. Dig. § 175.*

Demurrage, see notes to Harrison v. Smith, 14 C. C. A. 657; Randall v. Sprague, 21 C. C. A. 337; Hagerman v. Norton, 46 C. C. A. 4.]

Appeal from the District Court of the United States for the Southern District of New York.

In Admiralty. Action by Archibald H. Bull and others, as owners of the steamship Eva, against the United States Shipping Company, the Berwind-White Coal Mining Company, and others, for demurrage. Decree for respondents, and libelants appeal. Reversed.

A decree of the District Court for the Southern District of New York dismissed the libel in an action of demurrage for the detention of the steamship Eva at Philadelphia beyond the time limit stipulated in the charter-party. The action was originally brought against the charterer, the United States Shipping Company, which on petition, under the fifty-ninth rule, brought in, as a party respondent, the Berwind-White Coal Mining Company, which latter company held a subcharter in terms substantially identical with the original.

MacFarland, Taylor & Costello and Willard U. Taylor, for appellants.

Wing, Putnam & Burlingham and Henry E. Matteson, for appellee United States Shipping Co.

Wilcox & Green and Herbert Green, for appellee Berwind-White Coal Mining Co.

Before LACOMBE, COXE, and NOYES, Circuit Judges.

COXE, Circuit Judge. Both charters contain the following:

"It is agreed that the lay days for loading and discharging shall be as follows, if not sooner dispatched commencing from the time that the captain reports his steamer ready to receive or discharge cargo, and custom house formalities are fulfilled: Customary steamer dispatch loading, steamer to take turn with other steamers loading coal, and the cargo to be taken from alongside by consignees at the port of discharge, free of expense and risk to the steamer, at the average rate of not less than three hundred (300) tons per running day (Sundays and holidays excepted), providing the steamer can deliver it at this rate. Also, that for each and every day's detention by default of said party of second part, or agent, ten cents U. S. gold per net register ton per day, day by day, shall be paid by said merchants, or agent, to said chartered owners or agents."

Pursuant to the written directions of the original charterer, dated October 29, 1907, the Eva proceeded to Philadelphia, arriving there November 1, 1907. Her master reported to the Berwind-White Coal Company as follows:

"I beg to notify you that the S. S. Eva is now in port and ready to receive her cargo and will come on her lay days forthwith.

"Respectfully yours, H. R. Swift, Master."

He also registered the Eva pursuant to the local port rules which had been adopted two months previously. On this day, November 1st, Chase, the general manager of the Berwind-White Company, who received the notice of the master of the Eva, informed him that they would not be ready to load the ship for a week—"say next Thursday." Roney, a witness for the libelants, testified that he was present at this conversation between the master of the Eva and Chase, and that the—

"captain asked Mr. Chase when the cargo would be ready for his vessel and that Chase replied, 'The middle of next week.' Captain, as I remember, said that was rather indefinite and during the conversation Mr. Chase said 'by Thursday' or 'not before Thursday.'"

In the Berwind-White letter of November 9th to Mr. Rossen it is stated that the master of the Eva was informed that "it would be four or five days before the Eva could take berth." That this assurance was given is also admitted, in its essential particulars, by Chase who testifies as follows:

"He (the master) asked me at that time when I thought he would be loaded. I told him I could not tell exactly, there were some vessels there loading at that time, but it looked to me as though it would be next week. He said to me 'well, do you know when?' I said I suppose about the middle of the week."

The testimony shows that in view of the limited capacity for loading coal at Philadelphia it is seldom that a vessel receives quick dispatch. The Eva arrived about noon of November 1st and no loading berth was available until 5 o'clock of the afternoon of the 7th when the steamship Queen Adelaide, which took the Eva's place, was sent to the berth. It is manifest, therefore, that the master of the Eva was justified in assuming that his vessel was to lie idle for at least five and a half days—it was in fact nearly a full week.

Pursuant to the local custom of the port the master of the Eva registered her at 1:30 p. m. November 1st in the registry kept at the Greenwich coal pier. The rules requiring this to be done are as follows:

"1. All vessels must be registered by the proper officer in charge, in a book kept at the pier office for that purpose. Under no circumstances is a vessel entitled to register until ready to cargo. A vessel not registered will not be given a berth. * * *

"4. If from any cause whatever a vessel which has registered fails to dock when berth for cargo is ready, such vessel when ready to cargo must again register as newly arrived and take its turn according to the latest registration."

On arriving at Philadelphia the Eva proceeded to the Cramp, or Kensington, shipyard, a distance variously estimated at from 2 to 4 miles from the Greenwich pier, and tied up at the dock where she was given free wharfage. She went to the Kensington yard to receive her stores and make some repairs. This yard was within the port of Philadelphia and from there the Eva could have reached the coal pier in from half an hour to an hour. The repairs which the owner of the Eva desired to make consisted in replacing about two-thirds of a wooden bulkhead with steel. This substitution in no way affected her utility or capacity as a coal carrier. The change was not structural in character and was designed to enable her to carry asphalt with greater facility. When she reached Philadelphia she was ready to load and could have gone at

once to her berth had one been available. The repairs on the bulkhead could have been suspended at any moment and she could have been at the Greenwich pier within four or five hours after receiving notice that the vessel then occupying the coaling berth was about ready to vacate. That she would have been ready on Thursday afternoon there can be no doubt. She was in fact ready. Although vessels awaiting their turn frequently lie off the Greenwich pier it is not necessary that they should do so and in this case Manager Chase expressly states that they would accept a vessel lying at the Kensington yard "if she was in all respects ready."

The respondents insist that because the Eva was utilizing the days she was compelled to be idle in having a bulkhead repaired, she was not "ready" and that they were justified in having her name stricken from the registry and the Adelaide put in her place with a consequent delay of 10 days. It is not necessary to decide whether the name of the Eva was actually removed from the list; that question is wholly negligible in view of the fact that through the combined action of the respondents and the pier master the Adelaide which was registered 3½ hours afterwards was given the Eva's place. The fact of preference being admitted the modus operandi by which the result was accomplished is unimportant. This preference can be justified only upon the theory that the Eva was not ready because, and solely because, she was having a bulkhead changed during her enforced idleness. That there would be a delay at Philadelphia was contemplated by both parties when the charters were made.

The simple question, then, is were the charterers justified in arbitrarily determining, without notice to, or consultation with, the ship owners, that the Eva was not ready because she was having repairs made during the time she was waiting for her turn? We are of the opinion that the question should be answered in the negative. We think the testimony is overwhelmingly to the effect that when the Eva reached Philadelphia she was ready to receive cargo and would have gone directly to her berth had one been empty. She did not then begin to load because the berths were all occupied and proceeded to Cramp's shipyard relying on the statement of the charterer's agent that she could not be loaded until about Thursday of the following week. We think that the repairs which were being made could at any time have been discontinued and the Eva berthed upon receiving reasonable notice. That she was "ready" even upon the respondents' interpretation of that term, before a berth was vacant is proved beyond controversy. She was, indeed, ready on November 6th and could have come down from Kensington in an hour.

The respondents seem to proceed upon the theory that the Eva's position was analogous to that of a ticket purchaser before a box-office, or an apprehensive depositor awaiting his turn to reach the teller's window in a suspected bank, who forfeits his place if he drops out of line. Such a contention leads to the conclusion that a vessel loading at the Greenwich pier must lie on the anchorage ground opposite with bunker coal on board and hatches swept out, and if she fails in these respects she is liable to be stricken from the list by an invisible hand guided by any hostile interest. We do not so understand the situation.

The registration of vessels was intended as a substitute for waiting in line. Once properly on the list it is no affair of the pier master, or the charterer, what the vessel does so long as she remains in port. The test of readiness is her ability to reach the loading berth in time. If she fails the loss is hers, and the gain that of the vessels below her on the list.

Rule 4, quoted above, contemplates exactly this penalty and no other. If the registered vessel fails to dock when the berth for cargo is ready then, and then only, must she re-register. The rule does not say that if she utilizes the time she is compelled to wait by cleaning, or painting, or making changes in her bulkheads she may be sent to the bottom of the list by the machinations of hostile interests. Any interpretation of the rule which gives to an individual the arbitrary power of determining by an ex parte examination the condition of readiness must inevitably lead to favoritism and fraud.

Of course, a vessel once registered, must for her own protection, keep watch of the conditions at the loading berth, but any miscalculation is at her own risk. If she fails to respond when summoned she loses her turn, but no one else has a right to assume in advance that she will lose her turn. Even in a case where the repairs are so extensive that the presumption is strong that the vessel will not be ready there is no occasion for judging the situation in advance. As we construe the rule it works automatically, when a berth is vacated the next vessel on the list is summoned, and if she does not appear the next is called, and so on. We have no doubt that the refusal to give the Eva her turn at the loading berth was an arbitrary act without justification in fact or law.

Who is responsible? The respondents argue that the pier master is alone to blame. He was not called as a witness. It is not easy to discover any personal motive on his part for discriminating against the Eva. Whatever action he took must have been at the instigation of some interested party. To hold the pier master solely in fault for the Eva's detention would leave her remediless and would probably do an injustice to that official. The testimony on this branch of the case is far from satisfactory, but, such as it is, it points directly to the subcharterer as the responsible party. The master of the Eva testified that the pier master told him that he received his instructions to strike the Eva's name off the registration list from the shipper. Chase, the general manager for the shipper, testified that he knew of the repairs at the shipyard on November 2d and talked with the pier master on that day regarding the matter, but did not notify the master of the Eva that there was any question as to his status at the loading berth until Wednesday the 6th when he informed him that the Eva was not ready to receive cargo and her name had been taken off the list.

We cannot believe that the pier master without persuasion from some controlling source would have assumed the responsibility for such a highhanded and illegal proceeding. It is at least a fair presumption that the pier master received his information of the Eva's repairs from the manager of the Berwind-White Company, and that it was through its influence that the Eva lost her turn. If the libelants had been informed on November 2d that there was any question regard-

ing the Eva's right to retain her place it is probable that she would have abandoned the repairs if the matter could not have been arranged. But with full knowledge of the facts it seems inconceivable that the pier master would have insisted upon maintaining so indefensible a position. The shipper was, in a sense, the vessel's agent, he entered and cleared her at Philadelphia; if he did not actually connive at the unlawful preference given the Adelaide he remained silent when knowledge of the situation by the master of the Eva would, in all probability, have enabled him to explain the circumstances in time.

Counsel for the Berwind-White Company contend that the Eva's name was not stricken from the list. They say:

"The pier master simply treated the ship as not registered when he found she was repairing at the shipyard."

If counsel be correct, and the testimony seems to sustain their contention, there was nothing on the registry to indicate how the pier official was treating the Eva. Her master was a stranger, entirely ignorant of the local usages, and yet it is contended that the rights of his owners are to be destroyed because of a conclusion which the pier master had reached in his own mind but had failed to impart to the master either orally or in writing or by removing the Eva's name from the list. In other words, if the pier master was under no obligation to notify the ship, either directly or indirectly, it follows that vessels destined for the Greenwich pier are wholly at the mercy of an irresponsible autocrat; their rights depending upon the unknown and unascertainable condition of his mind. It may be that the pier master thought he had given sufficient notice when he informed the Eva's representative at the port expecting, of course, that he would immediately notify the representatives of the ship.

The testimony of Capt. Swift, uncontradicted by the pier master, that the latter told him that he was instructed by the Berwind-White people to take the Eva's name from the registry, the failure of Manager Chase to notify the Eva of the pier master's proposed action and the absence of any testimony indicating that the action of the pier master was induced by others, lead us to the conclusion that the agents of the Berwind-White Company are responsible for the Eva's unlawful detention.

The decree is reversed with the costs of this court, and the cause is remanded to the District Court with instructions to enter a decree for the libelants and if necessary to order a reference to determine the amount due.

NOTE.—The following is the opinion of Adams, District Judge, in the court below:

ADAMS, District Judge. This action was brought by Archibald H. Bull and others against the United States Shipping Company to recover for damages suffered because of delay in loading the steamer Eva at Philadelphia in November, 1907. After some formal allegations it is stated that in the month of October, 1907, the Eva, being about to conclude a voyage, libelants' agents made and concluded with respondents a charter-party which was annexed and made a part of the libel, marked Exhibit A. That charter-party provided for the use of the vessel and for compensation and contained this clause: "It is agreed that the lay days for loading and discharging shall be as follows, if

not sooner dispatched: Commencing from the time that the Captain reports his steamer ready to receive or discharge cargo, and Custom House formalities are fulfilled; customary dispatch loading, steamer to take turn with other steamers loading coal, and the cargo to be taken from alongside by consignees at Port of Discharge * * * and every days' detention by default of the party of the second part, or agent, so much per registered ton per day."

The Shipping Company's answer to that is practically that a charter-party was made as alleged and that the respondents sub-chartered such steamer Eva to the Berwind-White Coal Mining Company, copy of which charter is also annexed.

I may say here that the charter to the Coal Company was practically a copy, as far as conditions were concerned, of the original charter.

When the vessel arrived here she started for Philadelphia and in going up the Delaware River she passed the dock where she was to be loaded, which I judge was known to the master of the vessel. In passing a point further up and convenient to the office of the Berwind-White Company the master left the vessel, while she went on to Cramp's Shipyard in order to carry out a contract which had been made for work to be done on her. There is considerable conflict here as to what work was to be done under the contract, the libelants contending it was simply putting in a bulkhead and had nothing to do with the vessel herself; while the other parties contend that although it was not a part of the structure of the vessel it should be regarded as repairs. I suppose, strictly speaking, it was not repairs. There was something done for the improvement of the vessel to be subsequently used if an opportunity should offer when such exigency should arise. But while this contract was in force and while the vessel was going to Cramp's Shipyard in Philadelphia the master left the vessel and went and reported her "Ready" and upon that report the vessel obtained a status at the pier, under certain laws that have been stated and according to certain regulations made by a director of the wharves, which has been marked in this case Berwind-White Company's Exhibit E. These rules and regulations if they did not state the law as passed by the Legislature were at any rate recognized by these people, and by others going to Philadelphia as entirely proper for the governing of a vessel in this situation. Rule 1 provides that all vessels must be registered by the proper officer in charge, in a book kept at the Pier Office for that purpose. This Pier Office is the office that was passed by the vessel when on her way to Cramp's Shipyard. It was on a Pier in the lower part of Philadelphia at Greenwich Point. She passed those piers and went to Cramp's which is stated to be, and I suppose correctly, at least four miles away, and while there she was under the substantial control for the time being of the Cramp's people who were adding this bulkhead to the vessel.

I do not think that the vessel could be considered ready to load at that time. The Captain of the vessel states that he had some sort of understanding before the vessel went to Philadelphia that she would not be required for cargo for some little time, and that he was acting on that understanding when he allowed his vessel to go to Cramp's Shipyard. But he himself went to report that the vessel was ready, when she was not actually ready within the provisions of the rule I have just read, which provides that under no circumstances is the vessel entitled to register until ready to take her cargo. The Captain did register when she was not ready to cargo. She had passed the place for cargo and had gone to Cramp's Shipyard for the purpose of having this bulkhead changed. There is a good deal of conflict of testimony, but I have no doubt that the vessel could have stopped that work in the course of two or three hours and proceeded to her loading place. Nevertheless, when the Captain made his report she was not ready. She was then going to a place where a certain number of men had to work on her—forty or fifty it turned out—whose tools were aboard the vessel and were being used in the work of the improvement in having this bulkhead put in her. It seems to me that by proceeding that way the master obtained a status that he was not entitled to. If he had stated to the people who had charge of that Pier that he was going to a Shipyard for the purpose of making alterations or improvements on the vessel and could complete them on a short notice, and if some arrangement had been made with the Pier by which he could receive such notice as the

situation demanded, that would be different. But he reported that she was "ready" and when the Pier people discovered that she was at Cramp's Shipyard, not ready, but proceeding to make these improvements, they evidently struck her name from the list. The fact that she was obliged to re-register, seems to have been in conformity with the rules and regulations, or law, whichever we are pleased to call it, which says that a vessel not registered, will not be given a berth; also, that vessels must take their turn in loading in the order of their arrival and registry at the Pier Office.

It appears that the Berwind-White Company had coal in cars in the vicinity of the loading pier all the time which could have been put aboard this vessel when she reached there. She had to have a berth and in order to get that berth she had to fulfil the conditions required by the rule. As I have said, she was not in such condition, and when they found that she was not they struck her name off the list, so that she could not get the coal and there was no opportunity for the Berwind-White Company to deliver the coal to her until she could get a berth. They had the coal there to deliver to her and it seems to me they performed their full obligation with respect to the vessel and that the reason she was not loaded was because, instead of going to the Pier herself or anchoring off the Pier or somewhere in the vicinity and keeping some watch over the proceedings there and herself in touch with the people at the Pier, she went off and went to a dock where she had free wharfage, where she was to take in stores to be sure, but also where the alterations were to be made. She did not go out of the water, but she was far away from the pier where she was to be loaded and not in touch with the people. She relied upon the Berwind-White people for information in respect to the Pier. They were agents of the vessel and of course it was their duty to communicate any thing they knew about the vessel, but they could not control that pier. It was a pier entirely under the control of the Pennsylvania Railroad and the Berwind-White people could do no more than seek to influence the authorities by permission with respect to berths.

It seems to me, therefore, that the master lost his opportunity by going some distance from the Pier and there engaging in the operation of making additions to his vessel which prevented his being immediately ready. She was not ready, and the registration which he obtained was upon a misrepresentation and when that was ascertained, the Pier people were justified in striking her name from the list.

Of course I do not mean to reflect upon the master of the Eva. He appeared to good advantage on the stand and evidently thought he was doing his duty. I think he misconceived his duty in allowing his vessel to go to another part of the city, and leaving it at a place which would be inconvenient as far as the loading berth was concerned, and that led to the whole misunderstanding. If he had at once stopped his vessel and gone to the Berwind-White Company's office and told them his boat was there and waiting for orders and the Berwind-White people had said, "It doesn't make any difference, you can go to your Pier," then I could see how some charge might be made against the Berwind-White Coal Company. But when he went to the Cramp Shipyard for the purpose of making those alterations, not advising anybody that he was going or how long he would be kept there it seems to me he was taking chances for the vessel which have turned against them in this transaction, because when he lost his place and registration, he lost his turn and a turn was not available until the vessel was reinstated, and it was under that reinstated turn she was finally loaded and the loss of time, meantime was suffered. I fail to see how either the Shipping Company or the Berwind-White Company can be held liable.

I therefore dismiss the libel and petition.

(173 Fed. 54.)

HAUGER v. UNITED STATES.

(Circuit Court of Appeals, Fourth Circuit. July 13, 1909.)

No. 828.

1. CRIMINAL LAW (§ 427*) — EVIDENCE — DECLARATIONS OF ALLEGED CO-CONSPIRATOR.

Declarations of an alleged co-conspirator to a witness are inadmissible to prove the existence of the conspiracy as against another party thereto.

[Ed. Note.—For other cases, see Criminal Law, Cent. Dig. § 1012; Dec. Dig. § 427.*]

2. CRIMINAL LAW (§ 427*)—EVIDENCE—RES GESTÆ—DECLARATIONS OF CONSPIRATOR—CONFESSION.

In a prosecution of defendant for counterfeiting, the confession of an alleged co-conspirator while in jail to his keeper, implicating accused in a scheme to manufacture and pass counterfeit money, was inadmissible as res gestæ prior to or in the absence of competent testimony to establish the conspiracy.

[Ed. Note.—For other cases, see Criminal Law, Cent. Dig. § 1012; Dec. Dig. § 427.*]

3. CRIMINAL LAW (§ 424*) — EVIDENCE — CONSPIRACY—SUBSEQUENT DECLARATIONS OF CONSPIRATOR.

Declarations and confessions of an alleged co-conspirator after the offense had been committed and the parties had been arrested were inadmissible against accused.

[Ed. Note.—For other cases, see Criminal Law, Cent. Dig. §§ 1002–1010; Dec. Dig. § 424.*

Admissibility, on trial of joint indictments of acts and declarations of conspirators and codefendants after accomplishment of object, see note to Sorenson v. United States, 74 C. C. A. 472.]

4. CRIMINAL LAW (§ 407*)—EVIDENCE—ADMISSIONS BY ACCUSED.

In criminal cases, alleged admissions by accused from his failure to deny incriminating statements made in his presence are subject to the same rules as applied to confessions.

[Ed. Note.—For other cases, see Criminal Law, Cent. Dig. §§ 898–900; Dec. Dig. § 407.*]

5. CRIMINAL LAW (§ 407*)—EVIDENCE—STATEMENTS OF ANOTHER.

Where only portions of the confession of an alleged co-conspirator had been repeated to defendant, his failure to deny the same did not justify the admission of the entire confession of such co-conspirator.

[Ed. Note.—For other cases, see Criminal Law, Cent. Dig. §§ 898–900, 968; Dec. Dig. § 407.*]

6. CRIMINAL LAW (§§ 419, 420*)—EVIDENCE—HEARSAY.

Hearsay evidence is incompetent to establish any specific fact, the nature of which is susceptible of proof by witnesses who speak from their own knowledge.

[Ed. Note.—For other cases, see Criminal Law, Cent. Dig. §§ 973–983; Dec. Dig. §§ 419, 420.*]

7. CRIMINAL LAW (§ 407*)—EVIDENCE—ADMISSIONS—STATEMENTS BY ANOTHER—FAILURE TO DENY.

Where defendant was under arrest and in charge of an officer in one room of his house, while another officer with defendant's wife searched the adjoining room, incriminating statements made by the wife were inadmissible against accused on the theory that he could have heard and did not deny them, since even if he heard, being under arrest, he might have felt that he was not at liberty to speak.

[Ed. Note.—For other cases, see Criminal Law, Cent. Dig. §§ 898–900, 968; Dec. Dig. § 407.*]

8. CRIMINAL LAW (§ 404*)—DEMONSTRATIVE EVIDENCE—COUNTERFEIT COIN.
In a prosecution for counterfeiting, counterfeit coin alleged to have been obtained by the witness from a police officer in Pittsburg, whose name he could not remember, and who said he obtained the same from M., whom the government claimed was an accomplice, and others obtained from various persons in the same place, whose names the witness could not remember, also claiming to have obtained them from M. before his arrest, was inadmissible against the defendant; there being no proof to connect him with them.

[Ed. Note.—For other cases, see Criminal Law, Dec. Dig. § 404.*]

9. INDICTMENT AND INFORMATION (§ 71*)—SUFFICIENCY.
The true test of the sufficiency of an indictment is not whether it might possibly have been more certain, but whether it sufficiently apprises defendant of what he must be prepared to meet, and is sufficiently explicit to avail him on a subsequent plea of former conviction or acquittal.

[Ed. Note.—For other cases, see Indictment and Information, Cent. Dig. §§ 193, 194; Dec. Dig. § 71.*]

10. COUNTERFEITING (§ 16*)—INDICTMENT—DESCRIPTION OF MONEY.
An indictment charging accused with unlawfully, etc., making and forging a large number, to wit, 110 coins, in resemblance and similitude of the true and genuine coin theretofore coined at the mint of the United States, called a "dollar," contrary to the form of the statute, etc., was not objectionable for failure to charge the kind of dollar alleged to have been counterfeited, whether silver or gold.

[Ed. Note.—For other cases, see Counterfeiting, Cent. Dig. §§ 25, 26; Dec. Dig. § 16.*]

In Error to the Circuit Court of the United States for the Northern District of West Virginia, at Parkersburg.

John M. Hauger was convicted of counterfeiting, and he brings error. Reversed.

Brown & Blizzard and A. G. Hughes, for plaintiff in error.

Reese Blizzard, U. S. Atty., and E. M. Showalter, Asst. U. S. Atty.

Before GOFF and PRITCHARD, Circuit Judges, and BOYD, District Judge.

BOYD, District Judge. John M. Hauger, plaintiff in error, defendant below (and who will hereafter be called the defendant) was tried by jury and convicted in the Circuit Court of the United States for the Northern District of West Virginia, at Parkersburg, at January term, 1908, on an indictment charging him with making counterfeit United States coin. The indictment contained three counts, but the defendant was convicted only on the first count, which reads as follows:

"The grand jurors of the United States, impaneled, sworn, and charged at the term aforesaid, of the court aforesaid, on their oath, present that John M. Hauger, heretofore, to wit, on the —— day of October, in the year 1905, in the said district, and within the jurisdiction of said court, unlawfully and feloniously, knowingly did falsely make and forge a large number, to wit, one hundred and ten coins in the resemblance and similitude of the true and genuine coin, theretofore coined at the mint of the said United States, called a dollar, contrary to the form of the statute in such case made and provided, and against the peace and dignity of the United States."

The judgment of the court was that the defendant be imprisoned at hard labor for a year and a day, and that he pay a fine of $110 and the cost of the prosecution. The defendant sued out a writ of error

from this court, and the case is before us upon exceptions duly taken in the course of the trial and allowed by the court, and assignment of error based thereon. The bills of exception are 11 in number, but we do not deem it necessary to pass upon all of them in order to dispose of the case here. The first exception is based upon the admission of the testimony of John E. Washer, a witness offered in behalf of the United States, who gave in detail an alleged confession made to witness by one George Menear in the city jail of Pittsburg, Pa., on the 31st day of January, 1906; the said George Menear being at the time confined in the said jail under arrest on the charge of passing counterfeit money. Washer testified that Menear's confession to him was as follows:

"That his name was George H. Menear. That he lived at Terra Alta, Preston county, W. Va. That he was released from the penitentiary of Western Pennsylvania in the fall of 1905, and returned to Preston county, W. Va., soon after being discharged. That he went to the home of John M. Hauger, with whom he had been formerly acquainted and who was then living on what is known as the White Farm, near Norinth, Preston county, along about the 1st of October, 1905, and took supper. He and defendant got in his buggy and drove to Hutton Switch, a distance of one-half to three-quarters of a mile from the residence of the defendant, and that on that occasion they entered into an agreement or conspiracy to make and pass counterfeit coin. That soon after this visit the defendant, John M. Hauger, gave to the said Menear ten dollars ($10) to go to Pittsburg and buy material for the purpose of making counterfeit coin, and that he (Menear) purchased said materials, consisting of plaster paris, metal, etc., and returned to the defendant John M. Hauger's home, where he and the defendant, Hauger, attempted to make counterfeit coins, at first meeting with poor success, but that they continued to experiment with the molds and material, and afterwards manufactured one hundred and ten (110) counterfeit silver dollars. That the said George Menear further said that the defendant, John M. Hauger, went to Oakland, Md., in the fall of 1905, and purchased from one John Davis a small portion of lead to be used in the making of said counterfeit coins, and also a small pair of scales, and that at the time said lead and scales were purchased the defendant, John M. Hauger, offered in payment of same to the said John Davis a silver dollar. That said Davis questioned the dollar, whereupon Hauger took it back, and Hauger told him about the matter when he came home, and refused to try to pass any more. That he, George Menear, had taken the counterfeit money so made and had gone to various towns and cities, among others, Rowlesburg, W. Va., Clarksburg, W. Va., Fairmont, W. Va., and Martinsburg, W. Va., where he had passed the said counterfeit coin, and that he had given to the defendant, Hauger, $40 or $45 of the profits arising from the making and passing of said counterfeit coin. That George Menear further said that on the same day that the defendant purchased the lead and scales from John Davis as aforesaid, he, the defendant, drew out of the bank $25, and that there were with it a number of silver dollars, 10 or 12 silver dollars. That George Menear further stated to the said John E. Washer that the molds in which the said counterfeit coins were made were made in the upstairs of the house in which the defendant, Hauger, lived, and that he and the said defendant, Hauger, made said molds during the daytime, and that the counterfeit coins so manufactured were made downstairs in the kitchen at night, and that the said George Menear further states that on one occasion while so manufacturing said counterfeit coins in the kitchen that he and the said defendant Hauger killed a rat behind the wall paper on the kitchen wall by sticking a knife through the paper, and into the rat, and that they threw the rat out of the kitchen window. That the said Menear still further stated to said Washer that the molds in which the said counterfeit coins were so made were buried by himself and the defendant Hauger on the White Farm back of and near to the house in which the said Hauger lived at the time said coins were made on the bank of a small stream and near a big rock, and the said Menear designated by a plat or diagram the location where said molds were buried and could be found. He, the said

Menear, further stated to the said Washer, so he says, that the ladle used in the pouring of the metal in manufacturing said coins was in the defendant's house, and that a small bottle of chloride of silver was also left in the defendant's possession at the White Farm."

The defendant's counsel objected to the admission of this testimony, was overruled by the court, and duly excepted. Primarily the court seems to have admitted this statement of Menear on the ground that it was the declaration of a co-conspirator, for the court charged the jury:

"That the jury is instructed that, if they believe from the evidence that the defendant was an accomplice or co-conspirator with the witness George Menear for the making or passing of counterfeit coin, that any statement or confession made by Menear while conspiracy between him and defendant existed is evidence against the defendant, notwithstanding the fact that the witness Menear may not be allowed to testify as a witness on the trial."

We take it that the last clause of this instruction to the jury in which it is intimated by the court that Menear may not be allowed to testify as a witness on the trial is based upon the fact that Menear had been convicted of counterfeiting and had served a term in the penitentiary, and was, therefore, disqualified to be a witness.

It is not necessary, however, to discuss this proposition. The point which we shall consider is whether, under the circumstances, the alleged confession of Menear to Washer was admissible as the declarations of a co-conspirator. It is a well-settled principle of evidence that in a trial on an indictment for conspiracy after the unlawful agreement has been shown the acts and declarations of co-conspirators are admissible as a part of the res gestæ. By the act of conspiring together the conspirators have jointly assumed to themselves as a body the attribute of individuality, so far as regards the prosecution of the common design; thus rendering whatever is said or done by any one in furtherance of that design a part of the res gestæ, and therefore the act of all. For these reasons the conspiracy must be proved prima facie or such acts, and declarations are inadmissible. 3 Greenleaf on Evidence (16th Ed.) § 94, note 1. In this case there was an entire absence of evidence to prove the unlawful combination between Menear and the defendant. It is true that Menear stated to Washer, so Washer testified, that about the 1st of October, 1905, he, Menear, and the defendant entered into an agreement or conspiracy to make and pass counterfeit coin. But as to that fact the declaration of Menear was only hearsay. There is no rule which renders the declarations of an alleged co-conspirator, given secondhanded, admissible to prove the existence of the conspiracy. Such declarations are made competent only after the conspiracy has been shown to exist. In this view the alleged declarations of Menear were clearly incompetent. If, however, the unlawful combination between Menear and the defendant had been established so as to make the acts and declarations of Menear competent as evidence on the trial of the defendant, such acts and declarations of Menear as were committed or made in the course of the conspiracy and in furtherance of its object would have been admissible. The declarations of Menear which were admitted on the trial of this case were, as the record shows, after the overt act had been committed and the

purposes of the alleged conspiracy had been accomplished. For these reasons the said declarations were inadmissible as evidence against the defendant.

In this view of the case it was error to give the instruction above recited, and it was also error to refuse the following instruction to the jury which was requested by defendant's counsel:

"Instruction B. The court instructs the jury that the acts and declarations of a conspirator after an offense is committed may be received against the party making them, but not against his co-conspirators; and that if the jury believes from the evidence that the alleged conspiracy between defendant and George Menear had terminated at the time of the alleged confession of the said George Menear to John E. Washer, in Pittsburg, Pa., on January 31, 1906, and as detailed by said Washer, then the admissions and confessions of the said George Menear implicating the defendant cannot be considered as evidence against said defendant in this case."

It is argued, however, in behalf of the United States that the statements made by Menear to Washer were repeated by Washer to the defendant, and that defendant's answers at the time were competent to be used against him on the trial. Undoubtedly the declarations or admissions voluntarily made by a person in the course of conversation are admissible as testimony against him, but in criminal cases such declarations or admissions are admissible under the same rules as confessions. Only certain portions of the alleged confession of Menear are shown by the record to have been repeated to the defendant by Washer, and the fact that defendant may have said something when these portions were called to his attention, which tended to corroborate what Menear said, did not open the way to have the entire statement of Menear detailed in presence of the court and jury as evidence against the defendant. Aside from this, the Supreme Court of the United States has expressed itself in regard to the value of this class of testimony. In the case of Dalton v. United States, 63 U. S. 442, 16 L. Ed. 395, it is said:

"In all cases the testimony of admissions or loose conversations should be cautiously received, if received at all. They are incapable of contradiction. They are seldom anything more than vague impressions of a witness of what he thinks he has heard another say—stated in his own language, without the qualifications or restrictions, the tone, manner, or circumstances, which attended their original expression."

And we may say that, the defendant being at the time the conversation between him and Washer is alleged to have taken place under arrest and in Washer's custody, it is questionable whether what defendant said to Washer is competent at all. See Bram v. United States, 168 U. S. 532, 18 Sup. Ct. 183, 42 L. Ed. 568. As we have said, all of Washer's testimony detailing the alleged confession of Menear, except such portions of it as Washer states was the subject of conversation between him and defendant, is only hearsay. It is not necessary to refer to any rule or to cite authority in regard to the inadmissibility of hearsay testimony, but we will call attention to one leading case on that subject. Queen v. Hepburn, 11 U. S. 290, 3 L. Ed. 348. In this case Chief Justice Marshall, delivering the opinion of the court, says:

"That hearsay evidence is incompetent to establish any specific fact which fact is in its nature susceptible of being proved by witnesses who speak from their own knowledge."

And in that case it is said:

"It was very justly observed by a great judge that 'all questions upon the rules of evidence are of such vast importance to all orders and degrees of men; our lives, our liberty and our property are all concerned in the support of these rules, which have been matured by the wisdom of ages and are now revered for their antiquity and the good sense in which they are founded.' One of these rules is that 'hearsay' evidence is in its own nature inadmissible. That this species of testimony supposes some better testimony which might be adduced in the particular case is not the sole ground of its exclusion. Its intrinsic weakness, its incompetency to satisfy the mind of the existence of the fact, and the frauds which might be practiced under its cover combine to support the rule that hearsay evidence is totally inadmissible."

So strictly have the courts guarded and applied the rule that hearsay has been held incompetent even in aid of human freedom.

Another exception is based on the fact that, when Washer had arrested the defendant and had placed him in custody of one John W. Davis at defendant's residence, Washer proceeded to search the residence, and was accompanied by defendant's wife. In the course of this search Washer and the defendant's wife went into the kitchen, a room adjoining the sitting room, in which the defendant and Davis were left. Washer further stated that while in the kitchen he asked Mrs. Hauger for the ladle and the bottle of chloride of silver which Menear had said were there, and she denied knowing anything about them whatever. Washer then testified that he found a bottle of chloride of silver in a box on a shelf in the kitchen, and Mrs. Hauger said that Menear told her that it was a bottle of medicine which he had been using for a sore hand, and had given it to her to keep for him. In further search, he, Washer, picked up a ladle, and said to Mrs. Hauger what is that, and her reply was, "Oh, well." Washer also stated on his examination that he did not know whether Hauger heard the conversation between himself and Mrs. Hauger but that he could have heard it, had he been listening. Defendant's objection to this testimony was overruled by the court, and it was admitted. The rule of evidence involved in this exception is based upon the silence of the defendant when his wife made the alleged declarations to Washer. Silence of a party in presence of a statement made by another may be put in evidence against him on the ground that from his silence his assent to what is said is inferred. To give such silence, however, effect as an admission, the party charged with it must have been in a position to explain. Before acquiescence in the language or conduct of others can be assumed as a concession of the truth of any particular statement, or of the existence of any particular fact, it must plainly appear that the language was heard or the conduct understood. Wharton's Criminal Evidence (9th Ed.) § 680. In commenting on this principle, Mr. Wharton cites the case of Commonwealth v. Brailey, 134 Mass. 530, in which Judge Morton, Chief Justice, says:

"Declarations made in the presence of a party, to which he makes no reply, are sometimes competent, as equivalent to tacit admission by him. This depends on whether he heard and understood them, whether he is at liberty to

reply, whether he is in custody or under any restraint or duress, and whether the statements are made by such persons and under such circumstances as naturally to call for a reply."

The conversation between defendant's wife and Washer was calculated, and no doubt did, prejudice the rights of defendant in the minds of the jury, and yet it was admitted to go to the jury when it was not clearly shown that defendant heard it. Even if he had heard what she said he was under arrest, and may not have felt that he was at liberty to speak. Further than this, we do not see that the defendant was called upon, under the circumstances, to make an explanation, for the wife said nothing connecting him, in any way, with the articles found. If, as stated by Washer, the wife told contradictory stories in regard to the bottle of chloride of silver, this fact should not have gone to the jury as evidence tending to establish defendant's guilt, and testimony of her ejaculation "Oh, well," upon the finding of the ladle is equally objectionable. In our opinion, therefore, defendant's objection to the testimony referred to in both of the exceptions we have considered should have been sustained, and that it was error in the trial court to admit it.

Another exception is based on the admission (over defendant's objection) of testimony by witness, Washer, as follows:

"The said witness exhibited before the jury certain alleged counterfeit coins, to wit, eight dollars in likeness and similitude of the silver dollars of the United States, who stated that he obtained those alleged counterfeit dollars from various persons in the city of Pittsburg. Two of alleged counterfeit dollars, he, the said witness Washer, claimed he obtained from a certain police officer in Pittsburg, whose name he did not remember, the said officer claiming to Washer that he had taken the two said dollars from the person of said George Menear on the 14th of December, 1905, that being the day said Menear was arrested, said Washer further stating that the remaining six alleged counterfeit dollars he (Washer) had obtained from various persons in Pittsburg, whose names he did not remember, but who told him (Washer) that they had received the said alleged counterfeit dollars from the said George Menear previous to the date of his arrest as mentioned above."

This testimony was clearly incompetent. There was nothing to show the connection of the defendant with the counterfeit coins exhibited to the jury by Washer. If it were taken for granted that there were circumstances tending to prove connection between the defendant and Menear in making and handling counterfeit money, there was no evidence that Menear ever had these coins in his possession, or had anything whatever to do with them. Washer stated that he obtained the coins, two of them, from a policeman in Pittsburg, whose name he did not know, and who told him at the time that he (the policeman) got them from Menear; that the other six were obtained from persons in Pittsburg, who Washer did not know, and who also told him that they got them from Menear. The statements of the persons from whom the coins were obtained were hearsay, and were incompetent as evidence upon the grounds which we have heretofore stated. We do not deem it necessary to further discuss the inadmissibility of this testimony; for, as we before said, it was incompetent, and its admission was therefore error.

We shall treat of but one other exception in the case, and that is the one founded on the refusal of the court to sustain defendant's de-

murrer to the indictment upon which he was convicted. We have set out the count heretofore in full. By the demurrer the defendant challenges its sufficiency. We think the court was right in overruling the demurrer.

The draftsman in framing this indictment has followed substantially the words of the statute. The defendant is advised of the crime for which he is called to answer, namely, that he unlawfully, feloniously, knowingly did falsely make and forge a large number, to wit: one hundred and ten coins in the resemblance and similitude of the true and genuine coin theretofore coined at the mint of the said United States called a dollar, etc. The true test of the sufficiency of an indictment is not whether it might possibly have been made more certain, but whether it sufficiently apprises defendant of what he must be prepared to meet, and that it be sufficiently explicit to avail the defendant upon subsequent plea of former conviction or former acquittal. Defendant's objection to the indictment was that it did not describe the kind of dollar alleged to have been counterfeited, whether a silver or gold dollar. Such description was not necessary. It would have been only evidential. Matters of evidence as distinguished from the facts essential to the description of the offense need not be averred. There was no error in overruling the demurrer. However, for the errors which we have before indicated, the judgment of the Circuit Court should be reversed to the end that venire de novo be had.

Reversed.

(173 Fed. 61.)

STAMEY v. HEMPLE.

(Circuit Court of Appeals, Ninth Circuit. January 3, 1910.)

No. 1,683.

1. FRAUDS, STATUTE OF (§ 131*)—CONTRACT RELATING TO LAND—OPTION—EXTENSION BY PAROL.

An oral contract, extending an option to purchase certain mining claims, and to waive a forfeiture in consideration of defendant's doing the assessment work on the claims required by law for the year 1907, was not within the statute of frauds, under the rule that, if an agreement required to be in writing under the statute is modified by a subsequent oral agreement, which does not in itself constitute a contract within the statute of frauds, the modification is valid, especially where it merely amounts to an extension of the time of performance of the written contract.

[Ed. Note.—For other cases, see Frauds, Statute of, Cent. Dig. § 284; Dec. Dig. § 131.*]

2. MINES AND MINERALS (§ 83*) — ACTION FOR BREACH OF CONTRACT — SUFFICIENCY OF COMPLAINT.

A complaint which alleges that plaintiff and defendant entered into a written contract by which plaintiff agreed to sell to defendant certain mining claims, payments to be made at stated times, and that in consideration of an extension by plaintiff of the time for making the final payment from October 1st to December 1st defendant agreed to do the assessment work for that year, but that he failed to complete the payment or to do the work, in consequence of which the claims were forfeited, relocated by others, and lost to plaintiff, to his damage to the extent of their value,

for which he asks judgment, states a cause of action for breach of the contract and for the recovery of damages in some amount, the true measure of which is a matter to be determined on the proofs.

[Ed. Note.—For other cases, see Mines and Minerals, Dec. Dig. § 83.*]

In Error to the District Court of the United States for the Third Division of the Territory of Alaska.

Action by T. P. Stamey against S. A. Hemple. A demurrer was sustained to plaintiff's complaint, and he brings error. Reversed and remanded.

In an action to recover damages the plaintiff alleged in his complaint in substance the following: That on March 25, 1907, the plaintiff, being the owner of seven certain lode mining claims, entered into an agreement with the defendant for the sale thereof, and gave to the defendant an option to purchase the same for the sum of $25,000, of which $1,000 was then and there paid, $4,000 was to be paid on June 25, 1907, and $20,000 was to be paid on October 1, 1907; that a deed for said claim was executed by the plaintiff to the defendant, and deposited in escrow, to be delivered to the defendant at the time of the final payment; that on June 25, 1907, the defendant paid plaintiff the sum of $4,000; that on or about October 3, 1907, the final payment being due and unpaid, the plaintiff demanded of defendant the payment thereof, and notified him that he was able, prepared, and willing to carry out all the terms of the option on his part to be performed, and that if said payment was not then made he would declare the forfeiture of all the rights of the defendant in and to said mining claims, and demand a return of his deed so held in escrow; that the defendant then stated to plaintiff that if the latter would waive the forfeiture and grant an extension of time to December 1, 1907, in which to make the final payment, he, in consideration of such extension of time, would do or cause to be done upon said mining claims the assessment work for the year 1907 as required by law; that thereupon the plaintiff and the defendant entered into an oral agreement, whereby the plaintiff waived the forfeiture of defendant's rights under said option and granted him until December 1, 1907, within which to make said final payment, and the defendant, in consideration of said waiver and said extension of time, promised to do or cause to be done upon said mining claims the assessment work for the year 1907, and the plaintiff did then and there waive such forfeiture, and did extend the time for the final payment to December 1, 1907, and notified the depositary to hold the deed until December 1, 1907, under the terms of said agreement; that the defendant failed, refused, and neglected to perform his part of the terms of said oral agreement, and did none of the assessment work which he so agreed to do upon the mining claims; that on January 1, 1908, owing to the defendant's failure to do said assessment work, all of said mining claims reverted to the public domain, and became open to relocation, and on said date were all relocated and appropriated, whereby the plaintiff lost all his right, title, and interest therein; that the plaintiff relied upon defendant's promise to do or cause to be done said assessment work, and he had no knowledge or information that the same had not been done, or that the defendant had failed to perform his part of said oral agreement, until on or about January 5, 1908, and that until the last-named date the deed remained in escrow; that the reasonable value of said mining claims is $25,000, which sum is the measure of plaintiff's damages resulting from the failure of defendant to perform the terms of the said oral agreement; and judgment was demanded for that amount. A demurrer to the complaint was sustained for want of facts sufficient to constitute a cause of action, and thereupon judgment was entered dismissing the action. The plaintiff brings the case into this court, assigning error in the ruling of the court below in sustaining the demurrer.

R. F. Lewis, Richard C. Harrison, and Ostrander & Donohoe, for plaintiff in error.

Edmund Smith, T. C. West, and West & De Journel, for defendant in error.

Before GILBERT and ROSS, Circuit Judges, and HUNT, District Judge.

GILBERT, Circuit Judge (after stating the facts as above). The complaint is said to be demurrable on two distinct grounds: First, that the oral agreement to extend the life of the option is void as within the statute of frauds, so that there was no consideration for the defendant's promise to do the assessment work; and, second, that, conceding the contract to be valid, the measure of the plaintiff's damages was not the value of the mining claims which he lost.

If an agreement required to be in writing under the statute of frauds is modified by a subsequent oral agreement, which does not in itself constitute a contract within the statute of frauds, the modification is valid and binding upon the parties; and it is generally held that, if the subsequent oral agreement is merely for a change in the time of performance of a written contract, it is valid. 20 Cyc. 287; Ward v. Matthews, 73 Cal. 13, 14 Pac. 604; Scheerschmidt v. Smith, 74 Minn. 224, 77 N. W. 34; Cummings v. Arnold, 3 Metc. (Mass.) 486, 37 Am. Dec. 155; Stearns v. Hall, 9 Cush. (Mass.) 31; Whittier v. Dana, 10 Allen (Mass.) 326; Hurlburt v. Fitzpatrick, 176 Mass. 287, 57 N. E. 464; Kissack v. Bourke, 224 Ill. 352, 79 N. E. 619. Upon the doctrine of these decisions and the weight of authority, we are of opinion that the oral agreement set forth in the complaint in this case was not void as within the statute of frauds. If it was not void, it follows that there was no want of an adequate consideration for the promise of the defendant to do the assessment work on the mining claims. The consideration was the agreement of the plaintiff to waive the forfeiture and extend the time of performance of the contract for a period of 60 days.

As the demurrer was a general demurrer to the complaint for want of facts sufficient to constitute a cause of action, it is unnecessary to enter into a discussion of the question whether or not the facts which are set forth to show special damages are sufficient for that purpose, as in any view the plaintiff is entitled to recover damages in an amount equal to the value of the annual assessment work which the defendant had promised to do upon the mining claims, and the burden of proof would rest upon the defendant to meet the allegations and proof of special damages by showing that the plaintiff might have saved himself from the loss arising from the breach of the contract by a trifling expense or with reasonable exertions.

The judgment is reversed, and the cause is remanded for further proceedings.

(173 Fed. 67.)

EASTERN OREGON LAND CO. v. BROSNAN et al.

SAME v. SIMPSON.

(Circuit Court of Appeals, Ninth Circuit. September 7, 1909.)

Nos. 1,694, 1,695.

ADVERSE POSSESSION (§ 7*)—AGAINST WHOM PRESCRIPTION MAY BE CLAIMED—PUBLIC LANDS.

Possession of land, although in admitted subordination to the United States, from which the person in possession is seeking to obtain title, may nevertheless be adverse to every one else, and, when continued for the statutory period, may be set up in bar to an action by one claiming under a prior grant.

[Ed. Note.—For other cases, see Adverse Possession, Cent. Dig. §§ 33–40; Dec. Dig. § 7.*]

In Error to the Circuit Court of the United States for the District of Oregon.

Huntington & Wilson and E. S. Pillsbury, for plaintiff in error.

W. H. Brooke and F. M. Saxton, for defendants in error.

Before GILBERT and ROSS, Circuit Judges, and HUNT, District Judge.

ROSS, Circuit Judge. These cases were argued and submitted together. Each is an action of ejectment brought to recover the possession of a certain tract of land situated in Malheur county, Or. The answer in each case put in issue the plaintiff's alleged title, and, among other things, set up in defense the statute of limitations.

It is conceded that in each case the sole question arose out of the plea of the statute of limitations, which was sustained in the court below. While the evidence went to show that in each case the defendants and their predecessors in interest held adversely to the plaintiff for the statutory period, it is stipulated that they did not so hold against the government of the United States, but, on the contrary, during such possession, sought title to the land from the government.

It does not seem to be questioned, certainly the general rule is well settled, that adverse possession of land, though held in admitted subordination to the title of the government, may nevertheless be adverse to every one else. Missouri Valley Land Co. v. Wiese, 208 U. S. 234, 28 Sup. Ct. 294, 52 L. Ed. 466; Iowa Railway Co. v. Blumer, 206 U. S. 482, 27 Sup. Ct. 769, 51 L. Ed. 1148. The point made on behalf of the plaintiff in error, however, is that, to render a possession adverse under the law of the state of Oregon, it must be held under a claim of title against the whole world; that the Oregon statute upon the subject is so construed by the Supreme Court of that state in the cases of Beale v. Hite, 35 Or. 176, 57 Pac. 322, 58 Pac. 102, Altschul v. O'Neill, 35 Or. 202, 58 Pac. 95, and Altschul v. Clark, 39 Or. 321, 65 Pac. 991, and that in such a matter the federal courts will always be governed by the decision of the highest court of the state.

It is true that at the time of the filing of the brief of the plaintiff in error, and at the time of the oral argument of these causes, the cases of Beale v. Hite, Altschul v. O'Neill, and Altschul v. Clark stood as the law of Oregon in respect to the character of adverse possession

required by the Oregon statute; but by the very recent decision of the Supreme Court of that state, made in the case of Boe v. Arnold (decided June 1, 1909) 102 Pac. 290, the previous cases of Beale v. Hite, Altschul v. O'Neill, and Altschul v. Clark were expressly overruled—the court concluding its opinion in these words:

"In view of the authorities cited, and especially in the light of the views so lately expressed by the highest tribunal of the nation, we now hold that one claiming title to the land by adverse possession for a period of 10 years as against all persons, but recognizing the superior title of the United States government, and seeking in good faith to acquire that title, may assert such adverse possession as against any person claiming to be the owner under a prior grant."

This leaves the general rule above alluded to applicable to the present cases, with the necessary result, in view of the record, that the judgment in each case must be affirmed.

Ordered accordingly.

(173 Fed. 1.)

PENNSYLVANIA R. CO. v. INTERNATIONAL COAL MINING CO.

INTERNATIONAL COAL MINING CO. v. PENNSYLVANIA R. CO.

(Circuit Court of Appeals, Third Circuit. October 6, 1909.)

No. 36.

1. CARRIERS (§ 32*) — INTERSTATE COMMERCE ACT — DISCRIMINATION BETWEEN SHIPPERS—"SIMILAR CIRCUMSTANCES AND CONDITIONS."

In Interstate Commerce Act Feb. 4, 1887, c. 104, § 2, 24 Stat. 379 (U. S. Comp. St. 1901, p. 3155), which prohibits discrimination between shippers under "substantially similar circumstances and conditions," such phrase relates to the circumstances and conditions of carriage only, and does not include matters affecting individual shippers; and a railroad company is not authorized to charge one shipper of coal a lower rate than is charged another shipper between the same terminals, because the former is shipping under contracts extending over a term of years, based on lower rates which were in force when such contracts were made, while the other shipper has no such contracts.

[Ed. Note.—For other cases, see Carriers, Cent. Dig. § 85; Dec. Dig. § 32.*]

2. CARRIERS (§ 32*)—INTERSTATE COMMERCE LAW—DISCRIMINATION IN RATES.

Where a railroad company operating an interstate road treated points on a connecting road which it also operated as within a certain coal district, from all points in which, whether on such line or its own line, it made and published the same rates, such road for freight purposes was a part of its line, and its relations with the owner thereof are immaterial.

[Ed. Note.—For other cases, see Carriers, Cent. Dig. § 83; Dec. Dig. § 32.*]

3. CARRIERS (§ 36*)—ACTION FOR DISCRIMINATION IN RATES—MEASURE OF DAMAGES.

In an action by a coal mining company against a railroad company under Interstate Commerce Act Feb. 4, 1887, c. 104, § 8, 24 Stat. 382 (U. S. Comp. St. 1901, p. 3159), to recover damages because of discrimination in rates made in favor of other shippers between the same terminals, the measure of damages recoverable is the difference between the amount paid by plaintiff and the amount it would have paid at the lowest rate charged on any other shipments carried under substantially the same circumstances and conditions during the same time, and not the difference between the rates paid by it and the average rate paid by any other shipper.

[Ed. Note.—For other cases, see Carriers, Cent. Dig. § 95; Dec. Dig. § 36.*]

4. CARRIERS (§ 36*)—INTERSTATE COMMERCE LAW—ACTION FOR DISCRIMINATION IN RATES.

To entitle a shipper to maintain an action against a railroad company under Interstate Commerce Act Feb. 4, 1887, c. 104, § 8, 24 Stat. 382 (U. S. Comp. St. 1901, p. 3159), to recover damages for being unjustly discriminated against in rates, it is not necessary that he should have paid the freight charged under protest.

[Ed. Note.—For other cases, see Carriers, Cent. Dig. § 95; Dec. Dig. § 36.*]

5. ABATEMENT AND REVIVAL (§ 41*)—TRANSFER OF TITLE BY PLAINTIFF.

A pending action to recover damages is not abated by a judicial sale of the plaintiff's property, including the chose in action in suit, and proof of such sale constitutes no defense to the action.

[Ed. Note.—For other cases, see Abatement and Revival, Cent. Dig. § 212; Dec. Dig. § 41.*]

6. CARRIERS (§ 36*)—INTERSTATE COMMERCE ACT—ACTION FOR DISCRIMINATION IN RATES.

A coal shipper, which, with others, was given rebates by a railroad company in violation of law, cannot maintain an action against the company to recover damages for discrimination because others were granted larger rebates.

[Ed. Note.—For other cases, see Carriers, Cent. Dig. § 95; Dec. Dig. § 36.*]

In Error to the Circuit Court of the United States for the Eastern District of Pennsylvania.

Action by the International Coal Mining Company against the Pennsylvania Railroad Company for discrimination. Judgment for plaintiff, and both parties bring error. Affirmed.

Francis I. Gowen and Sellers & Rhoads, for Pennsylvania R. Co.

James W. M. Newlin, for International Coal Mining Co.

Before DALLAS, GRAY, and BUFFINGTON, Circuit Judges.

BUFFINGTON, Circuit Judge. In the court below the International Coal Mining Company, herein called the "Mining Company," recovered a verdict against the Pennsylvania Railroad Company, herein called the "Railroad," for alleged unjust discrimination in freight charges. To a judgment entered on such verdict, both parties sued out writs of error. We will first consider that of the Railroad.

It seems the Mining Company shipped coal over the Railroad's lines from its mines in bituminous regions of Pennsylvania to tide water from 1894 to 1901. The court excluded evidence bearing on the shipments prior to July 29, 1898, on the ground they were barred by the statute of limitations. As to the shipments from that date to April, 1899, the evidence showed the Mining Company paid the same rate as other shippers. Consequently there was no recovery for that period. From April 1, 1899, to 1901, it was conceded the Mining Company paid a higher rate than other shippers, and the verdict covered shipments during such period. The suit is based on section 2 of Act Feb. 4, 1887, c. 104, 24 Stat. 379 (U. S. Comp. St. 1901, p. 3155), which provides:

"If any common carrier subject to the provisions of this act shall, directly or indirectly, by any special rate, rebate, drawback, or other device, charge, demand, collect, or receive from any person or persons a greater or less com-

pensation for any service rendered, or to be rendered, in the transportation of passengers or property, subject to the provisions of this act, than it charges, demands, collects, or receives from any other person or persons for doing for him or them a like and contemporaneous service in the transportation of a like kind of traffic under substantially similar circumstances and conditions, such common carrier shall be deemed guilty of unjust discrimination, which is hereby prohibited and declared to be unlawful."

The Railroad sought to escape liability for such excess freight charges during said last-named period by reason of the following facts: On April 1, 1899, by its published tariff, it advanced its coal freight rates. At that time many shippers from the Mining Company's vicinity to seaboard had outstanding contracts to make coal deliveries over a series of years. These contracts were based on the freight rates in force when they were made. The Railroad, feeling its new and higher rates would entail serious loss on shippers bound by such contracts, herein called "contract coal," continued in the case of such contracts the old and lower freight rates. This was done openly, and, indeed, the Mining Company was informed, if it had such contracts, its coal would be carried at the old rate. It had no such contracts, and therefore it was charged the higher rate for what was called "free coal," and the verdict is based on such differential. The Mining Company's shipments were in part from the Huntingdon & Broad Top Railroad, which was a separate company from the Railroad, but was operated by it. No shipments of contract coal were made from the Huntingdon & Broad Top Railroad. The other shipments of the Mining Company, as well as shipments of contract coal by other shippers, were made from the Clearfield district. The court submitted to the jury the question whether the Huntingdon & Broad Top Railroad was part of the Clearfield district, and its verdict established that such was the case. Now the Railroad sought to draw a distinction between shipments of "contract coal" and "free coal" as above described, requesting the court to charge:

"If the jury believe that it would tend to the benefit of its shippers, and would also tend to secure for it a larger volume of business, the carrier is not guilty of discrimination forbidden by the interstate commerce act, because it carries, at rates of freight in force at the time such contracts were entered into, coal embraced in and shipped under contracts extending for a period of time, even though at the same time it may be charging a higher rate on coal not covered by or embraced in contracts of such a character, provided it extends the benefit of the lower rates to all shippers having such contracts and shipping coal thereunder."

We are thus brought face to face with the question whether the existence of these contracts created a dissimilarity of circumstance and condition under which the service of carriage was rendered. To us the reading of the act is clear. The act contemplates "compensation for any service rendered." Now it is manifest that "service rendered" is the physical service of carriage. Elsewhere it is spoken of as "a like and contemporaneous service." Such service is "service in the transportation," it is a "service in the transportation of a like kind of traffic"; and it is a service in transportation "under substantially similar circumstances and conditions." The law having in view the carriage of freight and equal rates to all, it is clear to us that the words "sub-

stantially similar circumstances and conditions," as used in this subsection, are those which affect transportation, and not those which involve personal conditions or contractual relations between one particular shipper and the carrier, but are such things only as are circumstances of carriage generally.

In Wight v. United States, 167 U. S. 513, 17 Sup. Ct. 822, 42 L. Ed. 258, it was sought to differentiate the service performed by the different terminal facilities of the two shippers at their respective warehouses; but the court held these were not the circumstances and conditions of the act, but that the circumstances and conditions the act contemplated were those which affected the actual carriage of the freight, using this language:

"It was the purpose of this act to enforce equality between shipppers, and it prohibits any rebate or other device by which two shippers, shipping over the same line, the same distance, under the same circumstances of carriage, are compelled to pay."

And that this phrase, "circumstances of carriage," was a carefully chosen one, limiting the circumstances to such as affected haulage of freight, is shown in Interstate Com. Com. v. Alabama R. Co., 168 U. S. 166, 18 Sup. Ct. 49 (42 L. Ed. 414), where, referring to Wight v. United States, supra, the court say:

"We there held that the phrase 'under substantially similar circumstances and conditions,' as used in the second section, refers to the matter of carriage, and does not include competition between rival routes."

It follows, therefore, that if these circumstances and conditions of section 2 are those which affect haulage, and do not include competition between rival routes, they do not include individual elements affecting individual shippers. The purpose of the section is to afford identity of rate for substantial identity of transportation service, and anything that does not aid in determining what is such substantial identity of haulage does not aid in the application of the section. Evidently it was with this view the court purposely said in that part of its charge here assigned for error:

"It is contended by the defendant that, if shippers have overlapping contracts, they can be classified. The interstate commerce act authorizes the classification of commerce. You can ship coal for one price per ton, iron pipe for another, and pig iron for another. In other words, there is a classification of commerce. Whether they could classify overlapping contracts, schedule them, and make them public or not, is not a question in this case; but it is a question whether or not, when they schedule a certain figure for the transportation of property from one point to another as their tariff rate, and make that public, they are bound by it, and the law is that they cannot have a private agreement, overlapping or not overlapping, which gives a competitor, during the contemporaneous shipments, a return or an advantage over the published rate."

Where, as in this case, the Railroad made a published rate for coal from the Clearfield district to tide water, and the Railroad charged the Mining Company for this haulage the published rate, but charged other shippers for the same haulage lower rates, it is clear it violated the second section, in that, as said by the Supreme Court:

"Two shippers, shipping over the same line, the same distance, under the same circumstances of carriage, are compelled to pay different prices therefor."

Whether, indeed, the railroad might have classified contract coal in one class and free coal in another is not before us; for in point of fact it made no such classification and made no differential rates for such coal. What it did was to give a rate on coal from the Clearfield district to seaboard to one shipper and deny it to another, and thereby it violated the express provisions of the statute. The like circumstances and conditions are those which arise within the field of haulage, and not those which exist outside. In this case the Railroad charged to one shipper a rate of haulage, and, the coal of the other shipper being hauled from the same initial locality to the same terminal point, the haulage was identical, and therefore the freight should be the same. To hold otherwise, and to say that because one shipper had made a prior contract, based on lower freight rates, the service was thereby made dissimilar, is not only to contend for a physical non sequitur, but it introduces a practice fraught with possibilities of unjust discriminations and fraudulent rebates.

The next question concerns the shipments of the Mining Company from the Huntingdon & Broad Top Railroad Company. Just what the relation of that road is to the Pennsylvania Railroad we are not exactly shown, either in the proofs or briefs. The proofs do show, however, that the Huntingdon & Broad Top Railroad was within what for freight purposes was known as the "Clearfield district," that the rate from it was obtained from the Pennsylvania Railroad and was the general Clearfield district rate, and that the Mining Company had no dealings or rate quotations from the Huntingdon & Broad Top Railroad. The portion of the charge which reads:

"It is contended by the defendant that all the shipments made by the plaintiff during this time, starting from the Huntingdon & Broad Top Railroad, were not in the Clearfield district, and for that reason they were not a like service rendered under substantially similar conditions and circumstances. The plaintiff contends that the shipments on the Huntingdon & Broad Top Railroad and the point of shipment from which the plaintiff shipped its coal on that road are in the Clearfield district, and that the evidence in this case shows that they were treated as being in the Clearfield district. You will say which is correct. You will say whether the evidence shows it is in the district, or is not in the district. If it is in the district, the shipments from that point would be from the same initial point. If it is not in the district, they would not be from the same initial point. It is a matter for you,"

—is here assigned for error. We find no error in such language. Whatever may have been its relations with the Broad Top Railroad, the Pennsylvania, for freight purposes, chose to include it within the Clearfield district, published rates from it as within such district, quoted such rates to the Mining Company, and collected the same. By such acts the jury had a right to infer the Broad Top Railroad was, so far as the purposes of this case went, and for freight purposes, a part of the Pennsylvania Railroad system. Thus one of the witnesses, speaking of the Broad Top as a separate organization, operated by its own officers, says:

"We didn't know it in freight rates. We didn't ask them for freight rates. We never obtained any freight rates from them. There was no difference in getting a freight rate on Broad Top shipments from a Sonman or Clearfield county shipment."

He further said:

"Q. Taking up the matter of the Huntingdon & Broad Top, they were in the Clearfield region? A. Yes; under the tariff rates. Q. And your dealings as to freight were entirely with the Pennsylvania Railroad; that is to say, the Pennsylvania fixed a rate which covered the movement on the Huntingdon & Broad Top? A. Yes. Q. So that was one transaction, without regard to the starting point, and that was in the Clearfield region—one transaction from start to finish, delivery point, with the Pennsylvania Railroad? A. Yes."

Under these proofs we think the court was right in submitting the question to the jury whether shipments over the Pennsylvania Railroad originating on the Huntington & Broad Top were shipments from the Clearfield district and embraced within the rate established for that district by the Pennsylvania Railroad; for by the first section of the act the term "railroad" is defined to mean:

"All the road in use by any corporation operating a railroad, whether owned or operated under a contract, agreement or lease."

That being established, the shipments of the Mining Company were entitled to the same rates for like shipments the railroad gave any other like shipper in the Clearfield district, although the shipments of the latter did not originate in that particular part of the Clearfield district covered by the Huntingdon & Broad Top. As a matter of policy it may well be that it would be to the advantage of railways to make such an arrangement; but Congress has not left these matters open to them. It has laid down the broad, simple principle of like rate for like service, and has not authorized the railroad to make other extrinsic considerations a ground for giving different rates for the same service. For, as was said in London & Northwestern Ry. Co. v. Evershed, 3 Appeal Cases, Law Reports, 1038:

"If equality of charges is to be disregarded under any circumstances, that might be made a cloak for making inequalities of charge under unjustifiable circumstances. I do not know whether that was the motive and intention of the Legislature or not, and I do not inquire. What the Legislature has clearly said is that the tolls must be charged equally to all persons under the same circumstances. I think that means under similar circumstances as to the goods, not as to the person. I do not think the person comes into the question at all."

The next assignment of error raises the question of the propriety of the court's refusal of defendant's seventh point, which is:

"The plaintiff is not entitled to recover on all its shipments made in any one month or period of time because of the fact that during such time the defendant transported at a lower rate than it charged the plaintiff a portion of the shipments of some other shipper. If such lower rate was not justified, the amount which the plaintiff is entitled to recover is measured by the difference between the rate per ton which it paid on all its shipments during such period and the rate per ton which the other shipper paid on his or its whole volume of shipments during such period. As there is no evidence from which the jury can estimate the rate per ton paid on all their shipments by the shippers, a portion of whose shipments were carried at lower rates than were charged the plaintiff, there is no basis on which to estimate the amount which the plaintiff is entitled to recover, and it is only, therefore, entitled to recover nominal damages."

This point in effect requested the court to charge, as fixing the measure of recovery, not the lowest rate charged by the railroad to another shipper, but the general average paid on all shipments made by such

shipper. For instance, the railroad contends that, where another shipper's contract coal was charged a less rate than the Mining Company, the recovery was not fixed by the difference between these two rates, but the fixing rate was the average rate paid on all contract coal shipped at the lower rate and all free coal at the higher rate. We think the court was right in denying this point. Whatever may be argued in support of the equity of such a rule, the simple answer is that Congress made no such rule. The purpose of the act is clear, viz., to enforce equality of rate for like service in every case, and the mischief is done when for that service a shipper is charged more than any other shipper is charged for "any service rendered, or to be rendered, in the transportation of passengers or property." So long as it charges a lower rate for any shipment, the law is defeated, although on other shipments it may charge the proper rate.

The next assignment of error raises the question whether the plaintiff can maintain this action in view of the fact, that, with knowledge that it was being charged a higher rate for its free coal than other shippers were charged for contract coal, it nevertheless paid the freight without protest. It is now claimed that the absence of protest accompanying payment of freight is fatal to the right of action. We are of opinion such is not the case. This is not the ordinary case of a suit to recover back a sum of money which has been mistakenly paid and received, but is one where a statute has stamped the receipt of the money as unlawful. Thus section 2 provides:

"Such common carrier shall be deemed guilty of unjust discrimination, which is hereby prohibited and declared to be unlawful"

—and creates a statutory right of recovery, not of the freight paid, but of damages, viz.:

"Such common carrier shall be liable to the person or persons injured thereby for the full amount of damages sustained in consequence of any such violation of the provisions of this act."

From this it is clear that, Congress having conferred a statutory right of action, and having imposed a liability to action by section 8 on the carrier, who shall "do, or cause to be done, or permit to be done any act, matter or thing in this act prohibited or declared to be unlawful," and, we may add, having conferred such right of action without imposing the precedent condition of protest, it follows that the courts cannot by construction impose on the statutory right a condition which Congress has not imposed. It follows, therefore, that this assignment cannot be sustained. This is in harmony with the holding of the Supreme Court in United States Bank v. Bank of Washington, 6 Pet. 17, 8 L. Ed. 299, where it was said:

"Where money is wrongfully and illegally exacted, it is received without any legal right or authority to receive it; and the law, at the very time of payment, creates the obligation to refund it. A notice of intention to recover back the money does not, even in such cases, create the right to recover it back. That results from the illegal exaction of it; and the notice may serve to rebut the inference that it was a voluntary payment, or made through mistake."

The next question raised is that the court erred in refusing to admit in evidence an exemplification of a record of the state court in the

case of Cresson & Clearfield Coal & Coke Company v. International Coal Mining Co., for the purpose of showing a judicial sale of the International Coal Mining Company's claim or chose in action which is the subject-matter of the present suit. We see no reversible error in such ruling by the court. Whatever might be the effect of such judicial sale, the refusal of the court to admit it as a matter of evidence at the trial was not improper. When this suit was brought the right of action was clearly in the International Coal Mining Company, then and now the legal plaintiff. It is alleged such right of action was, after action brought, sold from it by judicial sale. But, waiving the question whether this sale, which was made on a lien obtained within four months prior to bankruptcy, is not void under the law, it is clear the sale would not abate the action. Thatcher v. Rockwell, 105 U. S. 467, 26 L. Ed. 949; Eyster v. Gaff, 91 U. S. 521, 23 L. Ed. 403. No contention is now made that the right of action did not pass to the trustee, if it was not previously divested by the alleged judicial sale. When a plaintiff in a pending action becomes bankrupt, such action is not thereby abated (Hahlo v. Cole, 15 Am. Bankr. Rep. 591, 112 App. Div. 639, 98 N. Y. Supp. 1049), for section 11 of the act (Acts July 1, 1898, c. 541, 30 Stat. 549 [U. S. Comp. St. 1901, p. 3426]) provides:

"A trustee may, with the approval of the court, be permitted to prosecute as trustee any suit commenced by the bankrupt prior to the adjudication, with like force and effect as though it had been commenced by him."

Accordingly the trustee in this bankruptcy was here made use plaintiff and the action proceeded. Now it seems at some prior stage the defendant sought to abate the action by virtue of this judicial sale, but the court had not sustained such effort. However that may be, we have in the assignment of error now before us the simple offer of the exemplification in evidence. In that forum the question was simply a contest of use plaintiffs, and the defendant had no legal right to interject that question into the trial. If admitted, so far as anything disclosed in the offer on which the assignment is based is concerned, it could not have affected the defendant. Consequently its rejection constitutes no reversible error.

It remains to consider the assignments of error raised by the Mining Company on the writ it has taken to review this judgment. Theoretically it may have a right to have these questions reviewed, but that it has no practical administrative end in view is apparent from the fact that on the other branch of the case it is strenuously insisting on the affirmance of the same judgment it here academically, but not really, asks to have reversed. With this in view, it suffices, without an extended discussion, to say we have examined the assignments involved and find no error. For example, it is here sought to convict the court below of error in overruling challenges of the plaintiff to certain jurors. In view of the fact that the jury awarded the plaintiff the full amount of its claim on the evidence before it, and that the plaintiff is insisting on sustaining the judgment on such verdict, it is clear the court's ruling did the plaintiff no harm, and the assignment is void of merit.

It is further contended that there was error in the court's refusing to enter judgment for default of defendant in not producing papers

in obedience to order. The court below was satisfied with the production made, and we find nothing in the record to satisfy us that the court did not understand its own order, or was mistaken in holding it was complied with.

Another assignment involves the right of the plaintiff to recover damages on shipments of coal made before April 1, 1899. In that respect the court ruled that, while there was evidence the Railroad had carried coal for others prior to that date for less than its published rates, the plaintiff itself had received the benefit of such lower rates in common with other shippers, and there was no discrimination against it. We think the court properly disposed of this aspect of the case in its charge, when it said:

"Up until July 1st, if all the evidence is to be believed, the plaintiff, its competitors, and the defendant were all engaged in violating the law—the railroad in giving rebates unlawfully, and the plaintiff in soliciting and accepting the same rebates that its competitors solicited and accepted; and under those circumstances courts do not sit to measure the difference in degree of violation of the law in favor of one party or the other. The question of the money value that each of them received in their violation of the law will not be looked into, nor taken up, nor investigated by courts of justice. Courts of justice are not instituted to measure difference in money value to two people who are engaged in violation of the same law, and therefore the court will not permit them to recover, not for the purpose of relieving the defendant, but because the plaintiff is just as culpable, and under this law, if any criminality attaches, has been just as much a violator of the law, as the defendant. That is the reason I say they cannot recover up to that time."

The next question raised involved the court's restricting plaintiff's right to recover to a sum measured by the difference between the rates charged it and other shippers, and declining to consider alleged advantages enjoyed by the Berwind-White Company in reference to a lease of Harrison's pier, allowance for handling coal there, and on the Altoona Coal & Coke Company, a short connecting line. It suffices to say no such ground of action was declared on, and the court was justified in the exclusion of such features from the jury.

Indeed, after due consideration of these and the other assignments, which we do not deem it necessary to discuss in detail, we find no error by the court below; and its judgment is therefore affirmed, each party to pay costs on its own writ of error.

(173 Fed. 65.)

WINFREE v. NORTHERN PAC. RY. CO.

(Circuit Court of Appeals. Ninth Circuit. October 4, 1909.)

No. 1,663.

1. MASTER AND SERVANT (§ 87*)—DEATH OF SERVANT—EMPLOYERS' LIABILITY ACT—OPERATION.

The employer's liability act (Act Cong. April 22, 1908, 35 Stat. 65, c. 149) is not retroactive, and does not authorize an action for the wrongful death by the administrator of an employé engaged in interstate commerce against his master occurring prior to the time the act took effect.

[Ed. Note.—For other cases, see Master and Servant, Cent. Dig. § 138; Dec. Dig. § 87.*]

2. DEATH (§ 31*)—WRONGFUL DEATH—RIGHT TO SUE.

Ballinger's Ann. Codes & St. Wash. § 4829 (Pierce's Code, § 257), gives the right of action for wrongful death of an unemancipated minor to recover loss of earnings during his minority to the father, or, in case of his death or desertion of his family, to the mother, and not to the minor's personal representative.

[Ed. Note.—For other cases, see Death, Cent. Dig. §§ 35-46; Dec. Dig. § 31.*]

3. DEATH (§ 39*)—DEATH OF SERVANT—STATUTES—LIMITATION.

Act Cong. June 11, 1906, c. 3073, § 1, 34 Stat. 232 (U. S. Comp. St. Supp. 1907, p. 891), giving the right of action for the wrongful death of an employé engaged in interstate commerce to decedent's personal representative, limits such right of action to one year from the date of the injury complained of.

[Ed. Note.—For other cases, see Death, Cent. Dig. § 54; Dec. Dig. § 39.*]

In Error to the Circuit Court of the United States for the Eastern Division of the Eastern District of Washington.

Action by William H. Winfree, as administrator of the estate of Albert E. Phipps, against the Northern Pacific Railway Company. A demurrer was sustained to plaintiff's complaint (164 Fed. 698), and he brings error. Affirmed.

B. C. Mosby, for plaintiff in error.

Edward J. Cannon, for defendant in error.

Before GILBERT and ROSS, Circuit Judges, and HUNT, District Judge.

GILBERT, Circuit Judge. The plaintiff in error, as administrator of the estate of Albert E. Phipps, deceased, brought an action to recover damages from defendant in error, and in his complaint alleged that the said Albert E. Phipps, a minor of the age of 18 years and 5 months, while acting as a fireman upon a freight locomotive of the defendant in error in the state of Washington, met his death through the negligence of his employer; that the defendant in error was engaged in interstate commerce; that the decedent had not been emancipated, nor had his parents any knowledge of his employment; that they lived in the state of Wyoming; and that the action was brought for their benefit under the provisions of the act of Congress approved April 22, 1908 (35 Stat. 65, c. 149), an act relating to the liability of common carriers by railroad to their employés in certain cases. The

complaint set forth the particulars in which it was alleged that the defendant in error was negligent, and alleged that the decedent had no previous experience as fireman, and, by reason of his youth and inexperience, did not appreciate, and hence did not assume, the risks, hazards, and perils of the work assigned to him, and that the accident occurred without fault on his part. The defendant in error demurred to the complaint, and the demurrer was sustained on the ground that the act of Congress so referred to has no retroactive application. The plaintiff in error pleading no further, judgment was entered against him.

The sufficiency of the complaint is the sole question which is presented for our determination. The plaintiff in error contends that the act of 1908, being a remedial measure, should be construed as retroactive, unless such a construction is precluded by its terms. It is not necessary to cite authorities to the well-settled rule that a statute will not be given a retroactive effect by construction unless the Legislature has so explicitly expressed its intention to make it retroactive as to leave no reasonable doubt thereof. In the act in question (35 Stat. 65) it is provided that every common carrier engaged in interstate commerce shall be liable in damages for injury or death resulting in whole or in part from the negligence of any of the officers, agents, or employés of the carrier. There is nothing in the terms of the act to show that it was the intention of Congress to affect rights of parties as to any injury or death that had occurred before it went into effect. It is not to be presumed that Congress intended to impose civil liability upon carriers founded upon transactions which at the time of their occurrence gave no rise to a legal demand against them. In Twenty Per Cent. Cases, 20 Wall. 179, 187, 22 L. Ed. 339, the court said:

"Courts of justice agree that no statute, however positive in its terms, is to be construed as designed to interfere with existing contracts, rights of action, or with vested rights, unless the intention that it shall so operate is expressly declared or is to be necessarily implied, and, pursuant to that rule, courts will apply new statutes only to future cases unless there is something in the nature of the case or in the language of the new provision which shows that they were intended to have a retroactive action."

The statute in question, while it is remedial in the sense that it affects the remedy in accident cases, is not of the nature of those remedial statutes which have received a liberal and expansive application at the hands of the courts, such as statutes intended to remedy a mischief, to promote public justice, to correct innocent mistakes, to cure irregularities in judicial proceedings, or to give effect to the acts and contracts of individuals according to the intent thereof. It is a statute which permits recovery, in cases where recovery could not be had before, and takes from the defendant defenses which formerly were available, defenses which in this instance existed at the time when the contract of service was entered into and at the time when the accident occurred. In Society, etc., v. Wheeler et al., 2 Gall. 104–139, Fed. Cas. No. 13,156, Judge Story said:

"Upon principle every statute which takes away or impairs vested rights acquired under existing laws, or creates a new obligation, imposes a new

duty, or attaches a new disability in respect to transactions or considerations already past, must be deemed retrospective; and this doctrine seems fully supported by authorities."

Tested by these principles it seems clear that the act of 1908 is in none of its features retroactive.

But the plaintiff in error contends that, irrespective of the statute, the complaint states a common-law cause of action against the defendant in error upon the distinct charges of negligence which are therein set forth. In answer to this it is sufficient to point to the fact that the complaint in this case is brought to recover the damages that resulted to the parents of the decedent from the loss of his earnings during his minority, and that the statute of Washington (section 4829, Ballinger's Ann. Codes & St. [Pierce's Code, § 257]) gives the right of action in such a case to the father, or, in the case of his death or his desertion of his family, to the mother, and for injury or death of a ward, to his guardian, and that by the laws of that state, no such right of action accrues to a personal representative. Atrops v. Costello, 8 Wash. 149, 35 Pac. 620; Noble v. Seattle, 19 Wash. 133, 52 Pac. 1013, 40 L. R. A. 822; Manning v. Tacoma R. & P. Co., 34 Wash. 406, 75 Pac. 994. It is true that by Act Cong. June 11, 1906, c. 3073, 34 Stat. 232 (U. S. Comp. St. Supp. 1907, p. 891), a right of action was given to the personal representative in a case of this nature, and that law was in force at the time of the death of the decedent, but it cannot be said that this action is brought under its sanction, because all actions thereunder were required to be brought within one year from the date of the injury complained of.

The judgment is affirmed.

(173 Fed. 882.)

MOUND MINES CO. v. HAWTHORNE et al.

(Circuit Court of Appeals, Eighth Circuit. September Term, 1909.)

No. 3,084.

1. BANKRUPTCY (§ 116*) — JURISDICTION OF COURTS — SUMMARY PROCEEDINGS AGAINST ADVERSE CLAIMANTS.

Where a third party claims an interest in property which was in the possession of a bankrupt at the time of the bankruptcy and passed into that of his trustee, the referee may by a summary proceeding require such third party to appear in the bankruptcy court and present his claim, and may adjudicate the rights of the parties in respect thereof.

[Ed. Note.—For other cases, see Bankruptcy, Dec. Dig. § 116.*

Jurisdiction of federal courts in suits relating to bankruptcy, see note to Bailey v. Mosher, 11 C. C. A. 313.]

2. BANKRUPTCY (§ 440*)—APPELLATE PROCEEDINGS—MATTERS REVIEWABLE BY APPEAL.

A decree of a District Court in bankruptcy, summarily adjudicating the right to property in the possession of a trustee as between him and an adverse claimant, is reviewable by appeal.

[Ed. Note.—For other cases, see Bankruptcy, Dec. Dig. § 440.*

Appeal and review in bankruptcy cases, see note to In re Eggert, 43 C. C. A. 9.]

3. VENDOR AND PURCHASER (§ 3*)—SPECIFIC PERFORMANCE (§ 99*)—CONTRACTS ENFORCEABLE—CONTRACTS FOR SALE OF REAL PROPERTY.

A contract by which one party agrees to sell and convey real estate on payment therefor at a stated time, and the other agrees to make such pay-

ment, although it also provides that if payment is not made at the time stipulated the purchaser shall forfeit all right and the seller be released from all obligation to convey, is not one giving an option, but one of bargain and sale; and where the purchaser has gone into possession and made valuable improvements on the property, a court of equity will decree a specific performance in his favor, notwithstanding his default in payment at the time promised, when there has been no change of circumstances or conditions to defeat his equity.

[Ed. Note.—For other cases, see Vendor and Purchaser, Cent. Dig. § 3; Dec. Dig. § 3;* Specific Performance, Cent. Dig. § 301; Dec. Dig. § 99.*]

4. CONTRACTS (§ 211*)—EFFECT OF DEFAULT OF PLAINTIFF—WAIVER.

Although time is made an essential element of a contract by express stipulation, the party who is entitled to insist on a punctual performance by the other, or else that the agreement be ended, may waive his right and the benefit of any objection he might raise to a performance after the prescribed term, either expressly or by his conduct, and his conduct will operate as a waiver when it is consistent only with a purpose on his part to regard the contract as still subsisting after the other party's default.

[Ed. Note.—For other cases, see Contracts, Cent. Dig. §§ 938–943; Dec. Dig. § 211.*]

Appeal from the District Court of the United States for the District of Colorado.

Proceeding by Silas T. Hawthorne, trustee in bankruptcy of the Griffith Mines Company, against the Mound Mines Company. From the decree, the Mound Mines Company appeals; one Robert W. Hanington intervening as appellee. Affirmed.

J. E. Robinson, for appellant.

Daniel B. Ellis (Henry T. Rogers, Lewis B. Johnson, Pierpont Fuller, and George A. H. Fraser, on the brief), for appellee Hawthorne.

Ernest Morris (William W. Grant, Jr., on the brief), for appellee Hanington.

Before SANBORN and VAN DEVANTER, Circuit Judges, and WM. H. MUNGER, District Judge.

WM. H. MUNGER, District Judge. On August 11, 1906, Mary L. Fletcher, being the owner of the real estate in controversy in this action, on that day entered into an agreement in writing to sell to the Griffith Mines Company, a corporation organized under the laws of Colorado, the said real estate, which agreement contained, among other things, the following provisions:

"That the said party of the first part, for and in consideration of the covenants and agreements on the part of the said party of the second part hereinafter contained, and the payment to her by the said party of the second part of the sum of one dollar, the receipt of which is hereby acknowledged, agrees to sell and convey unto the said party of the second part, and said second party agrees to buy, all those certain lots and parcels of lands, * * * for the sum of five hundred ($500.00) dollars cash, and the said party of the second part, in consideration of the premises, agrees to pay said party of the first part the said sum of five hundred ($500.00) dollars in cash, for the above-described premises, six months from date hereof; the date of said payment being the 11th day of February, A. D. 1907. In the event of a failure to comply with the terms hereof by the said party of the second part, the said party

of the first part shall be released from all obligations in law or equity to convey said property, and the said party of the second part shall forfeit all right thereto. * * * It is understood and agreed by the parties hereto that the stipulations aforesaid are to apply to and bind the heirs, executors, administrators, and assigns of the party of the second part, and that the said party of the second part is to have immediate possession of the said premises."

Immediately after the execution and delivery of said agreement the said second party, the Griffith Mines Company, entered into possession of the real estate and constructed thereon valuable improvements, consisting of a concentrating mill, at a cost of approximately $15,000. The mill was not completed until about March 30, 1907. One W. D. Hoover was, at the time of the execution of the sale agreement aforesaid, president of the Griffith Mines Company, and continued as such up to the time of the instituting of this action. The Griffith Mines Company did not, on the 11th day of February, 1907, pay to Mrs. Fletcher the said $500, nor at any time since; nor did Mrs. Fletcher, in February, 1907, or at any time thereafter, make demand for the payment of said sum, or do any act indicating a forfeiture of the contract. On the other hand, her conduct and action thereafter, until in January, 1909, when she conveyed the premises by deed to appellant, indicated that she regarded said agreement of sale as still of binding force. In February, 1908, the Griffith Mines Company endeavored to negotiate a sale of the premises to the Mountain Mining Company, and for that purpose executed a conveyance to the Mountain Mining Company of the property in question and deposited such conveyance in escrow with the State Street Trust Company of Boston, Mass., to be delivered on or before April 1, 1908, upon the Mountain Mining Company performing certain conditions described in the escrow agreement. At the request of Mr. Hoover, president of the Griffith Mines Company, Mrs. Fletcher executed her deed to the premises in question to the Griffith Mines Company, which she forwarded to said State Street Trust Company, with a letter under date of February 21, 1908, in which she stated:

"Gentlemen: I herewith hand you, for the purpose of holding in escrow, under the terms of the escrow agreement between you and the Griffith Mines Company, my warranty deed to the Griffith Mines Company for the following described real estate: [Describing the same property mentioned in the sale agreement.] This deed to be delivered by you to William Tudor and Whitcomb, Reed & Co. for the Mountain Mining Company when the sum of $500 is received by you in payment therefor; and you are instructed to send to me the said $500 upon receipt thereof."

Upon the trial of this case Mrs. Fletcher was called as a witness, and among other things testified as follows:

"Q. You knew that a mill had been built upon the lots, did you? A. After it was built; yes. Q. Did you understand that that made you perfectly secure so far as your $500 was concerned? A. I hoped it did. Q. Mrs. Fletcher, is it or is it not a fact that you were ready and willing at all times to convey this property to the Griffith Mines Company upon payment to you of the $500? A. Well, it was insomuch as Mr. Hoover was concerned in it. I always regarded it as a personal matter with Mr. Hoover. Q. You would, at any time that he might have requested it, have conveyed the property to the Griffith Mines Company upon the payment to you of the $500, without regard to any limitations fixed in any option agreement or escrow agreement? A. Yes, sir."

The whole tenor of the testimony goes to show that, because of the personal friendship existing between Mrs. Fletcher and Mr. Hoover, she would make a conveyance at any time that he might request. On October 23, 1908, a petition in bankruptcy was filed against the Griffith Mines Company, and on November 18th it was adjudged a bankruot. Appellee Hawthorne was appointed by the court receiver of the bankrupt estate and afterwards duly elected trustee, and in both capacities took and held possession of the premises in controversy. From the time of the execution and delivery of the agreement of sale up to the time that the receiver in bankruptcy took possession of the premises, the same were in the possession of the Griffith Mines Company, the bankrupt. After the proceedings in bankruptcy were instituted, the Mound Mines Company, appellant, was organized and incorporated under the laws of the state of Ohio. In the expectation that it would be a purchaser of the bankrupt's estate at a sale thereof, it obtained, in January, 1909, from Mrs. Fletcher, a deed to the premises in question, paying her therefor $500; she making the deed at the instance of Mr. Hoover, who was a creditor of the Griffith Mines Company and expected to receive his pay as such creditor through said Mound Mines Company.

Upon proper application by the trustee, he was authorized to sell the property of bankrupt, including the property in controversy; the portion in controversy in this action being purchased by Robert W. Hanington, who has been permitted to intervene as appellee. After the sale to Mr. Hanington, he objected to the confirmation, for the reason that the conveyance by Mrs. Fletcher to the Mound Mines Company constituted at least a cloud upon the title. Thereupon the trustee filed his petition before the referee, setting forth the essential facts, and asking that the Mound Mines Company be required to convey said property to petitioner, upon payment of the sum of $500. An order to show cause was duly issued and served upon the Mound Mines Company, which appeared at the time stated before the referee and interposed objections on the ground that the court had no jurisdiction to determine the rights of the parties in a summary proceeding, and that the rights of the parties could only be determined by a plenary action for that purpose. The case proceeded to hearing, the objection of appellant to the jurisdiction was overruled, and an order made by the referee that said Mound Mines Company convey said premises to the trustee upon payment to it of the sum of $500, to which order of the referee appellant filed its petition for review by the District Court, and upon a hearing the finding and order of the referee was affirmed. From the decree of the District Court appellant has prosecuted its appeal to this court. Appellant here insists that the referee had no jurisdiction by summary proceeding to determine the matter in controversy.

The law is now settled that the interest of a third party in property claimed to belong to the bankrupt estate, which, at the time of the institution of the proceedings in bankruptcy, is in the possession of such third person, claiming an interest therein, can only be determined by an original suit brought for that purpose. Where, however, property

which is in the possession of a bankrupt at the time of the bankrupt proceedings, and passes as part of his estate into the possession of the trustee in bankruptcy, and a third party claims an interest therein, the referee may, by a summary proceeding, require such third party to appear in the bankrupt court, present his claim, and the referee adjudicate the rights of the parties in respect thereof. Mueller v. Nugent, 184 U. S. 1, 22 Sup. Ct. 269, 46 L. Ed. 405; In re Rochford et al., 124 Fed. 182, 59 C. C. A. 388; In re Schermerhorn, 145 Fed. 341, 76 C. C. A. 215; In re Eppstein, 156 Fed. 42, 84 C. C. A. 208, 17 L. R. A. (N. S.) 465; In re Kellogg, 121 Fed. 333, 57 C. C. A. 547; In re Noel (D. C.) 137 Fed. 694; Plaut v. Graham Mfg. Co. (D. C.) 159 Fed. 754. The referee, therefore, had jurisdiction.

Appellee Hanington now urges that this court is without jurisdiction to review the decree of the District Court in a proceeding by appeal. That appeal is the proper proceeding in such a case was held by the Supreme Court in Hewitt v. Berlin Machine Works, 194 U. S. 296, 24 Sup. Ct. 690, 48 L. Ed. 986, by this court in Dodge v. Norlin, 133 Fed. 363, 66 C. C. A. 425, and John Deere Plow Co. v. McDavid, 137 Fed. 802–810, 70 C. C. A. 422, and was also held in Franklin v. Stoughton Wagon Co., 168 Fed. 857, 94 C. C. A. 269.

Proceeding, then, to the merits of the case, it is urged, on the part of appellant, that the contract of sale in question cannot now be enforced, as the provision therein, providing "that in the event of a failure to comply with the terms thereof by the said party of the second part the said party of the first part shall be released from all obligations in law or equity to convey said property, and the said party of the second part shall forfeit all right thereto," operated to divest the Griffith Mines Company of all title or interest in and to the property, upon its failure to make the payment February 11, 1907, as provided in the agreement. The question has been discussed by counsel upon the theory that the agreement was an optional contract only. We regard the contract, not as an optional one, but a contract of bargain and sale. By its terms Mrs. Fletcher agreed to sell and convey, and the Griffith Mines Company agreed to pay to Mrs. Fletcher the sum of $500 in cash for, the premises on the date named. This was a binding agreement upon both parties. Not only was the Griffith Mines Company entitled to enforce its performance upon tender of the sum named at the time named, but Mrs. Fletcher could, upon failure of the company to make the payment at the time named, have maintained an action for the purchase price.

While it is competent and legal for parties to a contract to stipulate that time shall be of the essence of the contract, and provide for forfeiture in case the terms of the contract are not complied with, yet a court of equity will determine and decree the rights of the parties in accordance as equity and justice may require. In Pomeroy's Equity Jurisprudence, vol. 6, § 816, it is said:

"Contracts often contain a clause that, if payment is not made at the day, the defaulting vendee shall forfeit all payments previously made and lose his right to the land. The courts of equity in England and most American jurisdictions deal with such a forfeiture clause on the principle that equity abhors a forfeiture, and will relieve from it. It will, if possible, consider the clause

as a stipulation for security of performance, and not as intending a great loss to one party by a slight failure to perform, and will decree a performance against the vendor, with compensation for delay by payment of interest on the purchase money, thus relieving against the forfeiture."

In Cheney v. Libby, 134 U. S. 68, 78, 10 Sup. Ct. 498, 502, 33 L. Ed. 818, it is said:

"Even where time is made material, by express stipulation, the failure of one of the parties to perform a condition within the particular time limited will not in every case defeat his right to specific performance, if the condition be subsequently performed without unreasonable delay, and no circumstances have intervened that would render it unjust or inequitable to give such relief. The discretion which a court of equity has to grant or refuse specific performance, and which is always exercised with reference to the circumstances of the particular case before it (Hennessey v. Woolworth, 128 U. S. 438, 442, 9 Sup. Ct. 100, 32 L. Ed. 500), may, and of necessity must, often be controlled by the conduct of the party who bases his refusal to perform the contract upon the failure of the other party to strictly comply with its conditions."

While courts of equity are loth to and will not ordinarily aid a party who is guilty of laches in performing, yet where a party has gone into possession of real estate, made valuable and lasting improvements thereon, and his only breach of the covenant is that of time of payment, and the grantor has only sustained the loss resulting from being kept out of his money, which loss can be compensated by interest, equity under such circumstances usually grants relief to complainant, notwithstanding he is himself in default.

There is, however, another ground which is decisive of appellant's contention; that is, that Mrs. Fletcher, by her acts and conduct, waived the forfeiture and acted upon the theory that the contract was still a subsisting one. Though, by agreement, parties to a contract may make time the essence thereof, and provide that the party in default shall forfeit all rights thereunder, yet it is well established that the party in whose favor the quality exists may either expressly or by conduct waive such provision. In Pomeroy on Contracts (2d Ed.) § 394, it is said:

"Wherever time is made essential, either by the nature of the subject-matter and object of the agreement, or by express stipulation, or by a subsequent notice given by one of the parties to the other, the party in whose favor this quality exists—that is, the party who is entitled to insist upon a punctual performance by the other, or else that the agreement be ended—may waive his right and the benefit of any objection which he might raise to a performance after the prescribed time, either expressly or by his conduct, and his conduct will operate as a waiver when it is consistent only with a purpose on his part to regard the contract as still subsisting and not ended by the other party's default."

The same rule is announced in Jones on Real Property, vol. 1, § 699; Raymond v. San Gabriel Valley Land & Water Co., 53 Fed. 883, 4 C. C. A. 89 (8th Circuit); Thayer v. Star Mining Co., 105 Ill. 540; Phillips v. Carver, 99 Wis. 561, 75 N. W. 432; Robinson v. Trufant, 97 Mich. 410, 56 N. W. 769; Blair v. Blair et al., 48 Iowa, 393.

It being clear from the evidence that Mrs. Fletcher waived her right of forfeiture, the bankrupt having expended a large amount of money in permanent improvements thereon, which would be lost to the bank-

rupt estate if the relief asked was not granted, and it being apparent that appellant, who has acquired the interest of Mrs. Fletcher, can be fully compensated for all loss by the payment of interest, the decree of the court below was in substantial harmony with the equitable rights of the parties. As the decree, however, did not provide for the payment of interest upon the $500, it will be modified, so as to require the trustee to pay the sum of $500, with legal interest thereon from the 11th day of February, 1907.

In all other respects the decree is affirmed.

(173 Fed. 888.)

MECHANICS' INS. CO. OF PHILADELPHIA et al. v. C. A. HOOVER DISTILLING CO. et al.

(Circuit Court of Appeals, Eighth Circuit. September 9, 1909.)

No. 3,040.

1. INJUNCTION (§ 26*)—ACTIONS ON INSURANCE POLICIES—EQUITABLE JURISDICTION.

The fact that the several policies of insurance on property destroyed by fire each contained a clause providing that the insurer should not be liable thereunder for a greater proportion of any loss than the amount of such policy bore to the total amount of valid insurance on the property does not give a court of equity jurisdiction of a joint bill by the insurers to enjoin the insured from maintaining actions at law on the policies, and to draw to itself the adjudication of the rights of the parties on the ground that the policies are interdependent contracts and that an accounting is necessary; neither one of complainants having in fact any interest in the amount of recovery from any other.

[Ed. Note.—For other cases, see Injunction, Cent. Dig. §§ 28-49; Dec. Dig. § 26.*]

2. EQUITY (§ 51*)—JURISDICTION—PREVENTING MULTIPLICITY OF SUITS.

Complainants cannot join in invoking the jurisdiction of a court of equity, on the ground that it will prevent a multiplicity of suits, because defendant has brought similar actions at law against each of complainants on a separate cause of action, and where complainants separately have no cause of action against defendant, either legal or equitable.

[Ed. Note.—For other cases, see Equity, Cent. Dig. §§ 167-171; Dec. Dig. § 51.*]

3. INSURANCE (§ 608*)—ACTIONS ON POLICIES—EQUITY JURISDICTION.

An averment by insurers that an insured made excessive and fraudulent claims of loss under policies may be tried and determined in actions at law on the policies, and is no ground of equitable jurisdiction.

[Ed. Note.—For other cases, see Insurance, Cent. Dig. § 1517; Dec. Dig. § 608.*]

Appeal from the Circuit Court of the United States for the Southern District of Iowa.

Suit in equity by the Mechanics' Insurance Company of Philadelphia and others against the C. A. Hoover Distilling Company and others. From a decree dismissing the bill, complainants appeal. Affirmed.

Charles B. Obermeyer (A. C. Parker, N. T. Guernsey, and W. E. Miller, on the brief), for appellants.

James A. Devitt and John F. Lacey (W. R. Lacey, W. C. Burrell, and William McNett on the brief), for appellee Hoover Distilling Co.

H. H. Sheriff, for appellees Insurance Companies.

Before SANBORN, Circuit Judge, and CARLAND and POLLOCK, District Judges.

CARLAND, District Judge. The C. A. Hoover Distilling Company, an Iowa corporation doing business at Oskaloosa, in said state, on May 15, 1908, suffered a loss of property by fire. On the property destroyed were insurance policies to the amount of $85,500, distributed among different insurance companies as follows:

No. of Policy.	Name of Company.	Amount of Policy.
608206	Mechanics' Insurance Company of Philadelphia	$3,000 00
2833	The Home Insurance Company of New York	5,000 00
2309	" " " " " " "	5,000 00
25069	Buffalo German Insurance Company of Buffalo	2,000 00
1272	St. Paul Fire & Marine Insurance Company of St. Paul	5,000 00
2505	Phenix Insurance Company of Brooklyn, N. Y.	3,000 00
2551	" " " " " " "	3,000 00
104	Royal Insurance Company of Liverpool	5,000 00
1390	German American Insurance Company of N. Y.	5,000 00
1378	" " " " " " "	2,500 00
1557	The Insurance Company of North America of Philadelphia	4,000 00
5237659	North British & Mercantile Insurance Company of London and Edinburgh	3,000 00
5239476	North British & Mercantile Insurance Company of London and Edinburgh	2,500 00
1243	The Rochester German Insurance Company of Rochester	1,500 00
51604	" " " " " " "	3,000 00
62049	The Phoenix Insurance Company of Hartford, Conn.	3,000 00
62052	" " " " " " "	2,000 00
3885018	Fire Association of Philadelphia	2,500 00
3885038	" " " "	4,000 00
5004	City of New York Insurance Company of New York	3,000 00
22087	Security Insurance Company New Haven, Conn.	2,500 00
2360	Ætna Insurance Company of Hartford	3,000 00
2383	" " " " "	2,500 00
26105	Milwaukee Mechanics' Insurance of Milwaukee	2,000 00
52501	Milwaukee Fire Insurance Company of Milwaukee	1,500 00
1675	Commercial Insurance Company of Buffalo, N. Y.	2,000 00
2900150	The London Assurance Corporation, United States Branch, New York City	5,000 00

On August 25th the Distilling Company commenced actions at law in the district court of Iowa, in and for Mahaska county, against each of said insurance companies to recover the loss caused by said fire. Subsequently the defendants in each of said actions at law, where the amount in controversy was sufficient, removed said actions to the United States Circuit Court for the Southern District of Iowa. The removal proceedings brought 15 actions to the United States Circuit Court and left 4 actions pending in the state district court. October 15, 1908, the 15 insurance companies which had removed the cases against them filed a bill in equity in said United States Circuit Court against the Distilling Company and the four insurance companies who did not remove their cases from the state court, wherein complainants prayed that the Distilling Company be enjoined from prosecuting

any of said actions at law either in the state or federal court; that the court ascertain what, if any, sum is due from any of the insurance companies to the Distilling Company on the policies of insurance issued by them; and that it be decreed accordingly, but, if no sum should be found due, that said policies be decreed to be delivered up and canceled. The bill stated the foregoing facts, and also alleged that each of the policies issued to the Distilling Company by the insurance companies contained the following provision:

"This company shall not be liable under this policy for a greater proportion of any loss on the described property, or for loss by and expense of removal from premises endangered by fire, than the amount hereby insured shall bear to the whole amount of valid and collectible insurance covering such property."

The Distilling Company demurred to the bill for want of equity, and for the reason that complainants had an adequate remedy at law. The Circuit Court sustained the demurrer and dismissed the bill, but continued a temporary injunction pending an appeal to this court. There are many legal conclusions and matters of argument stated in the bill, but the facts upon which the jurisdiction of the United States Circuit Court as a court of equity must depend have all been stated. If the bill in this case states a cause of action cognizable in equity, it is plain that the days of jury trial in insurance litigation are numbered, as there are extremely few insurance losses not covered by at least two or more policies in different insurance companies. In view of the great number of actions to recover losses upon policies of insurance heretofore triable at law, any decision which would strike down this jurisdiction and transfer the whole litigation to courts of equity ought to be founded upon the soundest reason and declared only after careful consideration.

If we understand counsel for complainants their position is this: First. As each insurance company agrees to pay such a proportion of the total loss as the amount of its policy bears to the total amount of valid insurance on the property damaged or destroyed, the insurance policies become interdependent contracts, necessitating an accounting, so to speak, between the insurers and insured, in order to ascertain the amount due on each policy. Second. That by all insurance companies joining in the bill as complainants a multiplicity of suits will be saved.

In order to fully appreciate the position of complainants in the present action, it will be helpful to view their position standing alone. Thus viewed, each insurance company has a valid contract or contracts with the Distilling Company, upon each of which, according to the allegations of the bill, the Distilling Company may maintain an action at law for damages against each insurance company. There are no facts stated in the bill that show that any insurance company, standing alone, has any cause of action whatever, either legal or equitable, against the Distilling Company. The different insurance companies having no cause of action individually, so far as appears, against the Distilling Company, we are led next to inquire as to what cause of action of equitable cognizance in favor of complainants and against the Distilling Company has been created by joining in the bill filed in this cause, as appears from the allegations thereof.

We think it clearly appears that complainants have no more cause of action cognizable in equity in combination than if each stood alone. The method adopted by the parties to the insurance contracts for ascertaining the amount payable thereunder in case of loss does not make the contracts interdependent. No one insurance company has any interest in what any other insurance company shall pay under its policy. It is only interested in what it shall pay, and as a consequence in the value of the property destroyed. So far as the allegations of the bill are concerned, there is not a disputed question between any of the insurers and the insured, except as to the value of the property destroyed; and it is asked that a court of equity take jurisdiction of the case for the purpose of ascertaining this value, for the reason that different juries in actions at law might return different verdicts as to the value of this property, and thus the amount to be paid by one insurance company might be greater or less than that of some other company. If the peculiar and special duty of juries to pass upon property values in matters at law may be taken away and given to a chancellor, merely because different juries may render different verdicts upon like or similar facts, then trial by jury in civil actions no longer exists. The idea of handling these cases through a master in chancery, when the only question at issue is the value of the property destroyed, because there is no adequate remedy at law, shocks the legal mind.

But it is also urged that complainants have a right to file this bill in equity in order to save a multiplicity of suits. The phrase "multiplicity of suits," in connection with the jurisdiction of courts of equity, has often been carelessly used, but, it seems, never more so than in this proceeding. Each of these complainants were sued by the Distilling Company at law. In order to save the Distilling Company from prosecuting 19 different suits at law, complainants urge that they may bring this action in equity. There are two reasons why the rule in regard to saving a multiplicity of suits as applied to matters of equity jurisdiction may not be invoked in this proceeding:

First. There can be no claim that any complainant is saved from a multiplicity of suits by the maintenance of this action in equity. The Distilling Company is not in court asking it to take jurisdiction of its suits against the insurance companies in order to save it, the Distilling Company, from a multiplicity of suits against it or by it. It does not rest with the complainants to urge as a foundation for their suit that the defendant, the Distilling Company, may thereby be saved a multiplicity of suits. Equitable Life Assurance Society of the United States, Petitioner, v. Brown, 213 U. S. 25, 29 Sup. Ct. 404, 53 L. Ed. 682.

Second. The complainants, in our opinion, present no cause of action, either legal or equitable, against the Distilling Company by the allegations of their bill. The prevention of a multiplicity of suits is not, considered by itself alone, an independent source of jurisdiction in equity, in such a sense that it can create a cause of action where none had ever existed. As is said in section 250, Pomeroy's Equity Jurisprudence:

"In other words, a court of equity cannot exercise its jurisdiction for the purpose of preventing a multiplicity of suits in cases where the plaintiff, in-

voking such jurisdiction, has not any prior existing cause of action, either equitable or legal—has not any prior existing right to some relief, either equitable or legal. The very object of preventing a multiplicity of suits assumes that there are relations between the parties out of which other litigations of some form might arise."

If we are right in saying that the complainants have no cause of action against the Distilling Company, then they have no right to ask a court of equity to save any one from a multiplicity of suits. In support of the provision that the bill in this case states a cause of action cognizable in equity, the case of Home Ins. Co. of America et al. v. Virginia-Carolina Chemical Co., 109 Fed. 681, is cited. This case was affirmed on appeal. 113 Fed. 1, 51 C. C. A. 21. The case arose in the Circuit Court for the District of South Carolina, and was followed by the same court in Rochester German Ins. Co. v. Schmidt et al. (C. C.) 126 Fed. 998, and also in Tisdale v. Ins. Co. of North America, 84 Miss. 709, 36 South. 568. We have carefully examined the opinions in those cases, and, if those opinions are to the effect that the bill in this case states a cause of action of equitable cognizance, then we must say that they are not persuasive, and are a distinct departure from what has heretofore been recognized as the law in regard to equity jurisdiction.

Without entering into a detailed discussion as to when a court of equity will or will not entertain jurisdiction of a cause, we are clearly of the opinion that the case now before us is not one of equitable cognizance. Amendments to Constitution of the United States, art. 7; Rev. St. U. S. § 723 (U. S. Comp. St. 1901, p. 583); Deweese v. Reinhard, 165 U. S. 386, 17 Sup. Ct. 340, 41 L. Ed. 757; Thomas v. Council Bluffs Canning Co., 92 Fed. 422, 34 C. C. A. 428; Scottish Union, etc., Ins. Co. v. Mohlman (C. C.) 73 Fed. 66; High on Injunctions, vol. 1 (4th Ed.) § 63a (disapproving Tisdale v. Ins. Co., 84 Miss. 709, 36 South. 568); Boise Artesian Hot & Cold Water Co. v. Boise City, 213 U. S. 276, 29 Sup. Ct. 426, 53 L. Ed. 796; Equitable Life Assurance Society v. Brown, 213 U. S. 25, 29 Sup. Ct. 404, 53 L. Ed. 682; Travelers' Association v. Gilbert, 111 Fed. 269, 49 C. C. A. 309, 55 L. R. A. 538; Youngblood v. Sexton, 32 Mich. 406, 20 Am. Rep. 654; Barnes v. City of Beloit, 19 Wis. 93; Barton v. Barbour, 104 U. S. 126, 26 L. Ed. 672; Gormley v. Clark, 134 U. S. 339, 10 Sup. Ct. 554, 33 L. Ed. 909; Scott v. Neely, 140 U. S. 106, 11 Sup. Ct. 712, 35 L. Ed. 358; Hipp v. Babin, 19 How. 271, 15 L. Ed. 633; Buzzard v. Huston, 119 U. S. 347, 7 Sup. Ct. 249, 30 L. Ed. 451; Tribette v. Illinois Central Co., 70 Miss. 182, 12 South. 32, 19 L. R. A. 660, 35 Am. St. Rep. 642; Winslow v. Jenness, 64 Mich. 84, 30 N. W. 905; Douglass v. Boardman, 113 Mich. 618, 71 N. W. 1100.

We do not wish to base our decision upon the proposition that complainants have an adequate remedy at law because the cases pending in the federal court may be consolidated for the purpose of trial. Still this may be done. Insurance Co. v. Hillmon, 145 U. S. 285, 12 Sup. Ct. 909, 36 L. Ed. 706; section 295, Rev. St. U. S. (U. S. Comp. St. 1901, p. 176). There is an allegation in the bill filed by complainants in regard to the presentation of proofs of loss by the Distilling Company in which the value of the property destroyed is fraudulently exces-

sive. This kind of fraud, if it existed, can form no basis for equitable jurisdiction, as it has nothing to do with the insurance contracts themselves; and, furthermore, such a fraud is just as easily disposed of in an action at law as in an action in equity. Equitable Life Assurance Society of the United States v. Brown, 213 U. S. 25, 29 Sup. Ct. 404, 53 L. Ed. 682.

We see no error in the ruling of the trial court upon the demurrer, and its judgment is therefore affirmed.

NOTE.—The following is the opinion of Smith McPherson, District Judge, in the court below:

SMITH McPHERSON, District Judge. This case is by a bill in equity filed by 15 fire insurance companies against the Hoover Distilling Company of Oskaloosa, Iowa, and 4 fire insurance companies. The distilling company was insured against loss by fire by the 19 companies, complainants and defendants, each issuing a separate policy, and each policy providing for concurrent insurance, and all but 6 being for an amount in excess of $2,000. All the policies were of like form, being the Iowa standard form. A recital in every of the policies contained this clause: "This company shall not be liable under this policy for a greater proportion of any loss on the described property or for loss by and expense of removal from premises endangered by fire than the amount hereby insured shall bear to the whole amount of valid and collectible insurance covering such property."

May 15, 1908, while all the policies were in force, a fire occurred, destroying the whisky in barrels and in bond, being a total loss. The companies do not expressly admit, but impliedly, certainly inferentially, admit, a liability. Actions at law, 19 in number, were brought in the Mahaska county district court. Fifteen of the cases—those against complainants herein—were removed to this court by reason of the amounts involved and diverse citizenship. The 4 cases against the companies defendants herein, either because of the small amounts involved or by reason of their being incorporated in Iowa, were not removed, and are still pending in the Iowa state court. The insured and the companies have been unable to agree as to the value of the loss, the difference being many thousands of dollars between them; this large difference arising by reason of what the distilling company had fixed for whiskies of certain age at its distillery, and the prices the insurance companies insist that such whiskies can be bought for in Peoria, Louisville, and other whisky markets. By reason of the foregoing, the 15 companies have joined in a bill to enjoin the maintenance of said action at law both in this and the 4 actions in the state court. A restraining order, as prayed, was issued on an ex parte application, and the case set down for hearing on the application for a temporary writ of injunction; and the defendant distilling company has filed a demurrer to the bill.

It follows, from the foregoing, that the sole question is: Are the foregoing matters cognizable in equity? If the pleadings admit a liability, or on the evidence a liability is established, then the next question is as to the value of the loss. When that is found by the verdict of a jury, or by the court if a jury should be waived, or by the court or a master if in equity, then what is to be ascertained? Simply add the sums for which insurance was granted by the 19 policies, and divide the value of the loss by the amount of the insurance, and multiply that quotient by the sum named in each policy. That result would be the liability of that company. Is that an accounting? It seems to me that it is not. And it seems to me scarcely possible that a jury could not readily and easily make the computation. Or, if there should be any apprehension of confusion, the court could easily submit special interrogatories to the jury, to be answered, something like these: (1) What do you find as to the value of the loss? (2) What was the total amount of insurance in force at the time of the loss? (3) What was the amount of the insurance covered by the policy issued by the ——— Company? (4) And a like interrogatory as to every of the other 18 companies.

Could not the court, upon such special verdicts, by using a simple rule of primary arithmetic, render judgments? A bookkeeper or skilled accountant

could render no service. There are no complicated mutual accounts of which equity will take cognizance. The most that can be said is that the company will be entitled to a set-off. As to that Adams' Equity (8th Ed.) p. 222, says: "But it is otherwise with respect to mere matters of set-off; for right of set-off can be effectually tried at law, and can only be transferred to chancery by some special equity." Blackstone (book 3, p. 437) says: "For want of this discovery at law, courts of equity have acquired a concurrent jurisdiction with every other court in all matters of account." But here there is no matter for discovery. There are no vouchers for examination, no balance to be found, and no account to be stated. And see Story, Equity, §§ 450–453. Pomeroy's Equity (volume 3, § 1421) states the three tests with accuracy: (1) Where each party has received and paid on account of the other. (2) Where the accounts are all on one side, attended with great complication. (3) Where a fiduciary relation exists.

Some of the cases cited by complainants' counsel will be briefly noticed. The case of Fuller v. Insurance Companies (C. C.) 36 Fed. 469, 1 L. R. A. 801, was one in which there were a number of policies, some for fire insurance and others for marine insurance. The insured asked to be relieved of a multiplicity of suits, and to have the losses of the two kinds apportioned against the various companies, and Judge Blodgett held that to make such inquiry was within the power of a court of chancery. But that is a different question than the one now being considered. Home Insurance Company v. Virginia Company (C. C.) 109 Fed. 681, affirmed in 113 Fed. 1, 51 C. C. A. 21, is not in point, as will be seen from a statement of Judge Simonton at page 688 of 109 Fed., where he says: "In order, therefore, in each case to ascertain the amount to be paid by each insurer, if liability exists, the policy must be reformed in so far as it states the value of the property insured, and then the proportion which the amount or sum each assumed bears to the entire insurance must be ascertained." In other words, because of an alleged fraud, the policy had to be reformed before making the case like the one at bar. Rochester Co. v. Schmidt (C. C.) 125 Fed. 998, shows that there were grounds of fraud which would give jurisdiction to a court of equity.

But it is said that equity will prevent a multiplicity of suits. But that proposition is to be invoked by an injured party. Here each insurance company can be compelled to defend but once, and that the insured must bring many actions is of no concern to any company as an insurer. This bill of complaint, stripped of all verbiage, shows that the insured has a contract of insurance with each company which, as alleged, has matured and is now a naked money claim. No one doubts but that, if there had been but one insurer, the action necessarily would be one at law; and there being 19 policies, issued by as many companies, does not change matters further than to give each company the right of set-off. The following cases are in point: Scottish Co. v. Mohlman Co. (C. C.) 73 Fed. 66; Thomas v. Council Bluffs Co., 92 Fed. 422, 34 C. C. A. 428; Travelers' Ass'n v. Gilbert, 111 Fed. 269, 49 C. C. A. 309, 55 L. R. A. 538; Tribette v. Railroad, 70 Miss. 182, 12 South. 32, 19 L. R. A. 660, 35 Am. St. Rep. 642.

It is said that the 4 cases still pending in the state court cannot be consolidated for trial purposes under the Iowa practice. Quite likely this is so, unless consolidated by agreement. But this court cannot enjoin those actions, for the reason that they will be attended with expense and time. That is a matter for the state court. The 15 cases in this court can be consolidated for trial purposes. Insurance Co. v. Hillmon, 145 U. S. 285, 12 Sup. Ct. 909, 36 L. Ed. 706. It is true that under that decision, and in the same case when before the Circuit Court of Appeals for this circuit later on (107 Fed. 834, 842, 46 C. C. A. 668), each party in each case will be given 3 challenges, making 45 such challenges to a side, or 90 in all. But it will not be presumed that this will be done, or if it is done, it can only subject the court to inconvenience, by reason of which this court cannot ride down the right of trial by jury.

This court, sitting in equity, cannot take jurisdiction of the subject-matter. Record entries in harmony with the foregoing will be presented for signature.

(173 Fed. 241.)

RIVERSIDE TRUST CO., Limited, v. EAST RIVERSIDE WATER CO.

(Circuit Court of Appeals, Ninth Circuit. October 4, 1909.)

No. 1,707.

WATERS AND WATER COURSES (§ 254*)—CONTRACTS FOR SALE OF WATER—CONSTRUCTION.

The owner of certain lands and water rights constructed a canal to carry the waters from his land to lower lands, and entered into contracts with the owners of such lands by which he sold and conveyed to each a certain quantity of water, measured at the canal. The contracts provided that "it is understood and agreed * * * that water as above stipulated has been actually delivered to the vendee, and that said delivery and this conveyance are accepted by vendee in full satisfaction of all obligations of vendor to vendee." All of them also provided, in effect, that "vendee hereby covenants and agrees to bear his proportionate share of taxes and all expenses of maintaining and operating said canal system and all water sources and water rights and structures that may be connected therewith." *Held*, that such contracts must be construed to require the vendor to furnish continuously the stipulated quantity of water, and the covenants of the vendees to bear a proportionate share of the expenses related to the expenses of delivery only, and did not bind them to contribute to the expense of producing the water, or procuring additional sources of supply, when by reason of drouth the original supply became inadequate to fill the contracts.

[Ed. Note.—For other cases, see Waters and Water Courses, Cent. Dig. § 311; Dec. Dig. § 254.*]

In Error to the Circuit Court of the United States for the Southern Division of the Southern District of California.

Action by the Riverside Trust Company, Limited, against the East Riverside Water Company. Judgment for defendant on demurrer, and plaintiff brings error. Affirmed.

The plaintiff in error filed a complaint containing 31 separate counts on an equal number of separate contracts to recover certain expenses incurred by it in furnishing water to the defendant in error. To review the judgment of the court below, sustaining a demurrer to the complaint and each count thereof for want of facts sufficient to constitute a cause of action, the present writ of error was sued out. The plaintiff in error, which will be designated the plaintiff in this opinion, is the successor in interest of one Matthew Gage, who, between the years 1884 and 1890, executed the 31 several contracts which are the subject of the action. Gage was the owner of certain lands and water rights, and before the contracts were made was engaged in constructing a canal to carry the waters from the lands which he owned to lower lands, to the owners of which he desired to sell water rights, together with easements in the canal for the delivery of the water. On March 11, 1890, he conveyed the canal and the sources of the water to the plaintiff, and the plaintiff took the same, subject to the terms and conditions of the said contracts, and assumed and agreed to perform Gage's obligations therein expressed. Prior to January 1, 1890, the defendant in error, herein to be designated the defendant, succeeded to all the rights so granted by Gage in the contracts above referred to. The complaint alleges that prior to January 1, 1900, the water was derived from the sources referred to in the Gage contracts, and was supplied thereunder from living and running water in a stream and from flowing artesian wells, but that thereafter, and from that date to the commencement of the action, by reason of the extreme, unusual, and extraordinarily dry seasons and lack of rainfall, and from climatic and natural causes, and without fault on the plaintiff's part, it was scarce, low, depleted, and insufficient, and much less than the usual and

ordinary supply, and much less than at the times of the execution of the respective contracts, and that many of the flowing artesian wells ceased to flow, and that all the artesian wells, by reason of such conditions, became vastly depleted, and a water famine was imminent; that it became necessary, in order to overcome the effect of said dry seasons and lack of rainfall, to construct, bore, and establish other and additional artesian and other wells to get water into said canal system and supply, and it became necessary to purchase, construct, install, operate, and maintain pumping plants to secure and raise water from wells which had ceased to flow and did not flow to the surface. It is for the amount of such expenditures, made for the purchase and installing of pumping plants and the operation and maintenance of the same, that the action was brought; the plaintiff demanding of the defendant its proportion of such expenses, which proportion the defendant had refused to pay.

The contracts are made exhibits to the complaint. In those contracts the obligations of the parties of the second part are not expressed in uniform terms. In the first three, Gage agreed to construct a canal for irrigation and domestic use from a point on the Arroyo Tequesquite to the west boundary of Carit's land according to a designated survey, or to any other point where the party of the first part shall obtain a permanent and sufficient supply of water, and deliver the same to the party of the second part at the canal upon the basis of one inch to five acres of land, to be measured under a four-inch pressure. The party of the second part agreed to pay a certain sum in gross therefor, and further covenanted as follows: "Upon completion of the canal, the repairs and all expenses shall be done by parties owning the land, with the right of water from the canal in proportion as hereinbefore mentioned, from the date that water is ready to be delivered from said canal by party of the first part."

The fourth contract in point of time, and the one which provides for the greatest supply of water, was that which was made between Gage and the Iowa Land & Improvement Company on August 27, 1885. This agreement binds Gage to construct a canal for irrigation, "said canal to be supplied with water from the springs and water rights and from the flow of artesian wells bored and to be bored" on certain designated premises, and binds him to deliver water to the party of the second part, measured at the canal under a 4-inch pressure, the canal to be of sufficient capacity to carry at least 500 inches of water. It provides that the canal may be enlarged by Gage at any time within five years for the purpose of conveying additional water; that within two years from August 1, 1886, the canal shall be cemented on the bottom and sides at Gage's expense; that all distributing ditches required for irrigating its own lands shall be built by the party of the second part. The party of the second part agreed, upon the delivery by Gage of 335 inches of water, measured August 1, 1886, at the canal, under a 4-inch pressure, for the use of its lands, to pay therefor the sum of $167,500, of which $87,500 was acknowledged to have been paid, and the remainder was to be paid upon the completion of the canal to the south line of section 5, and the delivery of the 335 inches of water under a 4-inch pressure thereof, "together with a good title, free from all incumbrance, to said water, water courses, artesian wells, springs, and water rights"; and it was provided that the canal should be held in ownership by the party of the second part in proportion as the number of inches owned by it bears to the total number of inches which should be delivered from said canal when the final developments of water should have been made by Gage. It was distinctly understood that the party of the first part reserved the right to develop and procure water in addition to the 335 inches aforesaid by means of artesian wells and otherwise, and to convey the same in said canal for the use of his own and other lands. The obligation of the party of the second part as to the payment of expenses is as follows: "From the time of delivery of said water by party of the second part, it shall bear its proportionate share of the running expenses of said canal, but not for enlarging or cementing thereof." On November 10, 1886, Gage executed a deed to the defendant, which had become the successor in interest of the Iowa Land & Improvement Company, conveying a water right in the Gage canal system in accordance with the terms of the contract. In the deed it was recited as follows: "Vendee hereby covenants and agrees to bear his proportionate

share of taxes and all expenses of maintaining and operating said canal system, and all water sources and water rights and structures that may be connected therewith, and to pay the same monthly or whenever the same shall be demanded."

The other contracts were substantially the same as the contract with the Iowa Land & Improvement Company, excepting that 13 thereof were made for the supply of water in small quantities, ranging from four-tenths of an inch to 18 inches, aggregating 94.2 inches, and bearing dates between November 10, 1886, and March 5, 1888, in which contracts the obligation of the parties of the second part to pay expenses is thus expressed: "Vendee hereby covenants and agrees to bear his proportionate share of taxes and all expenses of maintaining and operating said canal system, and all water sources and water rights and structures that may be connected therewith"—and all of them contained the following provision: "It is understood and agreed, and said understanding and agreement are indicated by the acceptance of this conveyance, that water as above stipulated has been actually delivered to vendee, and that said delivery and this conveyance are accepted by vendee in full satisfaction of all obligations of vendor to vendee, his heirs and assigns."

John G. North and William J. Hunsaker, for plaintiff in error.

Collier & Carnahan, for defendant in error.

Before GILBERT and ROSS, Circuit Judges, and HUNT, District Judge.

GILBERT, Circuit Judge (after stating the facts as above). The allegations of the complaint must be construed, and the rights of the parties as to the subject-matter of the action must be determined, in the light of the contracts which were made between Gage and the respective parties of the second part thereto. The covenants upon the part of the parties of the second part in the 13 contracts last referred to in the foregoing statement, standing by themselves, and unaffected by the other provisions of the instruments in which they are contained, might be said to be sufficiently broad and inclusive to sustain the plaintiff's causes of action thereon. But, in determining their force and effect, we must not ignore the circumstances under which the contracts were entered into, and especially the subject of the grants and the covenants on the part of the grantor. Running all through these and all the contracts, and controlling the construction of the grantee's covenants, is the fact that there is in each a conveyance by the grantor of a certain designated supply of water, and there is an acknowledgment by the grantee, indicated by his acceptance of the conveyance, that the water as stipulated therein had been actually delivered to him, and that such delivery and the conveyance are accepted by him in full satisfaction of all obligations of the grantor to him, his heirs and assigns. This indicates that the grantor had covenanted to deliver continuously to the grantee the quantity of water so granted, and the covenants so made by the grantee to pay a proportionate share of the expenses must be deemed to be covenants to pay a share of the expenses of the delivery only of that which had been granted, the actual delivery of which the grantee had acknowledged, and not a covenant to contribute to the expenses of producing that which the grantor had granted.

This construction of the covenants of the grantees is even more clearly indicated in the other contracts and conveyances between Gage and the predecessors in interest of the defendant. It was therein mu-

tually agreed that Gage should construct a canal, for the purpose of irrigation, from a designated point or from any other point where he might obtain "a permanent and sufficient supply of water"; that the canal was to be supplied with water from the springs and water rights and from the flow of artesian wells bored and to be bored on certain described lands belonging to Gage; and that he was to deliver to the grantor in each case a specified quantity of water, measured at the canal. The consideration in each instance was to be paid upon the delivery of the water, and was to be a sum in gross in full payment for a perpetual supply thereof. In brief, the terms of the contracts import that upon Gage rested the burden of producing the water and causing the same to flow upon the surface, thence to be turned into a canal and delivered continuously and permanently, and that upon the vendees rested the burden of continuously contributing to the expenses of maintaining the canal and the branches thereof, and whatever other structure might be necessary to conduct to their lands the flow of water which was to be produced by Gage as a permanent supply from his springs and water rights and the flow of artesian wells bored or to be bored by him, and that they did not promise to contribute to the expense of boring other wells, or of supplying and operating pumps to develop new supplies of water, or to the expense of bringing such waters to the surface. The sources of water referred to in the contracts were evidently, at the time when the contracts were made, deemed sufficient to supply all the water which was to be delivered, and the installation of pumping plants was not in the contemplation of the contracting parties. The intervention of unusual droughts thereafter cannot be held to have imposed any additional obligation on the defendant, nor to have relieved the plaintiff from its obligation to supply the water which was to be furnished under the terms of the contracts. We think the demurrer was properly sustained.

It is contended that the court below erred in striking out a certain amendment to the complaint, which was inserted for the purpose of explaining the meaning of the parties to the contracts in the use of the terms "delivered at the canal" and "measured at the canal." By the amendment it was alleged that these terms did not mean, and were not intended by the parties to mean, that the water was to be delivered into the canal free of all expense required to maintain the flow thereof, but that the intention of the parties was that the water was to be delivered at the canal end of the lateral ditches or pipes, and that the purpose of the provision for the delivery at the canal was to relieve the owners of the canal of the expense of maintaining such laterals and that at all times the parties to the contracts and their successors in interest have interpreted and construed said contracts as so alleged, and have measured the water at the canal end of said laterals, and that the defendant and its predecessors in interest have paid their proportion of the expense incurred in maintaining the flow of water in said canal, including the cost of conveying it from the various wells near the head of the canal, and including the cost of diverting the flow of the Santa Ana river and conducting the same into the canal. We are unable to see how the matter so alleged could throw any light upon

the question whether the defendant in this action should be adjudged to pay any part of the expense of purchasing, installing, maintaining, and operating pumps and pumping plants. In any view of it, it is but an attempt to plead legal conclusions, and there was no error in striking it from the complaint.

The judgment is affirmed.

(173 Fed. 245.)

GRIFFIN WHEEL CO. v. SMITH.

(Circuit Court of Appeals, Ninth Circuit. October 4, 1909.)

No. 1,689.

1. MASTER AND SERVANT (§ 270*)—MASTER'S LIABILITY FOR INJURY TO SERVANT—EVIDENCE.

In an action by a servant against the master to recover for a personal injury resulting from the falling of a drawbridge, the construction of which was alleged to be defective and dangerous, it was not error to permit a workman, who assisted in building the bridge, and who testified that he told defendant's foreman in charge that the mode of construction was improper and dangerous, to state his reasons, by pointing out the defects, where such testimony was limited by the court to the purpose of showing that knowledge of the defective construction was brought home to defendant.

[Ed. Note.—For other cases, see Master and Servant, Cent. Dig. § 923; Dec. Dig. § 270.*]

2. WITNESSES (§ 380*)—RIGHT TO IMPEACH ONE'S OWN WITNESS—SURPRISE OF PARTY—USE OF PRIOR STATEMENT OF WITNESS.

Where a party has been surprised by the testimony of his own witness, he may, in the discretion of the court, be allowed to offer evidence to show that prior to the trial the witness made a contradictory statement, not for the purpose of impeaching the general character of the witness, but for the protection of the party calling him; but where the previous statement is in writing, and the party has been permitted to call the attention of the witness to the parts which contradict his testimony, it is not an abuse of discretion to exclude the entire statement, when offered in evidence for impeaching purposes.

[Ed. Note.—For other cases, see Witnesses, Cent. Dig. §§ 1214, 1219; Dec. Dig. § 380.*]

3. TRIAL (§ 260*)—INSTRUCTIONS—REQUESTS—INSTRUCTIONS ALREADY GIVEN.

The refusal of an instruction as to the assumption of risk, requested by defendant in an action by a servant for a personal injury, *held* not error, in view of the charge given, which sufficiently covered the subject.

[Ed. Note.—For other cases, see Trial, Cent. Dig. § 657; Dec. Dig. § 260.*]

In Error to the Circuit Court of the United States for the Western Division of the Western District of Washington.

Action by John Smith against the Griffin Wheel Company. Judgment for plaintiff, and defendant brings error. Affirmed.

The complaint of the defendant in error in the action which he brought against the plaintiff in error alleged that on and prior to July 18, 1907, the former was employed as a common laborer by the plaintiff in error at its foundry and machine plant, his duties, among other things, being to load and push slag cars over a narrow-gauge railroad from the foundry out to the

dump; that the said railroad was intersected by a drawbridge, over which was laid the rails of the road; that the drawbridge was raised and lowered by means of a crank, which, when turned, revolved a sprocket wheel, around which ran a double belt chain, which chain, in turning, revolved another sprocket wheel attached to an iron bar at the upper end of the chain, causing the iron bar to revolve and wind up a rope, one end of which was attached to the bar, and the other end to the outer end of the bridge by means of an open hook; that the drawbridge, when raised, remained in a vertical position, and was held there by means of the said open hook attached to the end of the rope; that the said structure and the appliances for raising and lowering the same had been constructed in a negligent, dangerous, and defective manner, in that no ratchet or other contrivance had been furnished or attached to the crank, so as to prevent the crank from running back by reason of the weight of the drawbridge when the same was being raised or lowered, or in an upright position, and that the rope was allowed to run out and permit the drawbridge to fall from an upright position without warning; that the hook at the end of the rope was a defective and improper hook, for the reason that it was an open hook; that the construction of the said structure and its appurtenances was defective and dangerous for the further reason that "absolutely no safeguard or contrivance had been provided on such structure to prevent said drawbridge from falling backwards when in an upright position." The complaint alleged, further, that the defective and dangerous condition of the structure and its appurtenances had existed for a long time prior to the accident complained of, as was well known to the plaintiff in error, but that said defective and dangerous condition was not known to the defendant in error, and that the plaintiff in error, though well knowing said defective and dangerous condition, willfully and negligently and wantonly allowed and permitted it to remain, and to be used and operated, in such unsafe and defective condition, and negligently and wantonly failed to warn the defendant in error of such defective and dangerous condition. There was evidence upon the trial that the defendant in error had no knowledge or information of the danger of the use of the drawbridge or of its defective construction; that at the time of the accident he was using and operating said drawbridge in the manner in which he had been instructed to use it by the foreman of the plaintiff in error; that on July 18, 1907, while he was discharging his duties in the foundry, he was directed by the foreman to lower the drawbridge and then haul out slag; that the bridge was then approximately upright, leaning a little backwards, and resting upon a wooden crosspiece fastened by short nails to uprights on either side; that the defendant in error went behind the drawbridge, and pushed the same out, and manipulated the crank thereof in the manner in which he had been directed so to do by the foreman; that upon his pushing the drawbridge to a perpendicular position and placing his fingers upon the crank, the open hook fell out of the ring without his knowledge, and the drawbridge, weighing between 500 and 600 pounds, fell backwards, broke away the said crosspiece, and fell upon him, crushing him to the ground and inflicting upon him serious injuries; that the bridge was constructed under the direction of the said foreman, and at the time of its erection one Furrer, a carpenter working thereon, notified the foreman that it was being constructed in a dangerous manner, that it was unsafe because it played below the shaft when upright, and because the hook, being an open one, was unsafe, for the reason that it might slip out of the ring. There was testimony that the blacksmith who had made the hook had notified the foreman that an open hook was dangerous to use upon the structure, as it was likely to come out of the ring and permit the drawbridge to fall. The testimony of these two witnesses was permitted by the court for the purpose of showing knowledge of the defects on the part of the plaintiff in error. There was testimony that, as the bridge was first constructed, two men were required to raise it, but that before the accident it was refitted with different sprocket wheels, so that one man could operate it. The jury returned a verdict for the defendant in error in the sum of $10,000, for which judgment was rendered.

Bamford A. Robb and Hudson & Holt, for plaintiff in error.
Flaskett & McMenamin, for defendant in error.

Before GILBERT and MORROW, Circuit Judges, and HUNT, District Judge.

GILBERT, Circuit Judge (after stating the facts as above). It is assigned as error that the court admitted in evidence the testimony of Furrer, the carpenter, as to the reason why he told the foreman that the bridge was dangerous at the time when it was being constructed. To that question he answered:

"Because when the bridge was up, when she got loose out of that hook, there was nothing—if it come unhooked, there was nothing—to hold it from falling either way; and, second, I didn't see any appliance or dog or ratchet on the cogwheel."

It was proper to permit the witness to testify that he warned the foreman of the plaintiff in error, at the time of constructing the bridge, that the bridge and its appliances as constructed were dangerous. But it is urged that it was error to permit him to testify as an expert as to the reasons why he considered it dangerous. The court, however, was careful to rule that the testimony was admitted only for the purpose of bringing home to the company knowledge of the defective construction of the drawbridge and its appliances, and for the purpose of presenting to the jury the question whether or not the plaintiff in error used such care as is ordinarily used by reasonably prudent persons under like circumstances; and in instructing the jury the court said of this testimony:

"It was not admitted as having any tendency to establish that the structure or appliances were not sufficient or properly made, for that is a question to be decided by you. It was admitted solely for the purpose of bringing home to the defendant knowledge of the condition of insufficiency, if it was insufficient."

As safeguarded by the ruling of the court, and the instruction to the jury, we cannot see that there was error in admitting the testimony. The witness having detailed fully the facts as to the nature of the construction and its defects as he saw them and the warning which he gave to the foreman, it was not improper to permit him to state the reason why he considered them dangerous. It was but another way of pointing out the defects which he observed in the structure, and to which he directed the attention of the plaintiff in error.

It is earnestly contended that the court erred in excluding from the evidence a certain written statement purporting to have been made by Walter Grunnert, a witness for the plaintiff in error. The statement was dated about four months after the date of the accident, and seven months before the trial. It consisted of several detached sheets of typewritten paper, the last of which only was signed by the witness. The witness identified the last sheet of the statement, but, on reading the other pages, testified that he could not say that it was an exact copy of what he had signed. He was interrogated as to the several distinct portions of the statements which were claimed to be contradictory of his testimony, and was asked whether or not he had so stated. He made no denial of having made any of the said statements so attributed to him. Some of them he admitted that he had made. As to one of them, he testified that he did not remember that he had made it, but

by the following statement: "We are prepared to meet these terms with Mr. Brader, so that you will be perfectly safe in shipping him this material." To this plaintiff replied as follows: "Your communication of the 7th instant, guaranteeing the account of P. H. Brader for the material which we are to ship him for the new Hotel Havre, and stating terms of payment on same, received. The same is satisfactory to us." To this letter defendants made no reply. *Held* that, in an action against defendants as guarantors of the account, the complaint properly alleged that defendants intended their letter as an offer to guarantee the account, and confirmed the same by their failure to reply to plaintiff's letter accepting the same as a guaranty, and that with such allegations the complaint stated a cause of action.

[Ed. Note.—For other cases, see Guaranty, Cent. Dig. § 99; Dec. Dig. § 85.*]

2. ESTOPPEL (§ 107*)—EQUITABLE ESTOPPEL—PLEADING AS ELEMENT OF CAUSE OF ACTION AT LAW.

The doctrine of estoppel in pais, while of equitable origin, is by the modern practice generally applied in actions at law, and facts constituting such an estoppel against a defendant may properly be pleaded in a complaint.

[Ed. Note.—For other cases, see Estoppel, Cent. Dig. § 297; Dec. Dig. § 107.*]

In Error to the Circuit Court of the United States for the District of Montana.

This was a suit brought by the plaintiff in error for the purpose of recovering judgment upon an alleged guaranty by defendants in error of an account of one P. H. Brader for goods, wares, and merchandise purchased by him from the plaintiff in error in November, 1904, for the purpose of furnishing the labor and materials for the installment of a heating plant and necessary plumbing and other pipe-fitting for the Havre Hotel at Havre, Mont. Plaintiff's original complaint, filed May 8, 1907, was superseded by an amended complaint filed August 12, 1907. To this amended complaint defendants demurred generally. The court overruled the demurrer, and by leave of court defendants filed a special demurrer on the ground of ambiguity and uncertainty. Upon the argument of the demurrer, plaintiff obtained leave of court to file a second amended complaint, which was filed November 15, 1907. This second amended complaint set forth in hæc verba a letter written by the defendants and plaintiff's reply thereto, alleged as constituting defendants' guaranty and plaintiff's acceptance. These letters appear hereafter in stating the material allegations of the third amended complaint. In other respects the second amended complaint was substantially identical with the first amended complaint. To this second amended complaint a general demurrer was interposed, which was sustained by the court. Thereupon plaintiff, on December 18, 1907, filed its third amended complaint which was in legal effect identical with the second amended complaint, with the addition of four new paragraphs relating to an alleged ambiguity in defendants' letter. The complaint charged that the defendants caused the ambiguity to exist, alleged the interpretation placed upon the letter by plaintiff, and charged that the defendants led plaintiff to believe that defendants' letter was an offer to guarantee the account of P. H. Brader. Defendants moved to strike out these four paragraphs as being irrelevant, immaterial, and redundant, and the court sustained the motion. By this motion the third amended complaint was left identical in legal effect with the second amended complaint, to which the court had sustained a general demurrer. Defendants did not plead to this third amended complaint, whereupon plaintiff entered a default and procured judgment thereon from Judge Dietrich, who at that time was occupying the bench in the absence of Judge Hunt, the resident judge of the district.

Immediately after the entry of this judgment defendants moved to vacate the same on the ground that the third amended complaint did not state facts

sufficient to constitute a cause of action and therefore did not support the judgment; that the third amended complaint was identical with the second amended complaint, to which a general demurrer had been sustained; that the order of the court sustaining the demurrer to the second amended complaint became and was res judicata and the law of the case between the parties until reversed or set aside; that defendants had made a motion to strike out certain portions of the third amended complaint; that the court had ordered a stay of proceedings until such motion could be heard; that the time for answering or pleading to the third amended complaint was suspended during the pendency of said motion; that neither the defendants nor their attorneys had received any notice that such motion had been decided, and therefore the default judgment was entered prematurely; and that the judgment was of no force or effect. This motion was sustained, and the judgment was vacated on the ground that it had been entered by inadvertence of the court. Subsequently, upon application of plaintiff, the clerk of the court again entered a judgment by default. Defendants immediately moved to set aside this second judgment on the ground stated in the motion to set aside the first judgment, and a further ground that the former judgment, based on the same default and complaint, had been vacated and set aside. Upon the argument the court sustained the motion and set aside the second judgment. Plaintiff thereupon made two motions, namely: (1) To vacate the order setting aside the last-mentioned judgment; and (2) to enter a judgment on defendants' default. The court overruled both of these motions, and ordered that the default of the defendants for lack of answer or demurrer to the third amended complaint be set aside, and granted defendants ten days from the date of the order in which to plead to the third amended complaint. Defendants thereupon filed a general demurrer to this third amended complaint, which was sustained, and, plaintiff refusing to plead further, judgment was entered in favor of defendants, without the right given to plaintiff to plead further.

The material allegations of the third amended complaint, as it stood when the court sustained defendants' demurrer and entered the judgment against which the present writ of error is prosecuted, are substantially as follows:

That in the fall of 1904, and prior to November 7th of that year, defendant Havre Hotel Company entered into a contract with one P. H. Brader, by the terms of which Brader was to furnish the labor and materials for the installment of a heating plant and necessary plumbing and other pipe-fitting in a building known as the "Havre Hotel," then in course of construction at Havre, Mont.; the price of such labor and materials, as agreed upon in said contract, being about $5,700. That shortly after entering into this contract Brader placed an order with the plaintiff at Minneapolis, Minn., for the necessary materials, supplies, and fixtures to be used by him in completing his contract with the Havre Hotel Company. That on November 7, 1904, defendants, for a valuable consideration, made, executed, and delivered to plaintiff a writing offering or proposing to guarantee the payment by Brader for the materials ordered of plaintiff by said Brader, which writing was as follows:

"Havre, Montana, Nov. 7th, 1904.

"Kellogg-Mackay-Cameron Co., Minneapolis, Minnesota—Gentlemen: Mr. P. H. Brader, of this place, was awarded the contract for plumbing and heating the new Hotel Havre, which is under construction here now, and informs us that he has placed the order for material for his work with your firm on terms that he is to pay you 60% of your bills when material is on the ground here (less freight), and balance in 60 days. We are prepared to meet these terms with Mr. Brader, so that you will be perfectly safe in shipping him this material."

That by this agreement defendants intended to and did offer to guarantee the payment by Brader for the materials which he had ordered from plaintiff. That defendants supposed and believed, when this writing was made, executed, and delivered, that plaintiff would understand said writing to be an offer to guarantee the payment by said Brader for the said materials when furnished by plaintiff. That on November 9, 1904, plaintiff, having received the said writing, believed and understood the same to be an offer by defendants to guarantee the proposed account of Brader, and plaintiff duly accepted the same as such; said acceptance being as follows:

"Your communication of the 7th instant, guaranteeing the account of P. H. Brader for the material which we are to ship him for the new Hotel Havre and stating terms of payment on same, received. The same is satisfactory to us."

That defendants believed and supposed at the time of the acceptance by plaintiff that plaintiff understood the writing to be an offer to guarantee the payment by Brader for the materials when furnished by plaintiff to him. That after defendants had received plaintiff's acceptance of the proposal to guarantee, by which acceptance plaintiff treated the proposal as a guaranty, defendants intentionally remained silent, and intentionally failed and neglected to notify plaintiff that they did not intend their proposal of November 7, 1904, to guarantee the account of said Brader. That defendants continued to remain silent until long after the order of Brader was accepted and the goods furnished, and until long after notified by plaintiff of the default in payment by Brader. That by their silence and failure to notify plaintiff they are estopped to deny that the said proposal of November 7, 1904, and its acceptance on November 9, 1904, did not create between plaintiff and defendant a contract of guaranty of the account of P. H. Brader. That, by their silence and failure to notify plaintiff that said proposal of guaranty was not in fact intended as such by defendants, the defendants intended to mislead and deceive plaintiff, to its damage, by inducing plaintiff to accept and act upon defendants' proposal as a guaranty of the account of Brader; and plaintiff, in reliance upon the silence of defendants, and relying upon their failure and neglect to notify plaintiff that their proposal of guaranty was not intended as such, and being misled and deceived by such silence, neglect, and failure, accepted the order of Brader, and in reliance upon the credit of the defendants furnished the materials to him. That plaintiff, but for such reliance, would not have accepted the order and would not have furnished the materials. That defendants are estopped to now deny that the said proposal to guarantee and the acceptance thereof did not create, as between the defendants and the plaintiff, a contract of guaranty of the account of Brader. That plaintiff, in reliance upon the guaranty made by the defendants, and in reliance upon the credit of the defendants, accepted the order of Brader for the materials, supplies, and fixtures so placed with it by the said Brader, and with the full knowledge of the defendants delivered to the said Brader the materials ordered by him; the same being for the agreed sum of $3,577.84. That Brader thereafter made default in the payment of said amount for said materials, and failed, neglected, and refused to pay the amount according to the terms of the guaranty. That plaintiff used due diligence and its utmost endeavors to collect the same, failing in which it brought suit against Brader for the amount, and judgment was entered against him on April 26, 1906. That execution was issued, and the judgment returned partially satisfied, leaving a deficiency of $3,147.61. That on January 7, 1907, plaintiff notified defendants of the default of Brader, and demanded that defendants pay the same in accordance with their guaranty. That they wholly failed, neglected, and refused to do so. Judgment was demanded against the defendants for the sum of $3,147.61, with accruing costs and interest, and for costs of suit.

Galen & Mettler, for plaintiff in error.

F. N. Ulter and Clayberg & Horsky, for defendants in error.

Before GILBERT, ROSS, and MORROW, Circuit Judges.

MORROW, Circuit Judge (after stating the facts as above). The defendants in error submit that the order sustaining the demurrer to the second amended complaint fully and finally determined that the facts stated in that complaint did not constitute a cause of action, and that such determination became and was res judicata of that question until reversed or set aside. The third amended complaint, after certain paragraphs had been struck out by the court, was the same in legal effect as the second amended complaint; and it is contended that

the ruling of the court on the demurrer to the second amended complaint disposed of the third amended complaint. The effect of sustaining the position of the defendants in error would be to hold that the judgment entered upon the third amended complaint was void and of no effect, and the writ of error would have to be dismissed—a result not entirely without justification, perhaps, in view of the earnest, but equally technical, contention of the plaintiff in error that the court abused its discretion in setting aside the default judgment in favor of the plaintiff. In a technical controversy of this character it may be well said that "they who take the sword shall perish with the sword." But, without expressing an opinion upon these proceedings, we will consider the case upon its merits.

The important question of the case is whether the third amended complaint states a cause of action. The action as stated is based upon the letter written by defendants to plaintiff on the 7th of November, 1904, and a letter in reply, written by plaintiff to defendants on November 9, 1904, and received by defendants on November 11, 1904. The letter written by defendants refers to an order placed by one P. H. Brader with the plaintiff for material required in carrying out a contract for plumbing and heating a new hotel. The letter set forth the terms upon which the plaintiff was to furnish this material to Brader and said:

"We are prepared to meet these terms with Mr. Brader, so that you will be perfectly safe in shipping him this material."

In reply to this letter the plaintiff wrote to the defendants:

"Your communication of the 7th instant, guaranteeing the account of P. H. Brader for the material which we are to ship him for the new Hotel Havre and stating terms of payment on same, received. The same is satisfactory to us."

To this letter it is alleged defendants made no reply, and remained silent and failed to notify the plaintiff that they did not "guarantee the account" with Brader, as stated in plaintiff's letter. Defendants' letter is clearly a proposal relating to an order placed by Brader with plaintiff for the supply of material to enable Brader to carry out a contract for plumbing and heating a hotel. The terms of payment for this material were stated, and defendants said they were "prepared to meet these terms with Mr. Brader." This sentence so far is obscure and uncertain as to its meaning, but the remainder of the sentence is not obscure or uncertain. It is: "So that you will be perfectly safe in shipping him this material." This last part of the sentence must have been intended to convey an assurance that plaintiff would be paid for the material; otherwise, the letter would be meaningless. How safe? By the guaranty contained in defendants' letter? This was obviously what plaintiff wanted to know, and accordingly plaintiff promptly wrote to defendants that their communication "guaranteeing the account" of Brader was satisfactory. Had defendants used this language in their letter, there would have been no controversy as to the guaranty. What did defendants do then? They remained silent. Could any inference relevant to the case be drawn from this silence? If so, it was a fact to be stated in the complaint, and the inference was

a question for the jury. A reasonable and legitimate inference was that the defendants assented to the interpretation placed upon the letter by plaintiff, and that they thereby intended to be understood as guaranteeing the account of Brader. Whether it was sufficient of itself to justify such an inference would be a question for the jury to determine under the instructions of the court. But our present concern is as to whether it was a statement of a fact which, taken in connection with the other facts alleged, constituted a cause of action. We think it did. We think it was properly stated, and constituted an important element in the sufficiency of the complaint.

The other charge, that defendants by their silence intended to mislead and deceive plaintiff by inducing plaintiff to accept and act upon defendants' proposal as a guaranty of the account of Brader, was stated to be for the purpose of setting up a legal estoppel; that is to say, that defendants by their conduct had placed themselves in a position where the law declares that they will not be heard to deny the guaranty. It is charged that, as they were silent when good faith required that they should have spoken, they cannot now be heard to say that that is not true which their conduct unmistakably declared was true, and upon the faith of which the plaintiff acted. This is an application of the doctrine of estoppel in pais, which, while originating in courts of equity, is now very generally applied in cases arising in courts of law. Dickerson v. Colgrove, 100 U. S. 578, 582, 25 L. Ed. 618; Kirk v. Hamilton, 102 U. S. 68, 79, 26 L. Ed. 79; Paxson v. Brown, 61 Fed. 874, 10 C. C. A. 135, 143; Union Pac. Ry. Co. v. United States, 67 Fed. 975, 979, 15 C. C. A. 123, 127.

In this view of these allegations, we think the third amended complaint stated a cause of action. The demurrer of the defendant to this complaint should therefore have been overruled.

The judgment of the court is reversed, with instructions to overrule the demurrer.

(173 Fed. 254.)

UNITED STATES v. DUNNE.

(Circuit Court of Appeals, Ninth Circuit. September 7, 1909.)

No. 1,670.

1. CRIMINAL LAW (§ 1192*)—APPEAL AND ERROR—PROCEEDINGS ON MANDATE.

Where, upon the death of a defendant in a criminal case in a federal court pending proceedings in error in the Supreme Court to review a judgment of conviction, the writ of error was dismissed and the cause was remanded for such further proceedings as "according to right and justice and the laws of the United States ought to be had," on the filing of such mandate the jurisdiction of the trial court reattached, and continued until action was taken pursuant to the mandate, and the court had authority to consider and act upon a motion in abatement.

[Ed. Note.—For other cases, see Criminal Law, Dec. Dig. § 1192.*]

2. COURTS (§ 405*)—CIRCUIT COURT OF APPEALS—APPELLATE JURISDICTION—DECISIONS REVIEWABLE.

An order of a Circuit Court of the United States declaring a judgment in a criminal action abated by reason of the death of the defendant after the entry of the judgment is in an independent proceeding of a civil na-

ture, and reviewable on writ of error by the Circuit Court of Appeals at the instance of the United States.

[Ed. Note.—For other cases, see Courts, Cent. Dig. §§ 1097–1103; Dec. Dig. § 405.*

Jurisdiction of Circuit Court of Appeals in general, see notes to Lau Ow Bew v. United States, 1 C. C. A. 6; United States Freehold Land & Emigration Co. v. Gallegos, 32 C. C. A. 475.]

3. FINES (§ 17½*)—DEATH OF DEFENDANT AFTER JUDGMENT—ABATEMENT OF CAUSE.

A judgment entered against a defendant convicted under Rev. St. § 1782 (U. S. Comp. St. 1901, p. 1212), which provides that any person violating the same shall be deemed guilty of a misdemeanor and shall be imprisoned and fined, is wholly penal, and the death of the defendant after judgment and while the case is pending in an appellate court on writ of error operates to abate the entire cause of action, and the fine is not collectible from the defendant's estate.

[Ed. Note.—For other cases, see Fines, Cent. Dig. § 2701; Dec. Dig. § 17½.*]

In Error to the Circuit Court of the United States for the District of Oregon.

For opinion below, see 163 Fed. 1014.

In February, 1905, John H. Mitchell, then a United States Senator from the state of Oregon, was indicted by the grand jury for the district of Oregon for a violation of section 1782 of the Revised Statutes of the United States for agreeing to receive and receiving from one Frederick A. Kribs compensation for services rendered in appearing before the Commissioner of the General Land Office for the purpose of pursuading the Commissioner to make special, expedite, and approve certain fraudulent applications and claims for tracts of public lands in the state of Oregon, in which the said Kribs was interested. The indictment contains seven counts, each alleging in substance that Mitchell, while a Senator of the United States, had accepted and received from Kribs various amounts set forth in the separate counts in payment for services rendered in appearing before the Commissioner of the General Land Office with relation to the applications, proceedings, claims, matters, and things in which the United States was directly interested. On this indictment Senator Mitchell was tried before a jury in the Circuit Court for the district of Oregon and found guilty. On the verdict as rendered by the jury the court, on July 25, 1905, entered a judgment that the defendant pay a fine of $1,000, and that he be imprisoned for a term of six months. Thereupon Senator Mitchell gave a supersedeas bond, and on July 29, 1905, sued out a writ of error from the Supreme Court of the United States. While the writ of error was pending in the Supreme Court, Senator Mitchell died. This fact being suggested to the court by counsel, the writ of error was dismissed by the court, and a mandate issued to the Circuit Court "that such proceedings be had in said cause as according to right and justice, and the laws of the United States, ought to be had, the said writ of error notwithstanding." This mandate was filed in the Circuit Court on August 15, 1906, but no proceedings were had thereon until July 11, 1907, when David M. Dunne, the defendant in error, and the duly appointed and qualified administrator of the estate of John H. Mitchell, filed a motion, supported by his affidavit, praying for an order declaring the entire proceedings in the cause abated by reason of the death of the defendant, and for the cancellation of the fine imposed upon the defendant, together with the entry thereof in the judgment docket, and declaring the same to be no longer of any validity. The motion was granted, and a judgment entered accordingly. To this judgment the United States prosecutes the present writ of error.

John McCourt, U. S. Atty.

Bauer & Greene, for defendant in error.

Before GILBERT, ROSS, and MORROW, Circuit Judges.

MORROW, Circuit Judge (after stating the facts as above). In United States v. Pomeroy (C. C.) 152 Fed. 279, the defendant was convicted of giving rebates in violation of the interstate commerce act and its amendments, and sentenced to pay a fine. The defendant died after judgment and before the fine was paid. It was held by the Circuit Court that the judgment and entire proceedings abated on the death of the defendant, and it was not a claim enforceable against his personal representatives. An order was entered accordingly. The case was taken to the Circuit Court of Appeals for the Second Circuit upon writ of error, where the order was reversed upon the ground that when the order was entered the court had lost control of the judgment. The term in which the judgment was entered had expired before any proceedings in abatement had been taken. When, therefore, the court in a subsequent term made the order abating the judgment and all proceedings thereon, it had no power to make the order, and its action in making the same was held to be erroneous.

It is suggested on behalf of the United States that the same question arises in this case; that the judgment against Mitchell was entered on July 25, 1905, and the term in which the judgment was entered terminated on the first Monday of October, 1905, and the motion to abate the judgment was not entered until June 11, 1907. But the writ of error and supersedeas bond stayed the execution of the judgment and removed the record into the Supreme Court of the United States. Such proceeding, under section 1007 of the Revised Statutes, operated to suspend the execution of the judgment of the Circuit Court pending the writ of error in the Supreme Court and until the case was there determined or remanded. The Slaughter-House Cases, 77 U. S. 273, 291, 19 L. Ed. 915. Upon the death of the defendant and the suggestion of that fact to the Supreme Court by counsel, the writ of error was dismissed and the cause remanded to the Circuit Court, with direction "that such proceedings be had in said cause as according to right and justice, and the laws of the United States, ought to be had." When this mandate was filed in the Circuit Court on August 15, 1906, the jurisdiction of that court reattached, and continued until action was had in accordance with the direction of the mandate. Such action was had in due course of procedure, and resulted in the judgment now before this court. The expiration of the term after the entry of the original judgment did not, under the circumstances, deprive the Circuit Court of jurisdiction to act upon the mandate; nor did the expiration of the term in which the mandate was received operate to deprive the court of jurisdiction to enter a judgment in accordance with its direction, when the proceedings thereon in due course required such action. It follows that the Circuit Court had jurisdiction to enter the judgment now under consideration.

The defendant in error moves the court to dismiss the writ of error for want of jurisdiction, on the ground that this is a criminal case, and no right has been conferred by law upon the United States to obtain a review of a judgment in such a case by writ of error from this court. In United States v. N. Y. Cent. & H. R. R. Co., 164 Fed.

324, 90 C. C. A. 256, the Circuit Court of Appeals passed upon this identical question, and held that an order of the Circuit Court declaring a judgment in a criminal action abated by reason of the death of the defendant after the entry of the judgment was an independent proceeding of a civil nature, which might be reviewed in the Circuit Court of Appeals at the instance of the United States upon writ of error. In discussing the question of jurisdiction the court there said:

"At the outset the defendant contends that the government has no right to proceed in this way; that a writ of error can be sued out by the United States in a criminal case only to the Supreme Court, and to that court only in particular instances. The right of the government may be so limited in criminal cases. But this is not a criminal case. The issue in the criminal proceedings was the guilt of the accused. That issue had been terminated before these proceedings were instituted. Indeed, the very occasion for these proceedings was the closing of the criminal case by the rendition of the judgment. Instead of being criminal in their nature, these proceedings constitute, in effect, a civil suit by the representative of Mr. Pomeroy's estate to relieve it from the payment of the judgment, for a cause wholly apart from the question of his guilt or innocence. The contention that the United States has no standing to prosecute this writ is, therefore, not well founded."

We concur in that view. The words "criminal case" apply to proceedings in a court against an accused person charged with doing something forbidden, who, if found guilty, is punished. Bessette v. W. B. Conkey Co., 194 U. S. 324, 326, 24 Sup. Ct. 665, 48 L. Ed. 997. The present proceeding in abatement of judgment is not against an accused person charged with a crime, nor is an accused person a party to the proceeding. The judgment is against the person of John H. Mitchell; but no further proceeding can be had against him. The power of the court to enforce its judgment against him is at an end. The question of the civil liability of the estate of John H. Mitchell upon the judgment must, therefore, be a civil case, as distinguished from a criminal case. It follows that this court has jurisdiction over the writ of error.

The remaining question is whether the cause abated by the death of the defendant. In a criminal case the death of the accused after judgment, and while the case is pending in the appellate court upon writ of error, operates to abate the cause. List v. Pennsylvania, 131 U. S. 396, 9 Sup. Ct. 794, 33 L. Ed. 222; Menken v. Atlanta, 131 U. S. 405, 9 Sup. Ct. 794, 33 L. Ed. 221. In Schreiber v. Sharpless, 110 U. S. 76, 3 Sup. Ct. 423, 28 L. Ed. 65, the Supreme Court said:

"The personal representatives of a deceased party to a suit cannot prosecute or defend the suit after his death, unless the cause of action, on account of which the suit was brought, is one that survives by law. Rev. St. § 955 (U. S. Comp. St. 1901, p. 697). At common law actions on penal statutes do not survive (Com. Dig. tit. "Administration," B, 15), and there is no act of Congress which establishes any other rule in respect to actions on the penal statutes of the United States. The right to proceed against the representatives of a deceased person depends, not on forms and modes of proceeding in a suit, but on the nature of the cause of action for which the suit is brought. If the cause of action survives, the practice, pleadings, and forms and modes of proceeding in the courts of the state may be resorted to in the courts of the United States for the purpose of keeping the suit alive and bringing in the proper parties. Rev. St. § 914 (U. S. Comp. St. 1901, p. 684). But, if the cause of action dies with the person, the suit abates and cannot be revived. Whether an action survives depends on the substance of the cause of action, not

on the forms of proceeding to enforce it. As the nature of penalties and forfeitures imposed by acts of Congress cannot be changed by state laws, it follows that state statutes, allowing suits on state penal statutes to be prosecuted after the death of the offender, can have no effect on suits in the courts of the United States for the recovery of penalties imposed by an act of Congress."

The rule that a statutory penalty merged in the judgment becomes a debt, and may be recovered from the estate of the judgment debtor, does not apply in this case. The indictment was under section 1782 of the Revised Statutes (U. S. Comp. St. 1901, p. 1212), providing that every person offending against the statute should be deemed guilty of a misdemeanor, and should be imprisoned and fined. The verdict of the jury was guilty. The judgment imposed a punishment of a fine and imprisonment as provided by the statute. This judgment is before us, and is made the basis of the claim of the United States against the estate of the defendant. For the present purpose it is an indivisible judgment and wholly penal. It cannot be separated into parts, and one part kept alive as an indemnity, while the other, as a penalty, perishes with the death of the defendant. "Upon the face of the record, the action arises ex delicto; and all private criminal injuries or wrongs, as well as all public crimes, are buried with the offender. 3 Bac. Abr. 539." United States v. Daniel, 47 U. S. 13, 12 L. Ed. 323. The entire cause of action abated upon the death of the defendant. List v. Pennsylvania, supra; Menken v. Atlanta, supra.

The judgment of the Circuit Court is affirmed.

(173 Fed. 258.)

THE THRASHER.

(Circuit Court of Appeals, Ninth Circuit. August 2, 1909.)

No. 1,704.

1. SEAMEN (§ 30*)—DISCIPLINE AND PUNISHMENT—STATUTORY PROVISIONS.

Rev. St. § 4596, as amended by Act Dec. 21, 1898, c. 28, § 19, 30 Stat. 760 (U. S. Comp. St. 1901, p. 3113), which provides that seamen for willful disobedience to lawful commands shall be punishable at the option of the master by being placed in irons and by a forfeiture of pay, and for continued willful disobedience by being placed in irons on bread and water until such disobedience shall cease, and also by a forfeiture of pay, does not deprive the master of authority in his discretion to impose a milder punishment.

[Ed. Note.—For other cases, see Seamen, Cent. Dig. §§ 195-211; Dec. Dig. § 30.*]

2. SEAMEN (§ 30*)—DISCIPLINE AND PUNISHMENT—CONSTRUCTION OF STATUTE —"PUNISHABLE."

In Rev. St. § 4596, as amended by Act Dec. 21, 1898, c. 28, § 19, 30 Stat. 760 (U. S. Comp. St. 1901, p. 3113), providing that offenses by seamen shall be punishable as therein prescribed, the word "punishable" does not mean "must be punished," but "may be punished" as therein provided.

[Ed. Note.—For other cases, see Seamen, Cent. Dig. §§ 195-211; Dec. Dig. § 30.*

For other definitions, see Words and Phrases, vol. 7, p. 5849.]

3. SEAMEN (§ 30*)—DISCIPLINE AND PUNISHMENT—LAWFULNESS OF PUNISHMENT.

An order of the master of a vessel requiring a seaman to go aloft and scrape the masts as a punishment for fighting in violation of orders, *held* within the master's discretion, and the placing of the seaman in irons with a stick under his knees and over his arms for his refusal to obey the first order, until he would consent to do so, not to entitle him to recover damages against the ship; the evidence being that it caused him no appreciable suffering.

[Ed. Note.—For other cases, see Seamen, Cent. Dig. §§ 195–211; Dec. Dig. § 30.*]

Appeal from the District Court of the United States for the Northern District of California.

Edward C. Dean, appellant, brought a libel in rem against the whaling vessel Thrasher to recover $600 damages on account of alleged breach of the contract of good treatment. Appellant's allegations are, in effect, that he was a mariner, and, after signing shipping papers, went aboard the Thrasher in the month of February, 1908, to go as a seaman for a whaling voyage in the North Pacific and Arctic Oceans; that in April, 1908, while the vessel was in Bering Sea, fast in ice, with the temperature below freezing, the master of the ship, without justification, caused libelant to be sent aloft, and there to be kept for about an hour and a half scraping the main royal and topgallant masts; that while scraping the masts libelant's hands became so numb that he could not continue scraping; that thereupon said libelant was ordered down from aloft, and that the master caused handcuffs to be put on libelant's wrists, and his wrists, when handcuffed, to be placed below his knees with a pole placed over each of his arms at the elbows, and under each of his knees, the pole being lashed with stout ropes; that while so tied libelant was confined in the runway of the vessel for about 45 minutes; that after he was released the master again sent him aloft to scrape the masts, and kept him aloft for about an hour, when he was permitted to come down and to have one hardtack and a cup of water, and was then again sent aloft to continue scraping, and was kept aloft about an hour and a half.

Claimant denies the allegations of cruelty and breach of the contract of good treatment, and alleges, in substance, that during good weather the libelant was sent aloft to scrape the top-gallant mast as a punishment for assaulting other members of the crew; that libelant persistently disobeyed the orders of the master, and was thereupon ordered to be put in irons. Claimant sets up willful disobedience of orders, and denies that a stick was put under libelant's knees so as to cause him any suffering unless his position would continue for a long period of time. It says that the master told libelant that he could be released the moment he would declare himself ready to obey orders and submit to the master's reasonable discipline; but that libelant willfully refused to obey orders, and therefore voluntarily remained in irons and confinement, but was released as soon as he agreed to submit to the master's lawful orders. Claimant denies that the master caused libelant to be sent aloft a second time without justification, denies that the master kept him aloft for about an hour, and says that the master kept him aloft a much shorter time, and only long enough to ascertain that libelant obeyed lawful orders and submitted to lawful discipline, denies that libelant was sent aloft a third time, and denies all allegations of pain, suffering, and distress.

The issues were tried before the District Court, where it was decided that the evidence sustained the allegations of the answer, and that the facts affirmatively stated in the answer constituted a sufficient defense to claim of libelant for substantial damages. Decree was entered dismissing the libel with costs. Libelant appeals.

F. R. Wall, for appellant.

Andros & Hengstler, for appellee.

Before GILBERT and ROSS, Circuit Judges, and HUNT, District Judge.

HUNT, District Judge (after stating the facts as above). We will assume that appellant is correct in his position that sections 4596 and 4597 of the Revised Statutes of the United States of 1878, as amended by Act Dec. 21, 1898, c. 28, §§ 19, 20, 30 Stat. 760, 761 (U. S. Comp. St. 1901, pp. 3113, 3115), relating to offenses of seamen and punishment therefor, are applicable to whalers as seamen, and that by section 26 of the act whaling vessels are brought within its provisions, and upon this assumption we will inquire whether the decision of the District Court should be overruled or not.

There was ample evidence to show that the libelant seaman had frequently made assaults upon his shipmates, that he was a quarrelsome man of bullying nature, and that he had been reprimanded for "slugging" shipmates on several occasions shortly before the incidents which gave rise to this action. It appears that upon April 11, 1908, he assaulted a shipmate, thus disobeying the captain's express order that there should be no fighting. While the captain was reprimanding him for this last assault, several of the crew told the mate that, unless the captain stopped libelant from fighting the men in the forecastle, they would kill him. The mate at once told the captain what the men said, and, to punish libelant for the assault, the captain ordered him to go to the masthead and scrape it. The temperature was probably just below freezing, so libelant took his mitts and coat. Claimant's evidence is to the effect that libelant sat at the masthead for about 20 minutes, but did not scrape; that thereupon he was called down, and asked if he was going to scrape the mast; that he said "No," and refused duty; that the captain then asked him if he knew what would become of him if he refused to do duty; that he replied that he would go in irons first, and would stay there; that thereupon, by the captain's orders, the mate put libelant in irons with his wrists below the knees, and a stick placed under his knees, so tied with twine as to prevent him from shoving his feet out; that libelant was told that he would be released whenever he would "sing out" and "be a man," and do his duty. Libelant was put in the runway, where he remained in irons about 45 minutes, when he asked to be and was released. It is in evidence that he was then again sent to the masthead for about half an hour, finished scraping, and came down, and was given a meal of hardtack and water for dinner. Whether he was sent back to the masthead a third time, is not clear. The story of libelant conflicted in part with that of the master and mate, libelant saying, among other things, that he scraped the mast until his hands became numb, and that he did not refuse to scrape any longer. He also said that by his treatment and the position he was in he was made to suffer, while claimant's evidence is to the effect that his position would not produce suffering unless he remained in it for some period of time.

From all these facts, it is plain that libelant was guilty of willful disobedience of the order of the master not to fight, and that he was liable to severe punishment therefor. The act of December 21, 1898 (Rev. St. § 4596) provides that, whenever any seaman who has been

lawfully engaged commits any of the offenses enumerated in the act, "he shall be punishable as follows":

"Fourth. For willful disobedience to any lawful command at sea, by being, at the option of the master, placed in irons until such disobedience shall cease, and upon arrival in port, if of the United States, by forfeiture from his wages of not more than four days' pay, or upon arrival in a foreign port by forfeiture from his wages of not more than four days' pay, or, at the discretion of the court, by imprisonment for not more than one month.

"Fifth. For continued willful disobedience to lawful command or continued willful neglect of duty at sea by being, at the option of the master, placed in irons, on bread and water, with full rations every fifth day, until such disobedience shall cease, and upon arrival in port, if of the United States, by forfeiture, for every twenty-four hours' continuance of such disobedience or neglect, of either a sum of not more than twelve days' pay or sufficient to defray any expenses which have been properly incurred in hiring a substitute, or upon arrival in a foreign port, in addition to the above penalty, by imprisonment for not more than three months, at the discretion of the court."

As we understand appellant's argument, it is that inasmuch as the statute quoted provides that one doing an act is punishable in a certain way, and inasmuch as there is no expressed liability to punishment in any other way, the master of a ship has no right to impose any punishment upon a seaman committing an offense enumerated in the statute by means other than those expressly specified in the statute. As applied to the facts, it is contended that, when this libelant willfully disobeyed the command of the master against fighting, the only right of punishment which the master had was to put him in irons, to enforce forfeiture of wages or otherwise to punish more severely, as the disobedience may have warranted, and as the statute has specified. Involved, too, in this argument, is the proposition that the master exceeded his authority in the first order to libelant to scrape the masts. The necessary deduction from this reasoning is that the master of a ship has no right or power to impose less punishment for disobedience of a lawful order than the full measure written in the law, and that no matter how slight may be the disobedience to a command, or how trivial may be the continued neglect of duty, if it has been willful, the offending seaman must either go unpunished altogether or be put into irons with possible loss of pay, and on bread and water until the disobedience shall cease. If this is correct, the master has no power to punish by way of change of duty. Carried farther forward, it leads to the conclusion that there can be no administration of correctional discipline by way of confinement unless in irons, and that irons alone may not fulfill the exactions of the law in instances of continued willful disobedience, for the language specifies irons and bread and water, and it may be forfeiture of pay besides. We cannot accept the conclusions made inevitable by the argument. They would lead to the establishment of rules practically taking from the master a right to punish mildly if the exigencies warranted his doing so. A result would be the denial of the master's discretion to exercise humane consideration for seamen, which pervades the spirit of maritime law, notwithstanding the absolute authority necessarily possessed by a master on board his ship.

The common as well as the marine law makes it lawful for the master to correct mariners in a reasonable and moderate manner as the

particular circumstances of each case may call for; and in providing that a seaman guilty of willful disobedience "shall be punishable" by irons and forfeiture of pay, or irons, bread and water, and forfeiture of pay, as the circumstances of the disobedience may warrant, Congress could not have meant to circumscribe the right of the master by taking from him authority to impose a less severe punishment, where the master in his discretion chooses to impose it, or to deprive him of the power to apply punishment by way of correction to preserve the good order and discipline of the ship. The word "punishable" does not mean "must be punished" but "liable to be punished" as specified. In re Mills, 135 U. S. 263, 10 Sup. Ct. 762, 34 L. Ed. 107; People v. Keating, 61 Hun, 260, 16 N. Y. Supp. 748; U. S. v. Watkinds (C. C.) 6 Fed. 152; People ex rel. v. Murphy, 185 Ill. 623, 57 N. E. 820. Surely it does not lie in the mouth of a seaman who has been guilty of willful disobedience of a lawful order to complain that the punishment imposed was not as severe as the offense made him liable for. In discussing the rights and duties of masters of ships in relation to the crew during the voyage Judge Story, in United States v. Freeman, Fed. Cas. No. 15,162, said:

"It is doubtless true that the master has a right to require of them a prompt and ready performance of duty, and an habitual obedience to reasonable commands at all times. The safety of the ship and the success of the voyage essentially depend upon the due enforcement of this right. And in proportion as the urgency of the occasion, and the necessities of the sea service, require instant compliance with such commands, the duty of the seamen to obey become more pressing and obligatory. If obedience does not follow, the master may compel it by punishment, and the nature and extent of the punishment must be decided by the exigency of the case. The master may also apply punishment by way of correction for past as well as present offenses to preserve the good order and discipline of the ship. But, after all, however summary or strict may be his power, it is not unlimited, nor is it to be exercised in an arbitrary, cruel, or revengeful manner. The authority of the master on board the ship is nearly allied to that of a parent, and is to be used with reasonable tenderness and humanity. No punishment can be inflicted unless for reasonable provocation or cause; and it must be moderate and just and proportionate to the nature and aggravation of the offense. The law does not permit the master to gratify a brutal and low revenge, or to inflict cruel and unnecessary punishments. It allows no excess, either in the mode or the nature, or the object of the punishment. It upholds the exercise of the authority only when it is for salutary purposes, not when it arises from personal prejudice, caprice, or dislike, or from gross and vindictive passions."

The order to scrape the masts was in itself to do a seaman's duty, and the District Court evidently did not believe libelant's story that he suffered seriously from cold. We cannot find that the order was unreasonable or unjustifiable, although the motive for the order was to punish. It was very much less severe a penalty than might have been given if the full authority of the master had been used. Libelant ought to have obeyed; and his willful disobedience brought upon him the consequences. Having refused to obey such lawful order, to enforce obedience, the imposition of the punishment specified in the statute became the absolute right of the master. Hence libelant cannot complain because he was afterwards put in irons and given bread and water. If, after his release, he was again sent to the mast, it is not a just cause for complaint. The putting of the stick under libelant's

knees was an act on the part of the master that cannot be approved of, but the weight of the evidence is that it caused no appreciable suffering for the time libelant remained in irons.

The learned judge of the court below must have so found, and, as his conclusion was supported by evidence, this court will not set it aside. Libelant's case is without substantial merit.

Decree affirmed.

(173 Fed. 263.)

FREEDING et al. v. ALLEN et al.

(Circuit Court of Appeals, Ninth Circuit. September 7, 1909.)

No. 1,667.

LICENSES (§ 33*) — ALASKA — CONSTRUCTION OF STATUTES—APPORTIONMENT OF LICENSE MONEYS IN TOWNS.

The power given to the District Court in Alaska by Act March 2, 1903, c. 978, 32 Stat. 944, to apportion the license moneys collected from persons for doing business within an incorporated town, and thereby required to be paid over by the clerk of the court to the treasurer of the municipality, and to designate by order the proportion that should be used for school and for municipal purposes, respectively, was taken away by Act April 28, 1904, c. 1778, 33 Stat. 529, which for the first time authorized the common council of incorporated towns to levy a general tax for school purposes, and required it to establish and maintain schools and provide the necessary funds therefor, and which also provided that the license moneys should be paid over to the municipal treasurer without qualification, "to be used for school and municipal purposes," and repealed all inconsistent acts. Since such act the apportionment of such fund rests with the common council of the town.

[Ed. Note.—For other cases, see Licenses, Cent. Dig. § 67; Dec. Dig. § 33.*]

In Error to the District Court of the United States for the Second Division of the District of Alaska.

John Rustgard and Campbell, Metson, Drew, Oatman & MacKenzie, for plaintiffs in error.

C. S. Hannum, Albert H. Elliot, and John T. Reid, for defendants in error.

Before GILBERT and ROSS, Circuit Judges, and HUNT, District Judge.

ROSS, Circuit Judge. The plaintiffs in error constitute the common council of the town of Nome, in the district of Alaska, and the defendants in error the school board of the Nome school district. The school board having presented a petition in writing to the court below, asking its order apportioning the federal license moneys collected by it in pursuance of law, so that the petitioner should receive 50 per cent. thereof, or such other percentage as the court should deem proper, up to the amount of $20,500, with which to pay the indebtedness already incurred and to be incurred during the school year then ensuing, and directing the treasurer of the town of Nome to pay directly to the petitioners such percentage of the license moneys as should be apportioned by the court for the purposes stated, and an order to show cause

why the petition should not be granted having been served upon the plaintiffs in error by the direction of the court, objections were filed by them, to which the petitioners replied. The hearing resulted in these findings:

"(1) That the sum of $20,500 is the proper amount to be apportioned for the use of the school board for the purpose of enabling the board to pay the indebtedness against the school district, and for the due maintenance of the Nome public schools for the ensuing school year.

"(2) That on the 26th day of August, 1908, the finance committee of the common council of the town of Nome recommended that the request of the Nome school board that the $20,500 be made available for school purposes for the ensuing school year be granted, and that said sum be made available for such purposes, with the following exception: That $3,000 thereof be deducted from the amount so to be made available for school purposes for the current year, until such time as the school board has exhausted its resources at law to recover the sum of $3,000 claimed by said common council to have been illegally withdrawn from the funds of the school district by members of former school boards.

"(3) That on the 29th day of August, 1908, the recommendation of the finance committee of the common council of the town of Nome was regularly approved by the members of said common council in regular meeting assembled, and that by reason of the action of said common council only $17,500 was made available for school purposes, and that $3,000 of said sum of $20,500 is not available for school purposes; the same being made dependent upon action of said petitioners to recover the said sum of $3,000 claimed by said common council to have been illegally expended by former members of the school board.

"(4) That said sum of $3,000, in addition to said sum of $17,500, should be made available for school purposes for the ensuing school year, without regard to any liability of former members of the Nome school board to the Nome school district."

Upon these findings the court adjudged that the council—

"set apart, apportion, and pay over to the treasurer of the Nome school board, for school purposes for the ensuing school year, the additional sum of $3,000 from the federal license moneys now in the hands of the clerk of this court, or hereafter to come into his hands as such clerk, and by him paid over to the common council of the town of Nome."

The power of the court below to make the order is questioned by this writ of error, which question depends upon the proper construction of various statutes enacted by Congress in respect to the district of Alaska.

The act of March 3, 1899 (30 Stat. 1253, 1336, c. 429), provided, among other things, that any person or persons, corporation, or company prosecuting or attempting to prosecute any of certain enumerated lines of business within the district of Alaska should first apply for and obtain license so to do from a District Court or a subdivision thereof in said district, and pay for such license for the respective lines of business and trade as therein specified. That act was amended by one of June 6, 1900, entitled "An act making further provision for a civil government for Alaska, and for other purposes" (31 Stat. 321, 330, 521, c. 786), which, among other things, provided for the incorporation of any community having 300 permanent inhabitants, with certain enumerated officers, including "a school board of three directors, who shall have the exclusive supervision, management and control of the public schools and school property within said corporation, and shall be elected in the same manner and for the same term as the council,"

therein also provided for, and further providing that the treasurer of the corporation shall be ex officio treasurer of the school board, and—

"that fifty per cent. of all license moneys provided for by act of Congress approved March third, eighteen hundred and ninety-nine, entitled 'An act to define and punish crimes in the district of Alaska, and to provide a Code of Criminal Procedure for said district,' and any amendments made thereto, required to be paid by any resident, person, or corporation, for business carried on within said corporation, shall be paid over by the clerk of the United States District Court receiving the same to the treasurer of said corporation, upon taking his receipt therefor in duplicate, one of which duplicate receipts shall be forwarded to the Secretary of the Treasury of the United States by the clerk as a voucher in lieu of cash, and the other receipt shall be retained by the clerk. The money received by the treasurer of the corporation shall be used under the direction of the council for school purposes."

Prior to the act just mentioned, to wit, that of June 6, 1900, there was no provision for the organization of any municipal corporation within the district of Alaska, and while the council of such corporations as should be organized thereunder was thereby given the power to levy and collect taxes for certain specified local purposes, no power was given such council to levy any tax for school purposes; the schools being provided for, as above shown, by the payment by the clerk of the District Court to the treasurer of the municipal corporation of one-half of the license moneys coming into his hands.

The subsequent act of March 3, 1901 (31 Stat. 1438, c. 859), so amended the act of June 6, 1900, as to provide:

"That where it is made to appear to the satisfaction of the District Court that the whole amount heretofore or hereafter received by the treasurer of the corporation from the clerk of the court is not required for school purposes, the court may from time to time, by orders duly made and entered, with a statement of the facts upon which they are based, authorize the expenditure of the accumulated surplus, or any part thereof, for any of the municipal purposes enumerated in this chapter. Fifty per centum of all license moneys provided for by said act approved March third, eighteen hundred and ninety-nine, and any amendments made thereto, that may hereafter be paid for business carried on outside incorporated towns in the district of Alaska and covered into the Treasury of the United States shall be set aside to be expended so far as may be deemed necessary by the Secretary of the Interior, within his discretion and under his direction, for school purposes outside incorporated towns in said district of Alaska."

On the 2d of March, 1903, Congress passed an act, entitled "An act amending the Civil Code of Alaska, providing for the organization of private corporations, and for other purposes" (32 Stat. 944, c. 978), so amending the act of March 3, 1901, in regard to license moneys as to provide as follows:

"That all license moneys provided for by act of Congress approved March third, eighteen hundred and ninety-nine, entitled 'An act to define and punish crimes in the district of Alaska, and to provide a Code of Criminal Procedure for said district,' and any amendments thereto, required to be paid by any resident, person, or corporation for business carried on within the limits of any incorporated town, and collected by the clerk of the District Court, shall be paid over, by said clerk to the treasurer of such corporation, to be used for municipal and school purposes in such proportions as the court may order, but not more than fifty per centum, nor less than twenty-five per centum thereof shall be used for school purposes, the remainder thereof to be paid to the treasurer of the corporation for the support of the municipality, and the clerk of said court shall take said treasurer's receipt therefor in triplicate, one of

which receipts shall be forwarded to the Secretary of the Treasury, another to the Attorney General, and the other shall be retained by the clerk; provided, that fifty per centum of all license moneys provided for by said act of Congress approved March third, eighteen hundred and ninety-nine, and any amendments made thereto, that may hereafter be paid for business carried on outside incorporated towns in the district of Alaska, shall be covered into the treasury of the United States and set aside to be expended, so far as may be deemed necessary by the Secretary of the Interior, within his discretion and under his direction, for school purposes outside incorporated towns in said district of Alaska."

On the 28th day of April, 1904, Congress passed an act, entitled "An act to amend and codify the laws relating to municipal corporations in the district of Alaska" (33 Stat. 529, c. 1778), sections 7 and 8 of which are as follows:

"Sec. 7. That all license moneys collected by the clerk of the District Court from any person for any business, trade, or occupation carried on within the limits of any incorporated town in the district of Alaska pursuant to the provisions of an act entitled 'An act to define and punish crimes in the district of Alaska, and to provide a Code of Criminal Procedure for said district,' approved March third, eighteen hundred and ninety-nine, and all acts or parts of acts amendatory thereof, shall by said clerk be paid over to the treasurer of the town to be used for school and municipal purposes within the town. The clerk shall take a receipt for such money in triplicate, one of which receipts shall be filed with the Secretary of the Treasury, one with the Attorney General of the United States, and one shall be retained by the clerk.

"Sec. 8. That all acts and parts of acts inconsistent with this act are, to the extent of such inconsistency, hereby repealed, and the provisions of this act shall apply to and govern all municipal corporations heretofore created in the district of Alaska."

This act of April 28, 1904, in its fourth section, prescribed the powers the common council of incorporated towns therein provided for, as well as all municipal corporations theretofore created in Alaska (see section 8 of the act), shall have and exercise, including the power "to assess, levy and collect a general tax for school and municipal purposes, not to exceed two per centum of the assessed valuation upon all real and personal property, and to declare the same a lien upon such property, and to enforce the collection of such lien by foreclosure, levy, distress and sale," with certain exceptions not necessary to be mentioned; and including the power—

"to establish one or more school districts, to provide the same with suitable school houses, and to provide the necessary funds for the maintenance of schools, but such school districts and schools when established shall be under the supervision and control of a school board of three members, consisting of a director, a treasurer and a clerk, to be elected annually by the vote of all adults who are citizens of the United States, or who have declared their intention to become such, and who are residents of the school district."

On the 27th day of January, 1905, Congress passed the last act which bears upon the question now before us, which act was entitled "An act to provide for the construction and maintenance of roads, the establishment and maintenance of schools, and the care and support of insane persons in the district of Alaska, and for other purposes" (33 Stat. 616, c. 277), the fourth section of which, omitting those portions thereof having no pertinency here, is as follows:

"That the common council of the incorporated towns in such district shall have the power, and it shall be their duty in their respective towns, to estab-

lish school districts, to provide the same with suitable school houses, and to maintain public schools therein, and to provide the necessary funds for the schools; but such schools when established shall be under the supervision and control of a school board of three members, consisting of a director, a treasurer, and a clerk, to be elected annually by the votes of all adults who are citizens of the United States, or who have declared their intention to become such, and who are residents of the school district. * * * All money available for school purposes, except for the construction and equipment of school houses and the acquisition of sites for the same, shall be expended under the direction of said board, and the treasurer of said board shall be the custodian of said money, and he shall, before entering upon the duties of his office, give his bond with sufficient sureties to the school district in such sum as the common council may direct, and subject to its approval, but not less than twice the amount that may come into his hands as treasurer, conditioned that he will honestly and faithfully disburse and account for all money that may come into his hands as such treasurer. The said board shall have the power to hire and employ the necessary teachers, to provide for heating and lighting the school houses, and in general to do and perform everything necessary for the due maintenance of a proper school."

By the fifth section of the act of January 27, 1905, provision was made for the establishment of school districts outside of incorporated towns and for the maintenance thereof.

It will be readily seen from the foregoing provisions of the various acts of Congress upon the subject that by that of March 3, 1899, certain license taxes upon certain lines of business carried on in Alaska were authorized to be collected by the clerk of the District Court, who was required to pay them into the treasury of the United States; that the next act upon the subject, that of June 6, 1900, first provided for the organization of municipal corporations in Alaska, and for schools therein, and a school board therefor of three directors, with "exclusive supervision, management and control of the public schools and school property within said corporation," and a common council and treasurer of the municipality, with the further provision that the treasurer of the municipality should be ex officio treasurer of the school board, and that 50 per cent. of the license moneys provided for by the act of March 3, 1899, should be paid by the clerk of the District Court to the treasurer of the municipality, who should use it under the direction of the council for school purposes; that by its next act of March 3, 1901, Congress provided that, where it was shown to the satisfaction of the District Court that the whole amount received by the treasurer of the municipality from the clerk of the court is not required for school purposes, "the court may from time to time, by orders duly made and entered, with a statement of the facts upon which they are based, authorize the expenditure of the accumulated surplus, or any part thereof, for any of the municipal purposes enumerated" therein; that by its next act upon the subject, that of March 2, 1903, Congress provided that all of the license moneys collected by the clerk of the District Court should be paid over by him to the treasurer of the municipality, "to be used for municipal and school purposes in such proportions as the court may order, but not more than fifty per centum, nor less than twenty-five per centum thereof shall be used for school purposes, the remainder thereof to be paid to the treasurer of the corporation for the support of the municipality." But by its act of April 28, 1904, entitled "An act to amend and codify the laws relating to

municipal corporations in the district of Alaska," Congress so amended its previous provisions upon the subject as to declare that all license moneys collected by the clerk of the District Court from any other person for any business, trade, or occupation carried on within the limits of any incorporated town within the district of Alaska, pursuant to its previous acts, "shall by said clerk be paid over to the treasurer of the town, to be used for school and municipal purposes within the town," and by section 8 of its act of April 28, 1904, provided:

"That all acts and parts of acts inconsistent with this act are, to the extent of such inconsistency, hereby repealed, and the provisions of this act shall apply to and govern all municipal corporations heretofore created in the district of Alaska."

Congress thus took away from the District Court the power theretofore vested in it to apportion the license moneys, collected by its clerk and by him paid over to the treasurer of the town, to municipal and school purposes, and also eliminated the provision in the act of March 2, 1903, to the effect that not more than 50 per centum nor less than 25 per centum of such license moneys should be used for school purposes, requiring, without qualification, all of such moneys to be paid over by the clerk of the District Court to the treasurer of the municipality "to be used for school and municipal purposes"—obviously, we think, to be used for such purposes under the direction and control of the municipal authorities, and not under that of the court. And that such was the intent of Congress by its act of April 28, 1904, is further shown by the fact that, for the first time in its legislation in respect to Alaska, Congress, in the fourth section of its act of April 28, 1904, in prescribing the powers of the common council of incorporated towns therein provided for, as well as all other municipal corporations theretofore created in Alaska, gave such corporations the power to assess, levy, and collect a general tax for school as well as other municipal purposes, with certain exceptions, and with power "to establish one or more school districts, to provide the same with suitable school houses, and to provide the necessary funds for the maintenance of schools."

Under this power to levy a tax for school purposes, Congress manifestly conferred upon the common council of incorporated towns the right to supplement, if need be, the license moneys it required to be paid by the clerk of the District Court to the treasurer of the municipality "to be used for school and municipal purposes," by a general tax for school purposes. It results that it was not for the court below to determine "the proper amount to be apportioned for the use of the school board for the purpose of enabling the board to pay the indebtedness against the school district, and for the due maintenance of the Nome public schools for the ensuing school year," for all its previous authority in the premises was taken away by the provisions of the act of April 28, 1904, and that it erred in adjudging, as it did, that the council—

"set apart, apportion, and pay over to the treasurer of the Nome school board, for school purposes for the ensuing school year, the additional sum of $3,000

from the federal license moneys now in the hands of the clerk of this court, or hereafter to come into his hands as such clerk, and by him paid over to the common council of the town of Nome."

The judgment is accordingly reversed.

(173 Fed. 269.)

METROPOLITAN SECURITIES CO. v. LADD.

(Circuit Court of Appeals, Second Circuit. July 13, 1909.)

No. 290.

CONTRACTS (§ 164*)—CONSTRUCTION—CONTEMPORANEOUS CONTRACTS CONSTRUED TOGETHER.

A street railway company leased its entire system and property for a long term. A contract was subsequently made between them by which the lessee agreed to furnish to the lessor $8,000,000 in cash to make certain extensions and pay indebtedness, and the lessor agreed to issue its improvement notes for the same amount to defendant, a security company, with collateral security. By a contemporaneous agreement between the lessee and defendant the latter agreed that it would when required, on reasonable notice, and in any event before January 1, 1909, furnish to the lessee such sums as might be required by it to carry out its agreement with the lessor. A third agreement was made between defendant and a fourth corporation by which defendant was to deliver the notes and security received from the lessor to the other party, which was to supply the $8,000,000, to be raised by a sale of its own obligations, secured by collateral deposited with a trust company, in accordance with a fourth contract between them. The several contracts were fully performed, except that defendant paid over to the lessee only a part of the money, refusing on the lessee's insolvency to pay more. The several corporations, except the trust company, were practically controlled by the same persons, the fourth corporation, which in fact furnished the money owning 96 per cent. of the stock of defendant, and defendant the entire stock of the lessee. *Held*, that all the contracts must be construed together as one, and, so construed, the transaction was not a loan by defendant, but it simply acted as a conduit for the transfer of the securities and payment of the money to the lessee, and that, having received it for the purpose, and the contracts having been fully executed by all other parties, it had no concern with the solvency or insolvency of the lessee, whose receivers were entitled to recover the unpaid part of the money.

[Ed. Note.—For other cases, see Contracts, Cent. Dig. §§ 746–748; Dec. Dig. § 164.*]

In Error to the Circuit Court of the United States for the Southern District of New York.

Action by William W. Ladd, as receiver of the New York City Railway Company, against the Metropolitan Securities Company. Judgment for plaintiff, and defendant brings error. Affirmed.

On writ of error to review a judgment entered February 11, 1909, in the Circuit Court for the Southern District of New York in favor of the plaintiff for $5,271,582.54. The action was tried by the court, a jury trial being waived by written stipulation. The court made numerous findings of fact, those numbered 13, 15, 16, 17, 23, 25, 26, and 32 being duly excepted to by the defendant. The defendant also presented numerous proposed special findings which the court declined to adopt, the defendant reserving an exception to the refusal of the court to find those numbered 11, 15, 16, 17, 21, 24, 25, 28, 29, 30, and 33 to 41 inclusive. The defendant also presented 22 proposed con-

clusions of law which the court declined to affirm, except the one numbered 22, and the defendant reserved an exception to each refusal.

The action was originally brought by Messrs. Joline and Robinson, as receivers of the New York City Railway Company. The present plaintiff was appointed receiver in place of said Joline and Robinson on the 27th day of July, 1908, and was duly substituted as plaintiff by an order of the Circuit Court entered February 10, 1909.

The complaint, after reciting the appointment of the receivers of the New York City Railway Company and the authority to bring this suit, alleges that all the times therein mentioned the defendant, the New York City Railway Company, and the Metropolitan Street Railway Company were New York corporations, and that the latter on the 14th day of February, 1902, was operating as owner, lessee, and by means of subsidiary companies, practically the entire surface street railway system of the city of New York. That on the said 14th day of February, 1902, the Metropolitan Company leased its systems and lines to the New York City Company for the term of 999 years, and the City Company took possession and operated the same under the lease, and continued to do so until the appointment of the receivers by order made September 24, 1907.

The complaint alleges further that on the 22d day of May, 1907, the City Company entered into an agreement with the Metropolitan Company whereby the City Company promised that it would when required, on reasonable notice, and in any event before January 1, 1909, furnish the Metropolitan Company $8,000,000 in cash. The agreement further provided that the Metropolitan Company would forthwith issue and deliver to the Metropolitan Securities Company, the defendant herein, its three-year 5 per cent. improvement notes to the face value of $8,000,000, and for security would assign to the Securities Company all claims, notes, and accounts of every description which the Metropolitan Street Railway Company had at the date of said agreement or thereafter might have against any of its subsidiary companies. That the securities were assigned as provided in said agreement.

It is alleged further that on the same day (May 22d) the City Company entered into an agreement with the Securities Company whereby it agreed that the Securities Company would when required on reasonable notice, and in any event before January 1, 1909, furnish to the City Railway Company such sums as might be required by it to carry out said agreement between the Metropolitan Street Railway Company and the City Company. That this covenant upon the part of the Securities Company formed the consideration for the said agreement on the part of the City Company to make said payments to the Metropolitan Street Railway Company, and induced the making of the agreements to do so. Both of these contracts are in writing, and are set out in full in the opinion of the Circuit Judge, and are known as schedules A and B. They need not be repeated.

The complaint alleges further that the City Company and its receivers fully performed its agreement with the Metropolitan Company, and $8,000,000 has been paid and incurred pursuant to its terms, for which no consideration has been received except the promise of the defendant to repay said sum. That the Metropolitan Company has performed the agreement on its part with the City Company, and has delivered to the defendant prior to September, 1907, the full consideration for the defendant's said agreement to repay the sums paid by the City Company, to wit, the $8,000,000 of improvement notes of the Metropolitan Company, and as collateral thereto the notes of the Third Avenue Railroad Company, Twenty-Eighth and Twenty-Ninth Streets Crosstown Railroad Company, Twenty-Third Street Railroad Company, and Second Avenue Railroad Company, aggregating $8,148,209.91. That the defendant accepted the said notes, and has continued to hold the same for its own use. That the said payments to the Metropolitan Company were made at the instance of the Securities Company, and in reliance upon its agreement to repay the New York City Railway Company for such advances, no other consideration having been received by said City Company. That the Securities Company has paid only the sum of $3,036,000 to the City Company, and there is due a balance of $4,964,000. That the agreements heretofore mentioned were made to enable the Metropolitan Company to discharge a floating indebtedness and

make necessary improvements and changes of motive power necessitating the expenditure of $8,000,000.

Judgment is demanded for $4,964,000.

The answer admits the appointment of receivers of the New York City Railway Company, and that on the 14th of February, 1902, and for some time prior thereto, the Metropolitan Street Railway Company operated a large portion of the street surface railroads in the borough of Manhattan. It admits the execution of schedules A and B, the reception by it of certain papers purporting to be improvement notes of the Metropolitan Street Railway Company for the face amount of $8,000,000, and, as collateral thereto, paper writings purporting to be promissory notes of the companies as alleged in paragraph 7 of the complaint, and it admits the payment of $3,036,000 as therein alleged.

The answer puts in issue the other allegations of the complaint, and as an affirmative defense alleges the insolvency of the New York City Railway Company and of the Metropolitan Street Railway Company.

The opinions of the court below are reported sub nom. Joline v. Metropolitan Securities Co. (C. C.) 164 Fed. 144, 650.

Cravath, Henderson & De Gersdorff (De Lancey Nicoll and Richard Reid Rogers, of counsel), for plaintiff in error.

Joseph H. Choate, Arthur H. Masten, and Robert C. Beatty, for defendant in error.

Before COXE, Circuit Judge, and HOLT and HOUGH, District Judges.

PER CURIAM. It will be observed from an examination of the pleadings that few of the salient facts are disputed. These facts appear in the opinion of the Circuit Judge, and need not be restated. The question before us is one of law, depending largely upon the construction which is placed upon the second paragraph of schedule B. It will, therefore, be unnecessary to consider the defendant's exceptions in detail.

On the 22d day of May, 1907, the day on which schedule B was signed, an agreement between the Metropolitan Company and the City Railway Company was also executed, known as "Schedule A," by which, after reciting that the account between the parties had been stated and approved, it was agreed that "the City Company shall as and when required, on reasonable notice, and in any event before January 1, 1909, furnish the Metropolitan Company eight million dollars in cash."

Schedule A further provided that the Metropolitan Railway Company should forthwith issue to the Metropolitan Securities Company its improvement notes to the face amount of $8,000,000, and for the security of said notes the Railway Company should assign all claims, notes, and accounts "which it now has and in the future may have against any of its subsidiary companies."

So far, then, we have an admitted obligation of the City Company to furnish $8,000,000 to the Metropolitan Company, and an agreement by the latter to issue its improvement notes to that amount with collateral. Schedule B recites the making of schedule A, a copy of which is attached thereto. By the second paragraph of schedule B, the Securities Company agreed, on reasonable notice, to furnish to the City Company such sums as were required to carry out the agreement with the Metropolitan Company, viz., to "furnish the Metropolitan

Company eight million dollars in cash." The Securities Company also agreed to advance to the City Company such other sums as may be required by the City Company before January 1, 1909, against the issue of demand notes of the City Company therefor. This sentence, the second of paragraph 2, relates to an entirely separate and distinct obligation in no way connected with the first. No demand notes were issued for "such other sums," and therefore this provision of the agreement was never called into action.

The City Company assigned to the Securities Company all the shares of stock and securities set out in schedule A. On the same day, May 22, 1907, the Securities Company entered into an agreement with the Interborough-Metropolitan Company which recites by way of preamble that the Interborough Company is the owner of more than 96 per cent. of the capital stock of the Securities Company, which latter company is in need of certain moneys for corporate purposes. The agreement provides that the Interborough Company shall advance to the Securities Company prior to July 1, 1909, $15,000,000 in such amounts as the Securities Company may require; the latter agreeing to deliver to the former its demand notes for the said sum and certain other notes and stock as security therefor. On May 23, 1907, the Interborough-Metropolitan Company entered into an agreement with the Mercantile Trust Company whereby the latter agreed to certify as trustee the former's notes to the amount of $15,000,000.

In the endeavor to find a way through this maze of corporations, contracts, and obligations, it is well to remember that the Securities Company owned the entire capital stock of the City Company, that 96 per cent. of the stock of the Metropolitan Securities Company was held by the Interborough-Metropolitan Company, and that all of the railway companies connected with this controversy were controlled, practically, by the same individuals. There may have been a reason for involving the street railway system of New York in such an impenetrable snarl, but it has not been disclosed in the record. The project of operating and financing the street railway systems of New York during all the times in question, though protean in the facility with which it appeared in different forms and under different names, was the same familiar enterprise, and managed, with the exception of the Mercantile Trust Company, by the same group of men. In our opinion, the true view of the obligation between these parties can only be obtained by considering all the traction companies as being merely parts or administrative divisions of one complex concern, and all the separate contracts executed, in relation to obtaining $8,000,000 for the New York City Company, as being one contract, to be construed together. The Metropolitan Street Railway Company had leased all its properties to the New York City Company. The Interborough-Metropolitan Company, through its stock ownership, actually controlled the traction business, and, although the other companies still maintained a distinct corporate existence, and could make obligatory contracts with each other, they were, in fact, merely departments or branches of the business controlled by the Interborough Company. It was clearly the intent of the parties to the May, 1907, agreements to provide a fund for paying the debts of

the Metropolitan Railway Company and for necessary future construction, aggregating about $8,000,000, which sum the Securities Company undertook to furnish to the City Company absolutely and without condition. The language of schedule B in this regard is unambiguous. It provides that "the Securities Company shall * * * furnish to the City Company such sums as may be required by it to carry out" its agreement with the Metropolitan Company to pay $8,000,000.

When the various contracts of May 22 and May 23, 1907, were made, the situation was this: By the provisions of the lease between the Metropolitan Street Railway Company and the New York City Railway Company, whatever money was then needed for expenditures for permanent betterments upon the roads controlled by the Metropolitan Street Railway Company was to be raised by the Metropolitan Street Railway Company, by the issue of its own securities, and was to be furnished to the New York City Railway Company, and expended by it in making the necessary permanent betterments upon the property. The New York City Company had at that time expended over $2,000,000 of its own money for such betterments, for which it was entitled to reimbursement by the Metropolitan Street Railway Company, and it was proposed to make further similar expenditures for permanent betterments, amounting in the aggregate to $8,000,000. That being the situation, an arrangement was made for obtaining the $8,000,000 by the negotiation or sale of notes to be issued by the Interborough Company, certified by the Mercantile Trust Company, and secured by collateral deposited with the Trust Company. The arrangement made provided for the issue of $15,000,000 of such notes, if desired by the Interborough Company, $8,000,000 of which should be used to provide the $8,000,000 required for betterments by the Street Railway Company. To effect that arrangement four contracts were executed, one between the Metropolitan Street Railway Company and the New York City Company, one between the New York City Company and the Metropolitan Securities Company, one between the Metropolitan Securities Company and the Interborough-Metropolitan Company, and one between the Interborough-Metropolitan Company and the Mercantile Trust Company. These four contracts were made at the same time, were in pari materia, and are to be construed together as constituting, in fact, one contract. The substantial provisions of that contract which bear upon the questions in controversy in this case were that the Metropolitan Street Railway Company agreed to execute its notes for $8,000,000 payable to the Mercantile Trust Company, and to deliver them to the Metropolitan Securities Company, together with securities or obligations for more than $8,000,000 of various street railway companies whose properties were controlled by the Metropolitan Street Railway Company. Such notes and collateral were then to be delivered by the Metropolitan Securities Company to the Interborough-Metropolitan Company, and then by the Interborough-Metropolitan Company to the Mercantile Trust Company. The Metropolitan Securities Company was to issue its notes to the Interborough Company for $15,000,000, and the Interborough Company was to issue its own notes for $15,000,000, accompanied by the certificates of the Mercantile

Trust Company that such notes were adequately secured by collateral delivered to the Trust Company, by means of which issue of notes of the Interborough Company, secured by the collateral held by the Mercantile Trust Company as trustee, the actual funds were to be raised. Then it was agreed that the $8,000,000 so obtained should be paid by the Interborough Company to the Securities Company, and that the Securities Company should hold such sum, and pay it to the New York City Company whenever it was called upon for the money, and in any event before January 1, 1909. All this, except the payment of the money to the New York City Company, was done. The Metropolitan Street Railway Company issued its notes for $8,000,000, payable to the Mercantile Trust Company, and delivered them, together with the stipulated collateral security, to the Metropolitan Securities Company. That company immediately transferred them to the Interborough Company. That company immediately transferred them to the Mercantile Trust Company. The Interborough Company immediately paid to the Metropolitan Securities Company $8,000,000, and the Metropolitan Securities Company afterwards paid to the New York City Company, as called on from time to time, over $3,000,000; but after the appointment of the receivers the Securities Company refused to pay over the balance to the New York City Company, on the ground, which is its defense in this case, that the real existing arrangement was that the Metropolitan Securities Company had contracted to loan $8,000,000 to the New York City Company, and that the insolvency of the New York City Company released the Metropolitan Securities Company from the obligation to make further advances upon the loan. We do not think it strictly correct to say that the delivery of the notes and securities by the Metropolitan Street Railway Company to the Metropolitan Securities Company was a sale, although the transaction had many of the features of a sale. The Metropolitan Securities Company was nothing but an agent or conduit for the delivery of the notes and securities from the Metropolitan Street Railway Company to the Interborough Company, and for the transmission of the money received from the Interborough Company to the New York City Company. The Metropolitan Securities Company had no real interest in the notes or the collateral when it received them from the Metropolitan Street Railway Company. It had no right to retain them, or to use them for any purpose, and, in fact, there was no reason that we can see for going through the roundabout form of delivering them to the Metropolitan Securities Company at all. It would have been more to the point to have delivered them directly to the Interborough Company, or, still more directly, to the Mercantile Trust Company. So when the money was provided by the Interborough Company, there was no reason for going through the form of turning it over to the Metropolitan Securities Company. It might just as well have been paid directly to the New York City Company.

The obligation of the Metropolitan Securities Company, after it received the $8,000,000 from the Interborough Company, to pay it to the New York City Company, may, of course, be considered as a simple obligation under the contract between them. We think it may more properly be described as a contract obligation, fully executed

by one party, and upon which nothing remained to be done by the other but to pay over the money; or it may be regarded as the obligation of a mere depositary, or bailee, to turn over money which is held upon an express agreement to pay it to another, a proper action to recover which would be an action for money had and received.

But whatever would be an accurate description of the strict legal nature of the obligation between the Metropolitan Securities Company and the New York City Company, one thing seems absolutely clear, and that is that it was not a contract of loan. Nothing in the case indicates that the Metropolitan Securities Company was loaning the money to the New York City Company. No promise to repay was executed, no evidence of the loan was delivered, no time of repayment was fixed, no rate of interest was agreed upon, and none of the ordinary indicia of a loan, particularly a loan of such magnitude as $8,000,000, exists. But much weightier than the fact that all the ordinary evidences of a loan are wanting is the fact, shown by all the evidence and all the circumstances of the case, that nobody imagined at the time that the transaction was a loan, or had any analogy to a loan. The Metropolitan Street Railway Company had furnished the securities upon which the money was to be raised. They were in the shape of negotiable securities. They had been transferred for value, before maturity, to innocent purchasers in good faith, and no defense could be interposed to them. The money had been raised and deposited with the Metropolitan Securities Company, subject to the call of the New York City Company. It was just as though that amount had been deposited in a bank, subject to the checks of the New York City Company. It was intended to be expended in permanent betterments of the property of the street railway company, to provide for which the street railway company had parted with its securities for a like amount. The suggestion made now that this was a loan, that the New York City Company supposed, or that any of the parties concerned imagined, that the New York City Company, after it expended that $8,000,000, was at some future time to repay it in cash to the Metropolitan Securities Company, seems to us absolutely untenable.

There is no element of a loan about such a transaction; it was a simple promise to furnish the City Company $8,000,000. Suppose there had been a tripartite agreement between the Metropolitan, City, and Securities Companies providing that the City Company should pay the Metropolitan Company $8,000,000 and that the Securities Company should furnish the money to enable the City Company to make the payment—all upon sufficient consideration; in such circumstances, can there be a doubt as to the liability of the Securities Company? The balance which it is asked to pay over does not come out of its treasury; it had already received the amount, or security therefor. As before stated, the transaction by which the Metropolitan Company was to be supplied with $8,000,000 by the City Company was pursuant to a general plan as evidenced by agreements of May 22 and 23, 1907.

In consideration of the issue and delivery to the Securities Company by the Metropolitan Company of its improvement notes for the face amount of $8,000,000, the City Company agreed to furnish the Metropolitan Company $8,000,000 in cash, which the Securities Com-

pany promised to furnish to the City Company by a contemporaneous agreement.

Great weight is placed by the counsel for the Securities Company on what is called the "hypothecation clause" in the contract between the Metropolitan Street Railway Company and the New York City Railway Company. That contract provides for the delivery of the notes for $8,000,000 and of the collateral by the Metropolitan Street Railway Company to the Metropolitan Securities Company, and the hypothecation clause provides that the Securities Company shall have the right to pledge and hypothecate the notes and the collateral, and it is argued that this showed that the agreement between the New York City Company and the Metropolitan Securities Company was a contract for a loan, and not for a sale. But, in our opinion, the explanation of the insertion of this hypothecation clause in the contract is very simple. Strictly, it was unnecessary. The Metropolitan Securities Company, of course, had the right to transfer the notes and collateral to the Interborough Company, and the latter company, of course, had the right to hypothecate them as security with the Mercantile Trust Company. That was what they were made for, as fully appears in the recitals in the contracts. But so complicated had become the relations of these various traction companies, and their rights and liabilities as between each other, and so involved were the rights created by the four contracts executed between the various companies, forming the chain of this transaction, that ordinary business men, like the officers of the Mercantile Trust Company, or, indeed, their counsel, if the matter had been referred to counsel, would have had to make the same laborious examination of all the details of these contracts, and of the relations between the parties, which it has been necessary for the court to make in order to understand the comparatively simple question involved in this case. Under those circumstances, it was not improbable that the question might arise whether the Metropolitan Securities Company, or the Interborough Company, or both, had, in fact, the power to hypothecate the notes of the Metropolitan Street Railway Company, and the securities accompanying them. That being so, it was a matter of practical common sense to put a specific clause in the contract showing unmistakably that such a right existed, and accordingly there was inserted in the contract between the Metropolitan Street Railway Company and the Metropolitan Securities Company, and in the contract between the Metropolitan Securities Company and the International Company, a specific provision to the effect that each of those companies had that right of hypothecation. Such a provision did not create the right, but if afforded clear evidence that the right existed, and prevented the necessity of an elaborate investigation to discover whether there were any possible grounds on the part of anybody to deny that such a right existed. Such provisions are often put into contracts, and the fact that a contract contains such a provision is not necessarily of much weight in construing the meaning of the contract.

It is not necessary, in order to sustain the judgment, to hold that the notes were actually sold to the Securities Company, in view of the fact that the company received them for the express purpose of rais-

ing money on them pursuant to a general scheme which contemplated a definite agreement on the part of the Securities Company to supply the City Company with funds wherewith to fulfill its absolute obligation to the Metropolitan Company. The Metropolitan Company issued and delivered the notes, not in consideration of a promise from any one to hypothecate or sell them, but in consideration of a valid agreement to pay it $8,000,000 if delivery were made to the Securities Company. Although there may be a difference of opinion as to the technical name applicable to the transaction, we are unanimous in thinking that the liability of the defendant is fully established and that the question of nomenclature is negligible.

We concur with the Circuit Judge in his reasoning and conclusions as to the other questions discussed by him. If we are correct in our construction of the agreements, it is, of course, no defense that the party entitled to receive the money subsequently became insolvent.

The judgment is affirmed, with costs.

(173 Fed. 277.)

SAVELJICH et al. v. LYTLE LOGGING & MERCANTILE CO.

(Circuit Court of Appeals, Ninth Circuit. September 7, 1909.)

No. 1,676.

DEATH (§ 31*) — ACTION FOR WRONGFUL DEATH — CONSTRUCTION OF STATUTE — ACTION BY ALIENS.

Ballinger's Ann. Codes & St. Wash. § 4828 (Pierce's Code, § 256), which provides that, when the death of a person is caused by the wrongful act or neglect of another, an action for damages may be maintained for the benefit of his widow and children, as construed by the Supreme Court of the state, gives such right of action, although the widow and children are nonresident aliens.

[Ed. Note.—For other cases, see Death, Cent. Dig. § 37; Dec. Dig. § 31.*

Nonresident aliens as beneficiaries under death acts, see note to Mahoning Ore & Steel Co. v. Blomfelt, 91 C. C. A. 396.]

In Error to the Circuit Court of the United States for the Northern Division of the Western District of Washington.

This is an action at law, brought by the plaintiffs, Staka Radova Saveljich and her several minor children, subjects of the Prince of Montenegro, by their guardian ad litem, Vido Batrichevich, against the defendant, Lytle Logging & Mercantile Company, to recover damages for the death of her husband, Rade Saveljich, who was killed while employed as a laborer by the defendant and engaged in the work of grading, near Porter, Wash., with a scraper operated by means of an engine and cable. A guy rope attached to the scraper and running through a pulley or block gave way, causing the block to be thrown upon Saveljich, killing him instantly. An amended complaint, filed May 5, 1908 alleged, in substance, that defendant, Lytle Logging & Mercantile Company, was and is now a corporation duly organized and existing under and by virtue of the laws of the state of Washington; that Vido Batrichevich was the duly appointed, qualified, and acting guardian ad litem of Mise Saveljich, aged 13 years, Milena Saveljich, aged 3 years, Savo Saveljich, aged 11 years, and Janko Saveljich, aged 5 years, all of whom and their mother were subjects of the Prince of Montenegro; that Rade Saveljich was an able-bodied man, 32 years of age, capable of earning and actually earning $2.50 per day working in the employ of defendant as a common laborer; that on Feb-

ruary 3, 1907, Saveljich was engaged in grading near Porter, Wash., with a scraper operated by means of an engine and cable running through a pulley or block, the block being held in place by two guy ropes, one end of which was fastened to a hook on the pulley or block with an eye in the end of the guy rope, while the other end was fastened to a stump; that Saveljich was working within 10 feet of said cable, where he had been placed by the foreman of defendant, and while said apparatus was in a defective and dangerous condition and insufficient; that the foreman, knowing the dangerous position of Saveljich, and without giving him any warning whatsoever, caused said engine to start in order to move the scraper filled with dirt; that on account of the insufficient and dangerous condition of the apparatus one of the guy ropes gave way, throwing the pulley block upon Saveljich, killing him instantly; that at the time of the accident the apparatus was in a defective and dangerous condition, and was insufficient, in that the hook on said block or pulley to which said guy ropes were fastened was too small and was insufficiently fastened to said stump, all of which defendant knew, or had reason of knowing. Judgment was asked in the sum of $30,000. The defendant demurred to the amended complaint, on the ground, among others, that the plaintiff had no legal capacity to sue. The court sustained the demurrer, on the ground that the plaintiffs were nonresident aliens; and, the plaintiffs refusing to further amend their complaint, the court, on May 25, 1908, entered a judgment of dismissal. From this judgment the plaintiffs prosecute the present writ of error.

John C. Higgins, Calvin S. Hall, and Dallas V. Halverstadt, for plaintiffs in error.

F. S. Blattner, Bamford A. Robb, L. B. Da Ponte, and Blattner & Chester, for defendant in error.

Before GILBERT, ROSS, and MORROW, Circuit Judges.

MORROW, Circuit Judge (after stating the facts as above). Section 4828 of Ballinger's Annotated Codes & Statutes of the State of Washington (Pierce's Code, § 256) contains the following provision:

"When the death of a person is caused by the wrongful act or neglect of another his heirs or personal representatives may maintain an action for damages against the person causing the death. * * * In every such action the jury may give such damages, pecuniary or exemplary, as under all circumstances of the case may to them seem just."

In 1904 Judge Hanford, in the Circuit Court of the United States for the District of Washington, in the case of Roberts v. Great Northern Ry. Co., 161 Fed. 239, held that the statute of Washington above quoted could not be made the basis of an action where the widow and children are aliens and not within the state nor inhabitants thereof. The court followed the decision of the Supreme Court of Wisconsin in the case of McMillan v. Spider Lake S. & L. Co., 115 Wis. 332, 91 N. W. 979, 60 L. R. A. 589, 95 Am. St. Rep. 947, and stated that the attention of the court had not been directed to any decision by the Supreme Court of the state of Washington upon the subject. When judgment was entered in this case on May 25, 1908, no decision of the question had then been rendered by the Supreme Court of the state, and the Circuit Court followed its decision in Roberts v. Great Northern Ry. Co., supra. On November 18, 1908, the Supreme Court of Washington decided the case of Anustasakas v. International Contract Co., 51 Wash. 119, 98 Pac. 93, holding that nonresident aliens may maintain an action for wrongful death under the statute of that state for the benefit of the widow and children. The court refers to the

decisions of several states upon the subject and finds the weight of authority supports such an action under similar statutes. The construction given to a statute of a state by the highest judicial tribunal of such state is regarded as a part of the statute, and is as binding upon the courts of the United States as the text. Leffingwell v. Warren, 67 U. S. 599, 603, 17 L. Ed. 261; Oakes v. Mase, 165 U. S. 363, 364, 17 Sup. Ct. 345, 41 L. Ed. 746; Pacific Rolling Mills Co. v. James Street Const. Co., 68 Fed. 966, 969, 16 C. C. A. 68; Mahoning Ore & Steel Co. v. Blomfelt, 91 C. C. A. 390, 163 Fed. 827, 833; Fulco v. Schuylkill Stone Co., 94 C. C. A. 498, 169 Fed. 98, 100.

Judgment reversed, with instructions to overrule the demurrer.

NOTE BY THE COURT.—In Great Britain the question whether the representatives of a nonresident alien could maintain an action under the statute known as "Lord Campbell's Act" (St. 9 & 10 Vict. c. 93) was first answered in the negative by Darling, J., in Adam v. British & Foreign S. S. Co., [1898] 2 Q. B. 430, 67 L. J. Q. B. 844, 79 L. T. 31, the court holding that the statute was not for the benefit of aliens abroad; but subsequently the question was answered in the affirmative in Davidsson v. Hill, [1901] 2 K. B. 606, 70 L. J. K. B. 788, 85 L. T. 118, 49 W. R. 630, 9 Asp. M. C. 223, by Kennedy and Phillimore, JJ., the court holding that the act applied as well for the benefit of the representatives of a deceased foreigner as for that of a British subject. In Beven on Negligence in Law, vol. 1, p. 209, the author says:

> "A reference to the preamble and first section of Lord Campbell's act would possibly have averted the decision in Adam v. British & Foreign Steamship Co. The object of that act is there stated to be, not to confer a right, but to impose a liability on 'the wrongdoer' 'in every case'—that is, within the words of the enactment."

In this country whether a nonresident alien can maintain an action under statutes similar to the Lord Campbell act has been answered in the negative in two states: Pennsylvania: Deni v. Pennsylvania R. Co., 181 Pa. 525, 37 Atl. 558, 59 Am. St. Rep. 676; Maiorano v. Baltimore & Ohio R. Co., 216 Pa. 402, 65 Atl. 1077, 116 Am. St. Rep. 778; Zeiger v. Pennsylvania R. Co. (C. C.) 151 Fed. 348; Id., 158 Fed. 809, 86 C. C. A. 69; Fulco v. Schuylkill Stone Co., 94 C. C. A. 498, 169 Fed. 98. Wisconsin: McMillan v. Spider Lake S. & L. Co., 115 Wis. 332, 91 N. W. 979, 60 L. R. A. 589, 95 Am. St. Rep. 947. But the question has been answered in the affirmative in sixteen states and one territory, as follows: Colorado: Patek v. American Smelting & Refining Co., 154 Fed. 190, 83 C. C. A. 284; Ferrara v. Auric Mining Co., 43 Colo. 496, 95 Pac. 952, 17 L. R. A. (N. S.) 964. Delaware: Szymanski v. Blumenthal, 3 Pennewill, 558, 52 Atl. 347. Georgia: Augusta Railway Co. v. Glover, 92 Ga. 132, 18 S. E. 406. Illinois: Kellyville Coal Co. v. Petraytis, 195 Ill. 215, 63 N. E. 94, 88 Am. St. Rep. 191. Indiana: Cleveland, etc., Ry. Co. v. Osgood, 36 Ind. App. 34, 73 N. E. 285. Iowa: Romano v. Capital Brick & Pipe Co., 125 Iowa, 591, 101 N. W. 437, 68 L. R. A. 132, 106 Am. St. Rep. 323. Kansas: Atchison, etc., Co. v. Fajardo, 74 Kan. 314, 86 Pac. 301, 6 L. R. A. (N. S.) 681. Kentucky: Trotta's Adm'r v. Johnson, 28 Ky. Law Rep. 851, 121 Ky. 827, 90 S. W. 540.

Massachusetts: Mulhall v. Fallon, 176 Mass. 266, 57 N. E. 386, 54 L. R. A. 934, 79 Am. St. Rep. 309. Minnesota: Renlund v. Commodore Mining Co., 89 Minn. 41, 93 N. W. 1057, 99 Am. St. Rep. 534; Mahoning O. & S. Co. v. Blomfelt, 163 Fed. 827, 91 C. C. A. 390. Missouri: Philpott v. Mo. Pac. Ry. Co., 85 Mo. 164. New York: Alfson v. Bush Co., 182 N. Y. 393, 75 N. E. 230, 108 Am. St. Rep. 815. Ohio: Pittsburgh, etc., Co. v. Naylor, 73 Ohio St. 115, 76 N. E. 505, 3 L. R. A. (N. S.) 473, 112 Am. St. Rep. 701. Tennessee: Chesapeake, etc., R. Co. v. Higgins, 85 Tenn. 620, 4 S. W. 47. Virginia: Pocahontas Collieries Co. v. Ruskas' Adm'r, 104 Va. 278, 51 S. E. 449. Washington: Anustasakas v. International Contract Co., 51 Wash. 119, 98 Pac. 93. Arizona: Bonthron v. Phœnix, etc., Co., 8 Ariz. 129, 71 Pac. 941, 61 L. R. A. 563.

(173 Fed. 280.)

LOS ALAMITOS SUGAR CO. et al. v. CARROLL.†

(Circuit Court of Appeals, Ninth Circuit. October 4, 1909.)

No. 1,701.

1. PATENTS (§ 72*)—ANTICIPATION—PRIOR DEVICES.

A device which does not operate on the same principle as that of a patent cannot be an anticipation.

[Ed. Note.—For other cases, see Patents, Cent. Dig. § 90; Dec. Dig. § 72.*]

2. PATENTS (§ 72*)—"ANTICIPATION"—PRIOR DEVICES.

It is not sufficient to constitute anticipation that the devices relied upon might, by a process of modification, reorganization, or combination, be made to accomplish the function performed by the device of the patent.

[Ed. Note.—For other cases, see Patents, Cent. Dig. §§ 90, 91; Dec. Dig. § 72.*

For other definitions, see Words and Phrases, vol. 1, p. 411.]

3. PATENTS (§ 174*)—IMPROVEMENT PATENTS—OPERATIONS OF DEVICE.

A patent expressly for an improvement on the device of a prior patent to the same inventor should be read in connection with the first, and will not be declared void because, standing alone, it does not describe an operative apparatus.

[Ed. Note.—For other cases, see Patents, Dec. Dig. § 174.*]

4. PATENTS (§ 328*)—VALIDITY AND INFRINGEMENT—LOAD-DUMPING APPARATUS.

The Carroll patent No. 561,485, for a load-dumping apparatus, claims 1 and 2, which cover a combination of elements in an apparatus especially designed to dump wagon loads of beets, and which is highly successful in accomplishing such purpose in much less time than required by any previously known means, were not anticipated, although the elements of the combination were separately old, and disclose invention. Patent No. 595,236 to the same inventor for an improvement on the apparatus of the prior patent also *held* valid, and both *held* infringed.

[Ed. Note.—For other cases, see Patents, Dec. Dig. § 328.*]

5. PATENTS (§ 312*)—SUIT FOR INFRINGEMENT—LACHES.

The defense of laches to a suit for infringement of patents *held* not sustained by the evidence.

[Ed. Note.—For other cases, see Patents, Dec. Dig. § 312.*

Laches as defense in suits for infringement, see notes to Taylor v. Sawyer Spindle Co., 22 C. C. A. 211; Richardson v. D. M. Osborne & Co., 36 C. C. A. 613.]

---

† Rehearing denied.

Appeal from the Circuit Court of the United States for the Southern District of California.

Suit in equity by Timothy Carroll against the Los Alamitos Sugar Company and another. Decree for complainant, and defendants appeal. Affirmed.

Miller & White and Lawler, Allen, Van Dyke & Jutten, for appellants.

Frederick S. Lyon, for appellee.

Before GILBERT and ROSS, Circuit Judges, and HUNT, District Judge.

ROSS, Circuit Judge. This suit was brought by the appellee in the court below for the alleged infringement of certain letters patent issued to him, the first of which was for a load-dumping apparatus, numbered 561,485, and dated June 2, 1896, and the second of which was for alleged improvements therein, numbered 595,236, and dated December 7, 1897.

The complainant, who is the appellee here, alleged infringement of claims 1 and 2 of the first patent, and of claims 1, 6, and 7 of the second. The defendants denied any infringement, and also set up in defense anticipation and lack of invention, laches, and also that the second patent was void on the ground that it does not disclose an operative apparatus.

In this court the appellants moved, and the appellee consented to, the dismissal of the cause as to the appellant Clark, and an order to that effect was entered.

In the specification of the first patent Carroll said:

"In Southern California the raising and shipping of beets for manufacturing sugar requires the rapid unloading of large numbers of wagon loads of beets, for the reason that the beets must be weighed and sampled by the sugar manufacturers, and it is impracticable to unload except at the place where the sampling is done, because the samples must be taken at the time of unloading each load in order to get a fair average of the load. In order to handle these beets it has heretofore been customary to place a net in the wagonbed and to then load the beets upon the net, and at the place of unloading the net was lifted by a derrick and the load drawn out of the wagon and brought over the car, and one side of the net then released; but this system was not sufficiently rapid, and great inconvenience and delay resulted, it frequently occurring that 30 teamsters would have to leave their wagons loaded all night and wait their turn next morning to unload. One object of my invention is to avoid all this inconvenience and loss of time, and to provide means whereby a farm wagon loaded with beets can be dumped in a very short period of time. With my invention as high as 27 wagon loads of beets, weighing in the aggregate nearly 40 tons, have been dumped from one dump into railroad cars, thus loading 2 cars, in 30 minutes. The actual work of dumping a 4-horse wagon load of 5 tons can be done easily in half a minute. In practice I have found 30 seconds to be sufficient for dumping the load after the wagon has stopped in place on the dump platform. My invention relates more particularly to the appliances and combinations of parts by which I am enabled to so rapidly unload heavy and light wagons loaded with beets. It is very important that the apparatus shall work rapidly, that the team remain hitched to the wagon during the dumping, that the apparatus be so constructed and arranged that the wagon can be jolted, if required, to jar loose any beets that do not readily slide out of the wagon bed, and that the parts be so arranged that the wagon can be easily and quickly put into shape to be driven away as soon as the load is

dumped. A further and very important consideration is to so construct and arrange the apparatus as to avoid any injurious strain on the wagon, and a peculiar and valuable feature of my invention is that I dump the load sidewise and fasten the vehicle to the tilting support by a chain or other suitable tie extending between and fastened to the tilting support and the bed of the vehicle. By this feature I make it possible to rapidly dump the load and not rack the wagon. In fact, by reason of this arrangement, the operation of dumping a load from a wagon does not rack or strain the vehicle in any part, except that strain comes upon that part of the bed to which the chain is fastened, and that part of the bed can easily be made strong enough to withstand the strain. No severe strain comes on the running gear, and this is of great importance. So far as I am aware, in all other appliances proposed for dumping wagons the vehicle is to be held by the running gear, and such appliances are not adapted for the work which my apparatus does. It is an object of my invention to accomplish the desired work of unloading wagon loads of beets as above stated, and to do it without straining or racking the wagon. This I have fully accomplished by my new invention. My invention is also applicable for dumping car loads of beets, and is also adapted for dumping from cars, wagons, and other vehicles bulk loads, such as coal, corn, etc., in loading vessels and for other purposes. My invention comprises the combination of a tilting vehicle support for the loaded vehicle, pivoted longitudinally to tilt sidewise, a longitudinal axis upon which the vehicle support is pivoted, means fastened to the tilting support and to the bed of the vehicle for holding the vehicle on the vehicle support, a lever for tilting the vehicle support sidewise and returning it to its horizontal position, a team support at the front of the vehicle support, on which the team can stand hitched to the vehicle while it is dumping, and a stop arranged to stop the tilting support on a slant and prevent it from tilting far enough to materially interfere with the team hitched to the vehicle. It also includes the vehicle support and various parts and combinations of parts hereinafter more fully specified. My invention also comprises the combination of a vehicle support arranged to tilt sidewise, a vehicle having a bed provided with a hinged side, and adapted and arranged to allow its load to be dumped off sidewise, and means extending between and fastened to the tilting support and the vehicle bed for holding the vehicle on the vehicle support when it is tilted, a lever fastened to and projecting from the side of the tilting support opposite that toward which the support tilts, and the stop arranged to stop the support when it has tipped sufficiently to cause the load to slide off sidewise. This is applicable either for railway cars, wagons, sleds, or any vehicle having a bed from which a load can slide sidewise when the vehicle is tipped. A distinctive feature of my invention as applied to wagons is the hinged side of the bed arranged wholly above the wheels and the dumping of the vehicle sidewise and stopping the tilting support on an incline, and thus dumping a large load without the necessity of unhitching the team, for by this means I avoid all the necessity of backing and of all other slow or complicated ways or means for dumping the load, which are necessary and which consume time in the case of wagons that dump endwise. By tilting the wagon sidewise I have made it much easier, quicker, and less expensive to unload the loads than is possible by any other means heretofore known. The driver of the team can drive across the tilting support and stop with his team upon the team support, and the dumpman can then dump the load while the team is hitched thereto, and the teamster can then drive on at once, so that there is but little stoppage of the team to dump the load. In carrying out my invention for dumping a wagon load of beets I raise the wagon bed above the wheels or arch the floor over the hind wheels, and I provide the wagon bed with a drop side, and provide such drop side wholly above the wheels with supports to hold it extended from the bed when dropped, so that the drop side serves as an apron to shoot the load onto the stationary apron which is provided at the side of the dump to shoot the load into the car."

The applicant then set out drawings illustrating the alleged invention, with specific descriptions thereof, and made five claims, the first and second of which are as follows:

"(1) The combination of a vehicle support arranged to tilt sidewise; means for tilting the support and returning it to a level position; a stop arranged to stop the support on a slant; a vehicle having a bed provided with a drop side wholly above the wheels and adapted to allow its load to be dumped off sidewise; means extending between and fastened to the tilting support and the vehicle bed for holding the vehicle on the vehicle support when it is tilted; a latch for holding the drop side in place and adapted to be released when the wagon is tilted; and means for supporting the drop side when it is dropped.

"(2) The combination of a vehicle support arranged to tilt sidewise; means for tilting the support and returning it to a level position; a stop arranged to stop the support on a slant; a vehicle having its bed adapted to allow its load to be dumped off sidewise; means extending between and fastened to the tilting support and the vehicle bed for holding the vehicle on the vehicle support when it is tilted; and a team holding support arranged at the front end of the tilting vehicle support and independent thereof, and adapted to allow the team to stand thereon hitched to the vehicle while the vehicle is being dumped."

It is manifest, we think, that these claims are limited to the dumping of wagons; and it is so conceded by the counsel for the appellee. The great usefulness of the appellee's apparatus cannot be doubted, for the importance and magnitude of the sugar-beet industry is not only a matter of common knowledge, but is also shown by the evidence, which further shows that prior to it the beets were unloaded from wagons either by means of forks and shovels, or by nets first placed in the wagons upon which the beets were loaded, and then unloaded at the desired place by means of hooks, ropes, chains, and whims operated by horses, all of which processes were more or less slow and expensive. Carroll's conception included the novel idea not only of dumping the wagons without unhitching the horses, thereby materially saving time and labor, but also the use of a part of the wagon as a part of the dumping apparatus. The conception was decidedly novel and valuable. While none of the elements employed by him were new, and while there was nothing new in the mere idea of dumping loads from cars, wagons, and other vehicles by tilting the vehicle sidewise and thereby causing its load to slide out by gravity, there is nothing in the record tending to show that anybody else had ever before thought of so unloading a wagon while the horses remained hitched to it, nor of the novel, expeditious, and highly successful manner employed by Carroll. The evidence is abundant, and without contradiction, to the effect that with Carroll's apparatus loads are readily dumped in 30 seconds, as against from 10 to 20 minutes by even the net and whim process, to say nothing of unloading with shovels or forks. In sustaining a patent for improvement in looms for weaving pile fabrics, consisting of such a new combination of known devices as to give a loom the capacity of weaving 50 yards of carpet a day when before it could only weave 40, the Supreme Court said, in the course of its opinion in Loom Company v. Higgins, 105 U. S. 580, 591 (26 L. Ed. 1177):

"It may be laid down as a general rule, though perhaps not an invariable one, that if a new combination and arrangement of known elements produce a new and beneficial result, never attained before, it is evidence of invention. It was certainly a new and useful result to make a loom produce 50 yards a day when it never before had produced more than 40; and we think that the combination of elements by which this was effected, even if those elements were separately known before, was invention sufficient to form the basis of a patent."

Beet wagons are necessarily heavy and stout, although of variable capacity, usually carrying, according to the evidence, from 4 to 7 tons at a load. The great desideratum was to shorten the time required for the unloading of the wagons, and thereby, incidentally, to save cost. The successful carrying out of the idea necessarily involved the safety of the vehicle as well as of the team attached thereto. Carroll's conception was to dump the loads from the wagons without unhitching the horses, so that the teams might at once go for another load; and to accomplish this without the use of power. He seems to have so combined old elements as to produce the desired result without the use of other power than the coacting of the various parts. He provided a raised platform of a height sufficient for the dumping of the beets from the wagon into the car or bin below, with an upward approach for the driving of the team with the loaded wagon onto the platform, and a descending roadway for the departure of the team with the empty wagon after the discharge of the load. That portion of the platform on which the wagon rests while the load is being dumped was so arranged as to tilt, while the portion upon which the horses stand during the tilting process remains fixed. That portion of the platform on which the wagon rests while the load is being dumped was so arranged as not only to tilt, but to stop tilting at such an angle as to discharge its loads without interfering with the position of the wagon itself or of the horses, and so that the wagon might be brought back into position to be driven away, and the apparatus brought into position for the receipt and discharge of the next succeeding loaded wagon—one of the functions of the stop being to give the load a jolt so as to insure its complete dumping. The tilting platform was so counterbalanced that the weight of the load would automatically carry the platform and load down, and when the load was discharged the counterbalance would automatically bring the platform back to its horizontal position. The wagon bed was so arranged as to permit all the beets to slide out of it when the proper angle in the tilting process was reached, and in order to prevent any of the beets during that process from rolling onto the surface of the tilting platform or underneath the dump instead of into the car or bin, as the case might be, the wagon bed was provided with a drop side wholly above the wheels to serve as an apron to shoot the load sidewise into the car or bin. Chains were provided extending from the tilting platform to the wagon body for holding it on the platform when tilted; a latch for holding the drop side of the wagon up during the loading of the beets and their hauling to the dumping apparatus and adapted to be released when the wagon load is on the platform and the dumping operation is to take place. The record shows that the various parts of Carroll's device were so interrelated and so coacted as to bring about the desired result in an eminently successful and satisfactory manner, and we see nothing in the record to show that any other device or apparatus ever before operated upon the same principle in accomplishing the same or a similar result. A device which does not operate on the same principle cannot be an anticipation. Western Electric Company v. Home Telephone Company (C. C.) 85 Fed. 649; Dederick v. Cassell (C. C.) 9 Fed. 506; Pattee v. Moline Plow Company (C. C.) 9 Fed. 821; Fuller v. Yentzer,

94 U. S. 288, 24 L. Ed. 103; Topliff v. Topliff, 145 U. S. 156, 12 Sup. Ct. 825, 36 L. Ed. 658; Robinson on Patents, vol. 1, § 282; Walker on Patents (4th Ed.) § 62.

We do not think it necessary to refer specifically to the large number of patents set up as anticipatory. The one apparently most relied upon is that issued to Chisholm, which was for "certain new and useful improvements in the mode of dumping railroad cars." There the cars to be dumped were placed on a railroad track pivoted longitudinally to a platform arranged to tilt sidewise in either direction, with a supplemental rail so provided as that, when the platform is titled, the inside of the flange of the upper wheel will press against it and release the strain from the flange of the lower wheel, the means for which tilting consisting of a windlass and a chain attached to the sides of the platform—the car having hinged sides arranged to be lifted upward. The sides of the car were also connected by chains with the sides of the tilting platform, so as to prevent the car from falling off the tracks when it was tilted sidewise, and posts were placed at the side of the track against which the car strikes when tilted, and which stop it. Expert witnesses for the respective parties—Boyd and Bates—seem to agree in their opinion that the principle of operation of the Chisholm device is different from that of Carroll, and, without going into details, we think it sufficient to say that the Chisholm patent does not anticipate all of the elements found in the claims of the Carroll patent hereinbefore set out, and that it is not capable of being operated or used in the manner in which Carroll's device was intended to be operated and used. Nor do any of the other patents relied upon provide a complete dumping apparatus which will operate upon the principle of Carroll's. It is not sufficient to constitute anticipation that the devices relied upon might, by a process of modification, reorganization, or combination with each other, be made to accomplish the function performed by the device of the patent sued on. Authorities supra.

The second patent issued to Carroll was for improvements to the apparatus patented to him by his first patent, consisting of a wheel-holding device for preventing the slipping of the vehicle on the tilting platform while being tilted, and consequent injury to the wagon. It was thus described in the specification:

"My invention includes in a dumping apparatus for dumping a vehicle sidewise a holder carried by the tilting vehicle-supporting platform at a height to engage the hubs or ends of the axles of the vehicle, and means for moving the holder to and from the hubs or axle ends, so that when the vehicle is moved onto the tilting platform the holder can be moved against the hubs or axle ends on the side toward which the platform tilts, and then when the platform is tilted the sidewise strain is borne by the axles, and lateral movement of the vehicle is prevented. Then, when the vehicle has been emptied and returned to upright position, the holder can be moved away from the hubs or axles ready for another vehicle. I have found by practical tests that this holder, carried by the tilting vehicle-supporting platform and brought against the ends of the axle or against the hubs of the wheel, is perfectly effective for holding the vehicle during the dumping process, and this application of the holder is far superior to holders which apply against the bed of the vehicle to support the bed, for the reason that the movement of the holder into its supporting position and out of the path of the vehicle is much less with wagons than is necessary where the holder is made to engage the vehicle bed, and the holder

is brought closer to the tilting platform and therefore can easily be given the required strength without being made cumbersome, and is nowise in the way of the dumping load, but is entirely below the vehicle bed and the path of the load as it passes out of the vehicle."

The inventor further said in the specification:

"I have set forth the best form in which I propose to carry out my invention, but I do not limit myself to the exact form shown, as it is obvious various modifications can be made without departing from the spirit of my invention."

We think, as did the Patent Office, that the second patent should be read in connection with the first, and that, as so read, it is not, as contended by the appellant, void on the ground that it does not describe an operative apparatus.

The court below found infringement upon the part of the appellant, and we think the evidence in the cause sustains that conclusion. The testimony of the witnesses Francis M. Townsend, Howard E. Powell, William N. Olmsted, and L. G. Bodine strongly supports it, and it also finds support in the fact that the evidence shows that the manager and the constructor of the appellant's factory knew of the Carroll apparatus, discussed it, and that its builder, Edward F. Dyer, before building the appellant's dumping device, several times examined that of Carroll, and made at least some notes and drawings of it. We extract from the testimony of the witness De Voe:

"Q. Who was the general superintendent for the erection of the Los Alamitos Sugar Company's plant and dump? A. Mr. E. F. Dyer. Q. Did you at any time have any talk with Mr. E. F. Dyer with regard to the Carroll dump which was erected at Anaheim? A. I did. Q. State the circumstances of such conversation. A. I was filling the foundation for the sugar house, and Mr. Dyer came over and asked me what I knew about the construction of the dump over at Anaheim. I told him I didn't know much about how it was constructed, but the man who was working for me, with me, Mr. Hiss, had assisted in building it and run it for a couple of years, and could tell him more than I could. Q. Prior to this conversation had there been any dump erected at the Los Alamitos Sugar Factory? A. There had not. Q. State whether or not you knew whether Mr. Edward F. Dyer went over to Anaheim in 1897 to examine the Carroll dump. A. He did. Q. How do you know he did? A. He hired me to take him there. Q. Do you know of your own knowledge whether Mr. Edward F. Dyer made any examination of the Carroll dump at Anaheim? A. I do. Q. What did he do? A. He went under the dump and looked at it; had a shingle, I think, with a paper on it, and made some drawings. Q. Did you have any conversation with him at that time? A. I did, a few minutes after that. Q. What was it? A. We left the dump and started up town, and I laughed at him and asked him if he was going to steal the Irishman's dump. He said he didn't know as there was anything to steal; he had ideas of his own."

The witness Hiss testified, among other things, as follows:

"Q. Are you acquainted with Edward F. Dyer? A. Yes, sir. Q. Do you know what connection he had in 1896 with the Los Alamitos Sugar Company? A. Yes, sir. Q. What was it? A. He had charge of the building of their factory, erecting the factory at Los Alamitos. Q. Did you have any conversation with him during the year 1896? A. Yes, sir. Q. State where and when and what that conversation was about. A. Why, he come there to the dump where I was at work, and there wasn't any teams there just at the time, and he asked me if I had any objection to him looking over the dump and taking some measurements, and I told him I didn't. So I went down off the dump with him and helped him to take some measurements, which he noted down in a book, or a shingle—I can't remember exactly which. He had something,

either a shingle or a book, which he made some datas on, and, before we got through with the measurements that he wanted to take there was some teams come up to the dump and I had to go up to attend to my duties, and I paid no more attention to just how long he was there. He was there 15 or 20 minutes, around the dump. Q. Did you have any conversation with him in regard to beet-dumping apparatus? A. Yes, sir. Q. What was it? A. Well, he asked me what I thought would be the most advisable plan for the factory at Los Alamitos, the net or a dump, and I told him by all means the dump. Q. What dump were you and Mr. Dyer referring to in that conversation? A. Well, the Carroll dump was the only one that was in existence that I knowed anything about at that time. Q. Did you ever have any conversation with Mr. Edward F. Dyer at Alamitos in regard to dumps? A. Yes, sir. Q. What was that? A. Well, I was helping to do some grading work there, and of course he knew that I had a great deal of experience in the dumps and helping to build the Carroll dump, and he asked me quite a number of different questions in regards to the width of the dump and the bins. He also knows I have had experience in Chino. And had several conversations in general which I cannot say exactly what the—word for word what they was, but it was generally in regards to the dump. I helped to do the grading there at the factory in the fall of 1896. Q. That was prior or after the dump was erected at the Los Alamitos Sugar Factory? A. That was before the dump was erected."

We cannot see that the court below erred in ruling against the appellant's plea of laches. No question in respect to profits or damages is involved on this appeal, the question of the appellee's right to the injunction awarded only being involved. The record shows not only that the contractor employed to build the appellant's dumping apparatus made several examinations of that of Carroll, taking some notes and drawings thereof before undertaking to construct the appellant's device, but that the manager of the appellant company had also a talk with Carroll in respect to the latter's apparatus, and that the manager, on the 12th of June, 1897, was notified in writing by Carroll of the issuance to him of his letters patent, and was expressly warned against infringing upon them. Carroll also testified that prior to the commencement of the suit he had a conversation with the manager of the appellant company on the street in Los Angeles, in which, said the witness:

"I told him that he had infringed on my patent, and he told me that he would be willing to pay me a nominal sum. I told him no, I wouldn't accept a nominal sum; that he could have it at a royalty at a cent per ton. He said if I wouldn't give it to him at a nominal sum he would take it. I told him positively, 'If you will take the dump and put it away from me, you will do it over my dead body. I will defend myself.' "

The record also shows that Carroll employed an attorney to bring suit against the appellant, for a contingent fee, that the matter was in the attorney's hands for a good while, and that the attorney finally died without bringing the suit, and that subsequently, when Carroll got sufficient money to commence action, he instituted the present suit.

Upon the record we do not think that it can be fairly said that there was any acquiescence upon the part of the appellee in the appellant's infringement, or that the circumstances are such as in equity bar the action.

The judgment is affirmed.

(173 Fed. 899.)

ARKANSAS BROKERAGE CO. et al. v. DUNN & POWELL, Inc.†

(Circuit Court of Appeals, Eighth Circuit. October 25, 1909.)

No. 2,916.

MONOPOLIES (§ 17*)—COMBINATIONS IN RESTRAINT OF INTERSTATE COMMERCE—COMBINATION PROHIBITED.

The organization by a number of mercantile jobbers located in the same city of a brokerage company, of which they owned the stock, and the purchase of merchandise required by them from manufacturers and jobbers in other states through such company, instead of through other brokers previously patronized, although there was no agreement binding them to do so, and the use of their influence to extend its business, did not constitute a combination or conspiracy in restraint of interstate trade or commerce, or to monopolize the same, in violation of the Sherman anti-trust act (Act July 2, 1890, c. 647, §§ 1, 2, 26 Stat. 209 [U. S. Comp. St. 1901, p. 3200]), but was a legitimate and lawful business enterprise.

[Ed. Note.—For other cases, see Monopolies, Dec. Dig. § 17.*]

In Error to the Circuit Court of the United States for the Eastern District of Arkansas.

Action by Dunn & Powell, Incorporated, against the Arkansas Brokerage Company and others. Judgment for plaintiff, and defendants bring error. Reversed.

Charles T. Coleman and W. T. Wooldridge (Frank G. Bridges, N. J. Gannt, Jr., George W. Murphy, and W. M. Lewis, on the brief), for plaintiffs in error.

J. W. House (M. House, on the brief), for defendant in error.

Before ADAMS, Circuit Judge, and RINER and AMIDON, District Judges.

ADAMS, Circuit Judge This was an action at law to enforce liability for threefold damages created by the seventh section of the anti-trust act (Act July 2, 1890, c. 647, 26 Stat. 210 [U. S. Comp. St. 1901, p. 3202]). Dunn & Powell, a corporation engaged in the merchandise brokerage and commission business, with its chief office in Little Rock and a branch office in Pine Bluff, Ark., charged the defendants the Arkansas Brokerage Company and five other domestic corporations doing business in Pine Bluff, together with two foreign corporations doing business in other states, with entering into a combination and conspiracy in restraint of trade and commerce among the states, and with monopolizing such trade and commerce, in violation of sections 1 and 2 of that act, and thereby injuring the plaintiff's business. The facts disclosed by the pleadings and proof are substantially these:

Plaintiff had been for many years prior to 1906 conducting a lucrative brokerage business in Pine Bluff, by negotiating sales of merchandise between manufacturers and wholesale dealers of other states and jobbers doing business in that region, and had built up in its branch office at that place a profitable business. In the year 1906 the five domestic corporations, constituting substantially all the jobbers in Pine Bluff, concluded to organize and did organize a corporation to do their own brokerage business, as well as that of any others which it might

† Rehearing denied December 4, 1909.

secure. Each of them took and paid for two shares of its capital stock, which they caused to be issued to one of their officers or members as their representatives, and this constituted all of its stock, excepting two shares, which were sold to one Russell, who was chosen to be manager of the new corporation. Practically speaking, therefore, the wholesale business houses of Pine Bluff organized, owned, and operated the new corporation, which was named the Arkansas Brokerage Company, the main defendant herein. The other defendants were the five domestic corporations and two manufacturing corporations of other states, all of whom were alleged to be parties with the new brokerage company to the combination and conspiracy. While there was no agreement or understanding that the defendants the Pine Bluff jobbers should cease dealing with the plaintiff, they naturally enough preferred to deal and did deal with the brokerage company after its organization, and gave preference to it in the conduct of their business. There is evidence that those jobbers would not purchase through the plaintiff's agency, unless it would quote prices sufficiently low to neutralize the advantages they would secure by making their purchases through their own agency. The fact also appears that some foreign manufacturers, deciding that their business interests would be better served thereby, ceased to employ plaintiff, and voluntarily placed their accounts with the brokerage company. There was such a failure, however, to connect the foreign corporations which were made defendants to this suit in any improper, unfair, or unlawful way with the other and main defendants that the court at the close of the case directed a verdict in their favor, and no complaint is made of that action by the plaintiff.

While the bill of complaint and argument of plaintiff's counsel abound in repeated and diversely stated charges of confederacy, conspiracy, and unlawful contrivances to bring about the destruction of plaintiff's business and to appropriate it by the defendants, the proof, as we gather it from a patient and careful reading of the record, discloses but few actual and material facts. The five jobbers undoubtedly conceived a purpose to save the brokerage charges, which they had before then been required to pay, by negotiating their purchases through their own agency, and at the same time inaugurate and conduct another branch of business. By reason of their advantageous situation as jobbers who furnished a large part of the brokerage business of Pine Bluff, and by dint of business sagacity and industry, their new brokerage company was able to outstrip most of its competitors, including the plaintiff, and as a result the latter soon abandoned its branch office in Pine Bluff and ceased doing business there. There is little, if any, competent evidence of unfair competition by the brokerage company, unless it be in the fact that it secured the trade of its own stockholders and availed itself of their valuable influence for the extension and success of its business. To pronounce such action unfair and unlawful would disrupt many existing business corporations and effectually prevent the organization of any more. It would contravene one, if not the chief, reason for their creation or existence.

The contention of the plaintiff is therefore reduced to this: That the defendant jobbers wronged the plaintiff by arranging to do for

themselves what they had formerly employed it to do for them, and that the brokerage company wronged the plaintiff by availing itself of all its opportunities and favorable conditions for successful competition in a branch of business legitimately open to all comers. We agree fully with certain propositions of law urged by plaintiff's learned counsel in support of their contentions in this case, namely: (1) That the anti-trust act denounces as illegal any contract, combination, or conspiracy of whatever form or nature which directly or necessarily operates to restrain or obstruct the free flow of commerce between the states, and that this denunciation includes contracts, combinations, or conspiracies to restrain the liberty of a trader in such commerce to engage or continue therein. Loewe v. Lawlor, 208 U. S. 274, 28 Sup. Ct. 301, 52 L. Ed. 488, and cases cited. (2) That any such contract, combination, or conspiracy which directly restrains the purchase, sale, or exchange of manufactured commodities among the several states is illegal. Addyston Pipe and Steel Co. v. United States, 175 U. S. 211, 20 Sup. Ct. 96, 44 L. Ed. 136. (3) That the destruction, restriction, or stifling of free competition in trade and commerce among the states constitutes a restraint of that trade, and is within the inhibition of the statute. Northern Securities Co. v. United States, 193 U. S. 197, 24 Sup. Ct. 436, 48 L. Ed. 679. (4) That a broker, acting for individuals or firms doing business in one state, when soliciting or taking orders for the sale and delivery of their merchandise to jobbers or dealers located in other states, is in so doing engaged in interstate commerce. Robbins v. Shelby Taxing District, 120 U. S. 489, 7 Sup. Ct. 592, 30 L. Ed. 694; Asher v. Texas, 128 U. S. 129, 9 Sup. Ct. 1, 32 L. Ed. 368.

But it is not perceived how the principles so invoked apply to the facts of this case or control its decision. The organization of the brokerage company as a competitor in business open to all had no natural tendency to directly or necessarily restrain commerce between the states, and the proof fails to show that it actually did restrain, lessen, or in any way stifle its free flow. The volume of that commerce, after as well as before the organization of the brokerage company, was determined by the fixed economic laws of demand and supply. The whole field was open to competition, and while the plaintiff, whose chief place of business was elsewhere, and one other broker in Pine Bluff, soon abandoned it, others operating there and in that vicinity remained in active competition, and without doubt all together were able and zealously disposed to keep the wheels of commerce as active as the demand for foreign merchandise required. Any one who had been in the business before could remain in it, and any one who wished to enter it afterwards could freely do so; but they had necessarily to compete with others, including the brokerage company, with whatever advantages they possessed for conducting a prosperous business. The fortuitous circumstance that the brokerage company had five important jobbers in the city so situated as to give it a preference arose from strictly legitimate relations. No one can deny that the jobbers had a right to organize a corporation to do their own brokerage business, as well as that of others. The law gave them that right, and they availed themselves of its provisions for that purpose. It cannot be doubted that

the five jobbers could have given their brokerage business to any broker on terms to be agreed upon, and it seems equally clear that by participating in the organization and ownership of the brokerage company they did no more than this, if indeed as much; for there was no obligation, express or implied, requiring them to deal with the brokerage company, except and so far only as their best interests from time to time dictated.

The mere fact that the broker, while engaged in negotiating sales of merchandise between an owner in one state and a jobber or consumer in another, is engaged in a species of interstate commerce, is quite unimportant, provided the business be done in a lawful manner. It becomes unlawful only when it is so done as to directly and substantially restrain that commerce or stifle its free flow. The proof, in our opinion, affords no warrant for a finding that any such consequences actually flowed, or had a natural tendency to flow, from the organization complained of in this case. The principles announced in the two cases of Hopkins v. United States, 171 U. S. 578, 19 Sup. Ct. 40, 43 L. Ed. 290, and Anderson v. United States, 171 U. S. 604, 19 Sup. Ct. 50, 43, L. Ed. 300, fully sustain the conclusions we have reached in this case. In the latter case the court said:

"It has already been stated, in the Hopkins Case above mentioned, that in order to come within the provisions of the statute the direct effect of an agreement or combination must be in restraint of that trade or commerce which is among the several states or with foreign nations. Where the subject-matter of the agreement does not directly relate to, act upon, and embrace interstate commerce, and where the undisputed facts clearly show that the purpose of the agreement was not to regulate, obstruct, or restrain that commerce, but that it was entered into with the object of properly and fairly regulating the transaction of the business in which the parties to the agreement were engaged, such agreement will be upheld as not within the statute, where it can be seen that the character and terms of the agreement are well calculated to attain the purpose for which it was formed, and where the effect of its formation and enforcement upon interstate trade or commerce is in any event but indirect and incidental, and not its purpose or object."

In Field v. Barber Asphalt Co., 194 U. S. 618, 24 Sup. Ct. 784, 48 L. Ed. 1142, the court said:

"In this day of multiplied means of intercourse between the states, there is scarcely any contract which cannot in a limited or a remote degree be said to affect interstate commerce. But it is only direct interference with the freedom of such commerce that brings the case within the exclusive domain of federal legislation."

This court, in Phillips v. Iola Portland Cement Co., 125 Fed. 593, 61 C. C. A. 19, said:

"This act of Congress [anti-trust act] must have a reasonable construction. It was not its purpose to prohibit or to render illegal the ordinary contracts or combinations of manufacturers, merchants, and traders, or the usual devices to which they resort to promote the success of their business to enhance their trade, and to make their occupations gainful, so long as those combinations and devices do not necessarily have a direct and substantial effect to restrict competition in commerce among the states."

See, also, Whitwell v. Continental Tobacco Co., 125 Fed. 454, 60 C. C. A. 290, 64 L. R. A. 689.

From these cases, and many others to which attention might be called, it seems clear that the Pine Bluff jobbers merely resorted to a common

expedient, recognized by law and sanctioned by practice, of forming a subsidiary corporation to promote economy in the management of their existing business and to extend it into other fields of legitimate enterprise. If the new expedient affected interstate commerce at all, it was not in that direct, immediate, or necessary way which alone would make it obnoxious to the law, but only in an indirect, incidental, and unimportant way not within the denunciation of the law. The worst that can be said is that the parties availed themselves of certain advantages and opportunities which their relation to the brokerage business gave them and which materially aided them in the race of competition. If this resulted in injury to the plaintiff, it was damnum absque injuria. Free competition is the life of trade and commerce, and it is quite as important to approve all lawful, fair, and reasonable expedients devised to promote individual success as it is to condemn vicious and unlawful practices which violate individual right and the public weal.

The learned trial judge should have given the requested instruction to the jury that plaintiff was not entitled to recover. The judgment is therefore reversed, and the cause remanded to the Circuit Court for a new trial in harmony with the views here announced.

(173 Fed. 908.)

WELLINGTON v. PELLETIER.

(Circuit Court of Appeals, First Circuit. November 16, 1909.)

No. 838.

1. APPEAL AND ERROR (§ 231*)—REVIEW—RECEPTION OF EVIDENCE.

The rule applied that, under the federal practice, a party who relies on a general objection to evidence must show that the defects in the evidence admitted, which are relied on, could not have been cured by the party offering it, if his attention had been called to them.

[Ed. Note.—For other cases, see Appeal and Error, Dec. Dig. § 231;* Trial, Cent. Dig. § 194.]

2. MASTER AND SERVANT (§ 235*)—INJURY TO SERVANT—CONTRIBUTORY NEGLIGENCE—DUTY TO OBSERVE AND AVOID DANGER.

Plaintiff's decedent, while at work making a trench between the rails of a private spur track which led from a railroad siding to defendant's quarry, was struck and killed by a car which had been standing with others on the siding, but, being insufficiently blocked, started and ran downgrade upon the spur track. *Held*, that the circumstances were not such as to make the rule applicable which requires unusual care and vigilance on the part of persons on railroad tracks where trains are frequently passing, and that deceased was not chargeable with contributory negligence because he did not keep a constant lookout, and that the circumstances are analogous to those cases requiring the employer to furnish a safe place for working.

[Ed. Note.—For other cases, see Master and Servant, Dec. Dig. § 235.*]

3. MASTER AND SERVANT (§ 139*)—INJURY TO SERVANT—PROXIMATE CAUSE OF INJURY—INTERVENING CAUSE.

Where cars were negligently left standing on a side track at the top of a grade by defendants' employés without being secured, except by the setting of the brakes, and one of such cars ran down upon and killed

plaintiff's intestate, the fact that the brake was released by children playing about the cars did not constitute such an intervening cause as would prevent defendant's negligence from being the efficient proximate cause of the injury.

[Ed. Note.—For other cases, see Master and Servant, Cent. Dig. §§ 275–292; Dec. Dig. § 139.*]

4. MASTER AND SERVANT (§ 287*) — NEGLIGENCE OF SUPERINTENDENT UNDER MASSACHUSETTS STATUTE.

The question whether a person temporarily in charge of defendant's business was one whose principal duty was that of superintendence, so as to render defendant liable for injury to another employé through his negligence under the Massachusetts employer's liability statute, *held* properly submitted to the jury.

[Ed. Note.—For other cases, see Master and Servant, Dec. Dig. § 287.*]

In Error to the Circuit Court of the United States for the District of Massachusetts.

Action by Emma M. Pelletier against Arthur J. Wellington. Judgment for plaintiff, and defendant brings error. Affirmed.

Olcott O. Partridge and H. Eugene Bolles (Henry M. Channing, on the brief), for plaintiff in error.

William A. Pew, Jr., for defendant in error.

Before COLT and PUTNAM, Circuit Judges, and ALDRICH, District Judge.

PUTNAM, Circuit Judge. This suit was brought by the administratrix of the estate of George Pelletier against Wellington, who was operating a quarry, with a verdict for the plaintiff. Wellington owned a spur track which led from a side track of the Boston & Maine Railroad. This side track and the spur track were on a grade. The side track was used for storing empty cars to be loaded in connection with Wellington's business. These cars were left by the Boston & Maine Railroad near the head of the grade on its own siding; and when Wellington or his employés desired cars they were accustomed to select them as needed, and run them down to his spur track. They were ordinarily left near the head of the grade by the railroad corporation with the brakes set, and with a tie across the track blocking the wheels. If the cars were left by the Boston & Maine Railroad on its siding in an unsafe condition with reference to starting down the grade, the fault was with it. So long as the cars remained at that point without any disturbance of the status in which they were left there by the Boston & Maine Railroad, Wellington was, of course, not at fault. It is claimed that, in connection with the injury to the deceased, Wellington's employés ran one or more cars down the grade, and left the remaining cars with their brakes set, without any blocking of the wheels, and that thereupon the boys playing about the cars, and who were accustomed to play about them, in some way started them, and caused them to run down the grade and kill Pelletier. Pelletier was in the employ of Wellington, and at the time was working between the rails of Wellington's spur track, excavating a trench. He appears to have had no connection with the handling of the cars, at least none at

the essential time involved here. There was no evidence that he was looking at the cars, or otherwise watching for a possibility of their running down the grade. The verdict was for the plaintiff, and thereupon Wellington brought this writ of error.

There were a number of minor exceptions taken at the trial, only one of which has been urged upon our attention. This suit being for the negligence of defendant's superintendent, or rather of one who was temporarily acting as superintendent, the statute requires a notice; and it is now urged on us that the notice was not sufficient under the law. The objection to the admission of this notice was only general, which is insufficient to base an exception on under the circumstances of the case, because non constat, if the objection had been specific, it might not have been met by the plaintiff on the spot. Under the federal practice, whoever relies on a general exception must point out that the defects in the evidence admitted could not have been cured by the party offering it, if his attention had been called to those relied on.

Passing by these propositions, the alleged errors are based very largely, if not entirely, on questions of fact which we will deal with quite summarily, because no prejudice can come in any future case from thus dealing with them.

It appears in the record that, when the cars were left by the Boston & Maine Railroad, they were chained to the track. There is no claim that, when any of the cars were taken away as we have described, Wellington's employés replaced the chain with reference to the cars remaining. We pass by this because, under the circumstances, it is clear that the jury could not have been properly instructed to the effect that a mere omission to replace the ties was not a negligent act, as the appellant claims they should have been. This is one of the class of facts within the province of the jury, supported in this case by the almost universal custom to protect railroad cars left near the head of a grade, as these cars were, by something more than merely setting up the brakes.

It is claimed that there was no evidence that the tie was not replaced; but on this point the record stands as follows: Three men went up to bring down the cars. One of them came down with the last car, leaving the two to secure those that remained. One of these men testified that he did not put the tie back, and he added that he had no business to put it back. No one told him to do so. The other one, who was called by the defendant, testified generally, with reference to all the cars, that the tie was put back. He testified that he and the first witness, to whom we have referred, went to the last car which went down the grade, and that one of them handled the tie; but he admitted he did not know whether he did it himself, or the other person we have named. Under the circumstances, we are not only of the opinion that we would not be justified in reversing the finding of the jury on that point, but that, on the other hand, its conclusion was correct.

It is maintained that the deceased was not in the exercise of due care, and there is some discussion with reference to the question of the burden of proof under the Massachusetts statute on which this suit is

based. The ground of this objection is that the deceased was an able-bodied, experienced workman, in full possession of his faculties, familiar with his surroundings, and knew that the cars were stored on the side track above described, that his view was not obstructed, and that he could easily see in each direction. But this is not the case of either a main track or a siding on which trains were regularly or frequently run, or even run at all, so far as the record shows. It shows only the circumstances which we have stated, circumstances to which the duty of listening and looking, so frequently concerned in accidents resulting from the movement of railroad trains proper, has never been applied. This duty relates to circumstances where persons may be in known danger, although every other person does his full part according to law or custom. It does not necessarily apply to the ordinary conditions of work where no danger is customarily expected, provided others than the one injured have used due care. In other words, there is no rule which requires a universal duty of looking and listening under the ordinary circumstances of performing labor, and thus at all times incumbering and delaying its performance. This case is rather of the class where the person held in fault is required to secure the person injured a safe place for working, as a consignee unloading a car. Wright v. The Railway, L. R. 10 Q. B. 298, affirmed 1 Q. B. 252 (1876); Mullins v. Railroad Co., 201 Mass. 38, 87 N. E. 476.

It is claimed that the interposition of the boys in this case was the interposition of a new efficient cause, which, if interposed, the law says eliminates the original cause. On the other hand, it has been thoroughly understood, since the leading case of Scott v. Sheperd, 2 W. Bl. 892, well known as the "Squib Case," that the interposition even of human beings, acting under circumstances which deprive them of periods for reflection, or known to be of classes which are ordinarily governed by unreasoning impulses, does not come within the class of responsible interventions referred to. This is illustrated in one direction by the squib case, and in the other direction by the well-known cases where young children, either through carelessness or inattention, have been intrusted with dangerous weapons. The general principle is sufficiently discussed in Pollock's Law of Torts (8th Eng. Ed.) 45 et seq. The rule on which the plaintiff relies in this respect was authoritatively stated and applied by the Court of Appeal in 1896 in Engelhart v. Farrant, [1897] 1 Q. B. 240. Oddly enough, in McDowall v. Great Western Railway Company (in the Court of Appeal in 1902) 2 Q. B. [1903] 331, the circumstances with reference to cars and boys were strictly like those at bar and the case was distinguished solely on the point that the jury expressly found that the defendant was not at fault. Therefore, of course, there was no operative negligence which could be either an immediate or a remote cause of the accident.

After all, the only close point in the case is on the question of superintendence. The intestate and the man through whose negligence the tie was not replaced were coemployés. The usual superintendent was absent. Of course, evidence of a much less striking character may be required to prove the characteristics of one exercising superintendence temporarily under the Massachusetts statutes than those of the usual

superintendent. We went into the law regarding this question of superintendence sufficiently in Canney v. Walkeine, 113 Fed. 66, 51 C. C. A. 53, 58 L. R. A. 33, decided June 14, 1901, and in Munroe v. Ley, 156 Fed. 468, 84 C. C. A. 278, decided October 22, 1907. We need in this case to add nothing to what is there stated by us. It is not at all improbable that, if we had been the jury, instead of the appellate court, we might have found on the facts otherwise than was found. Nevertheless, the charge of the presiding judge was very full and clear, and called the attention of the jury carefully and correctly to all phases of the facts, which were multifarious; and, taken altogether, the condition is such that we cannot lawfully interfere with the result.

The judgment of the Circuit Court is affirmed, with interest, and the defendant in error recovers her costs of appeal.

(173 Fed. 912.)

RUDD v. UNITED STATES.

(Circuit Court of Appeals, Eighth Circuit. October 28, 1909.)

No. 2,875.

1. POST OFFICE (§§ 35, 50*) — USING MAILS TO DEFRAUD — PROSECUTION — DEFENSES.

   In a prosecution under Rev. St. § 5480 (U. S. Comp. St. 1901, p. 3696), for using the mails to defraud, it is a defense that defendant honestly believed that the representations made in the letters or circulars which he is charged with having sent through the mails were true, and that he had no actual intent to defraud, and when such defense is made it is for the determination of the jury.

   [Ed. Note.—For other cases, see Post Office, Cent. Dig. § 55; Dec. Dig. §§ 35, 50.*]

2. CRIMINAL LAW (§ 755½*)—TRIAL—COMMENTS OF JUDGE ON EVIDENCE.

   While it is the right of the judge of a federal court, in a criminal as well as a civil case, to comment on the facts in his charge to the jury, his comments should be judicial and dispassionate, and so carefully guarded that the jurors, who are the triers of them, may be left free to exercise their independent judgment.

   [Ed. Note.—For other cases, see Criminal Law, Cent. Dig. § 1731; Dec. Dig. § 755½.*]

3. CRIMINAL LAW (§ 823*) — REVIEW BY APPELLATE COURT — COMMENTS OF JUDGE ON DEFENSE.

   Where the langauge of a court in commenting on the defense relied on in a criminal case in its charge to the jury was so positive and emphatic and of such a character that the jury may have believed that a finding for the defendant would subject them to ridicule, a mere withdrawal of such language, and a direction to the jury that the question is for them, may be of doubtful sufficiency to correct such impression, and in such case the just remedy is a new trial.

   [Ed. Note.—For other cases, see Criminal Law, Cent. Dig. § 1995; Dec. Dig. § 823.*]

In Error to the District Court of the United States for the Western District of Missouri.

John F. Rudd was convicted of using the mails to defraud, and brings error. Reversed.

Paul R. Stinson (R. R. Brewster, on the brief), for plaintiff in error.

A. S. Van Valkenburgh, U. S. Atty., and Leslie J. Lyons, Asst. U. S. Atty.

Before HOOK, Circuit Judge, and RINER and AMIDON, District Judges.

HOOK, Circuit Judge. Rudd was convicted of using the mails in aid of a scheme to defraud, contrary to section 5480 of the Revised Statutes (U. S. Comp. St. 1901, p. 3696). He had been associated with others in selling county rights to handle a machine for which one of them had secured a patent, and to facilitate the business they were engaged in they sent through the mails circulars and other communications containing alluring representations which the government charged and the evidence showed quite clearly were contrary to well-known fundamental physical laws. The machine was designed as an attachment to a pump for lifting water, and it consisted principally of a heavy pendulum, a lever, some cogwheels, and a spring. It was represented that the power for the operation of the pump came from the swing of the pendulum and the spring; that the latter was auxiliary to the pendulum, and replenished the loss in the momentum of the swinging weight. It was also said that they were adapted to pumps in wells as deep as 300 feet; that there were three sizes of them, and each stroke of the pendulum on size No. 1, which was the smallest, exerted a lifting power of 500 pounds and had a capacity of 20 gallons of water per minute; that one winding of the spring would require only about 15 minutes of labor, and would furnish enough power for 12 consecutive hours of operation, or for about 12 days for the average user of water; also that the arrangement was so simple a 17 year old boy could attend to it. There were other representations; but the above will indicate with sufficient particularity the character of their literature.

The main defense was that, though the machine may have been impracticable, the accused honestly believed in its efficiency, and that what he did was without intent to defraud. Of course, if this was so, there was no violation of the law which was designed to prevent the use of the post office in intentional efforts to despoil. Durland v. United States, 161 U. S. 306, 16 Sup. Ct. 508, 40 L. Ed. 709. A representation may be so obviously without foundation as to afford cogent evidence of a criminal intent in him who makes it; but nevertheless, if in fact it proceeds from honest ignorance or delusion, it does not help to make a scheme to defraud within the statute. Complaint is made that the trial court, by extended remarks in the presence of the jury, erroneously prejudiced the accused in respect of this defense. It is sufficient to say, without going into details, that the view was undoubtedly impressed upon the jury that no one with the slightest degree of intelligence above insanity could believe the machine was practicable. The accused was sane; but the remarks of the court left no room for the probability of his self-deception. Whether conduct which is made the subject of a criminal charge results from a credulous self-deception, or, on the other hand, evinces a design to defraud the public, is a question for the determination of the jury; and it is none the less so,

though the truth of the matter may be clear to most intelligent minds. That so many projects, which to the discerning are manifest schemes for spoliation, meet with success and find victims among honest, well-meaning people, shows how futile it is to attempt to define the bounds of human credulity. If the jury believed the accused was of sane mind, of which there was no question, the remarks of the court were calculated to impose upon them a constraint that interfered with an independent consideration of his defense. As Chief Justice Fuller said in Starr v. United States, 153 U. S. 614, 626, 14 Sup. Ct. 919, 38 L. Ed. 841, the influence of the trial judge on the jury is necessarily and properly of great weight, and his lightest word or intimation is received with deference and may be controlling. So positive and emphatic were the remarks of the court that it is not too much to say the jury may have believed a finding for the accused would have subjected them to ridicule. True, the court afterwards withdrew the language, and said that "it does not follow that a man is a fool or insane who believes the representations," and that it was a question for the jury; but it is doubtful the damage was repaired, and when that is the case the just remedy is a new trial. A mere withdrawal of words, and a direction to the jury that the question is for them, is not always sufficient. The effect of what was said may remain.

We do not mean to impair in any degree the right of a trial court in both civil and criminal cases to comment upon the facts, to express its opinion upon them, and to sum up the evidence, for that is one of the most valuable features of the practice in the courts of the United States. A judge should not be a mere automatic oracle of the law, but a living participant in the trial, and so far as the limitations of his position permit should see that justice is done. But his comments upon the facts should be judicial and dispassionate, and so carefully guarded that the jurors, who are the triers of them, may be left free to exercise their independent judgment.

The other matters of which complaint is made need not be considered.

The judgment is reversed, and the cause remanded for a new trial.

(173 Fed. 855.)

A. LESCHEN & SONS ROPE CO. v. MAYFLOWER GOLD MINING & REDUCTION CO.

(Circuit Court of Appeals, Eighth Circuit. November 1, 1909.)

No. 3,026.

1. PAYMENT (§ 17*)—BY NOTE—ACCEPTANCE OF DEBTOR'S NOTE IS NOT PAYMENT OF HIS DEBT.

The acceptance by a creditor of a promissory note of his debtor for his antecedent debt does not extinguish it, unless the note is paid. It is a conditional, and not an absolute, payment.

[Ed. Note.—For other cases, see Payment, Cent. Dig. §§ 70–77; Dec. Dig. § 17.*]

2. PAYMENT (§ 17*) — BY NOTE — AGREEMENT OR INDUBITABLE INTENTION OF CREDITOR TO TAKE RISK OF THE NOTE'S PAYMENT REQUISITE TO EXTINQUISH DEBT.

A clear agreement by the creditor that he will take the risk of the payment of the note, and that the debt is discharged thereby, or an indubitable intention so to do, is requisite to extinguish a debt by the taking of the debtor's note.

[Ed. Note.—For other cases, see Payment, Cent. Dig. §§ 70–77; Dec. Dig. § 17.*]

3. PAYMENT (§ 17*)—AGREEMENT THAT DEBT IS TO BE PAID OR HAS BEEN PAID BY NOTE MEANS CONDITIONALLY, AND NOT ABSOLUTELY, PAID.

An agreement that a debt shall be paid, or that it has been paid, by the note of the debtor, is a contract for an extension of time, and that the debt shall be paid, or has been paid, by the note on condition that the note is paid.

[Ed. Note.—For other cases, see Payment, Cent. Dig. §§ 70–77; Dec. Dig. § 17.*]

4. PAYMENT (§ 67*)—BY NOTE—ACCEPTANCE OF SECURITY STRENGTHENS PRESUMPTION THAT PAYMENT IS CONDITIONAL.

A lien, a title, or other security held for the payment of a debt strengthens the presumption that an agreement that a debt is to be paid, or has been paid, by the note of a debtor, is subject to the condition that the note is subsequently paid.

[Ed. Note.—For other cases, see Payment, Dec. Dig. § 67.*]

5. CONTRACTS (§ 147*)—CONSTRUCTION—COURTS TO ASCERTAIN INTENTIONS OF PARTIES FROM THEIR SITUATION WHEN MAKING AGREEMENT.

The court, so far as possible, should put itself in the place of the parties to the contract when their minds met upon the terms of the agreement, and then from a consideration of the writing itself, of its purpose, and of the circumstances which conditioned its making, endeavor to ascertain what they intended to agree to do, upon what sense and meaning of the terms they used their minds actually met.

[Ed. Note.—For other cases, see Contracts, Cent. Dig. §§ 730, 743; Dec. Dig. § 147.*]

6. CONTRACTS (§ 154*) — CONSTRUCTION — COMMON RATIONAL MEANING PREFERRED TO UNUSUAL OR SUBTLE ONE.

Where the language of the agreement is contradictory, obscure, or ambiguous, or where its meaning is doubtful, so that the contract is fairly susceptible of two constructions, one of which makes it fair, customary, and such as prudent men would naturally execute, while the other makes it inequitable, unusual, or such as reasonable men would not be likely to enter into, the interpretation which makes it a rational and probable

agreement must be preferred to that which makes it an unusual, unfair, or improbable contract.

[Ed. Note.—For other cases, see Contracts, Cent. Dig. § 735; Dec. Dig. § 154.*]

7. CONTRACTS (§ 147*) — INTENTION DEDUCED FROM WRITING PREVAILS OVER INAPT EXPRESSIONS.

The intention of the parties, when manifest, or when ascertained from the written agreement, must control and be enforced, without regard to inapt expressions or the dry words of the contract, unless that intention is directly contrary to the plain sense of the binding words of the agreement.

[Ed. Note.—For other cases, see Contracts, Cent. Dig. §§ 730, 743; Dec. Dig. § 147.*]

(Syllabus by the Court.)

In Error to the Circuit Court of the United States for the District of Colorado.

Action by the Mayflower Gold Mining & Reduction Company against the A. Leschen & Sons Rope Company. Judgment for plaintiff, and defendant brings error. Reversed and remanded.

Charles C. Butler, for plaintiff in error.

H. M. Hogg and C. L. Watson, for defendant in error.

Before SANBORN and VAN DEVANTER, Circuit Judges, and WILLIAM H. MUNGER, District Judge.

SANBORN, Circuit Judge. This writ of error was sued out to reverse a judgment in favor of the defendant in error, the Mayflower Gold Mining & Reduction Company, a corporation, upon the pleadings which disclosed these facts: The mining company agreed to buy certain materials for a tramway from the plaintiff in error, A. Leschen & Sons Rope Company, a corporation, and to pay it therefor $1,000 on the execution of the contract, $2,500 upon a sight draft with bill of lading attached upon the delivery of a specific part of the goods f. o. b. the cars at St. Louis, in the state of Missouri, $2,500 30 days from the date of that bill of lading, $6,600 on a sight draft with bill of lading attached upon the delivery f. o. b. the cars at St. Louis of another specified part of the materials, and $4,200 "to be paid by your [the mining company's] note at sixty (60) days, * * * not later than sixty (60) days from arrival of last shipment," and the rope company agreed to sell these materials upon condition that the title and ownership thereof should remain in it, and that it might take possession thereof "in default of the last payment being made." The rope company delivered all the materials, the mining company made all the payments, except the last, and gave its note for that, but never paid the note. After the note was dishonored, the rope company replevied the materials, and the court below dismissed its action, on the ground that the mining company had made the last payment in accordance with the terms of the agreement by giving the note, which it had refused to pay.

The argument in support of this conclusion is that by the terms of the contract the parties expressly agreed that the $4,200 was "to

be paid by your [the mining company's] note at sixty (60) days," that the note was given, and that thereby the $4,200 was paid in the way the parties agreed that it should be paid, so that there was never any default in the last payment, and the title to the property vested in the purchaser. But was this the meaning of the contract? Does this agreement evidence the intention of the parties to it that the title to this property should pass to the vendee when the latter gave its 60-day note? The purpose of all interpretation is to ascertain and to give effect to the intentions of the parties expressed by their writings. The basic rule for the discovery of those intentions is that the court, so far as possible, should put itself in the place of the parties to the contract when their minds met upon the terms of the agreement, and then, from a consideration of the writing itself, of its purpose, and of the circumstances which conditioned its making, endeavor to ascertain what they intended to agree to, upon what sense and meaning of the terms they used their minds actually met. American Bonding Co. v. Pueblo Investment Co., 150 Fed. 17, 27, 80 C. C. A. 97, 107, 9 L. R. A. (N. S.) 557; Accumulator Co. v. Dubuque St. Ry. Co., 64 Fed. 70, 74, 12 C. C. A. 37, 41, 42; Salt Lake City v. Smith, 104 Fed. 457, 462, 43 C. C. A. 637, 643; Fitzgerald v. First National Bank, 114 Fed. 474, 482, 52 C. C. A. 276, 284.

Where the language of an agreement is contradictory, obscure, or ambiguous, or where its meaning is doubtful, so that the contract is fairly susceptible of two constructions, one of which makes it fair, customary, and such as prudent men would naturally execute, while the other makes it inequitable, unusual, or such as reasonable men would not be likely to enter into, the interpretation which makes it a rational and probable agreement must be preferred to that which makes it an unusual, unfair, or improbable contract. Pressed Steel Car Co. v. Eastern Ry. Co., 121 Fed. 609, 611, 57 C. C. A. 635, 637; Coghlan v. Stetson (C. C.) 19 Fed. 727, 729; Jacobs v. Spalding, 71 Wis. 177, 186, 36 N. W. 608; Russell v. Allerton, 108 N. Y. 288, 292, 15 N. E. 391.

The intention of the parties, when manifest, or when ascertained from the written agreement, must control and be enforced, without regard to inapt expressions or the dry words of the contract, unless that intention is directly contrary to the plain sense of the binding words of the agreement. American Bonding Co. v. Pueblo Investment Co., 150 Fed. 17, 28, 80 C. C. A. 97, 108; Prentice v. Duluth, etc., Forwarding Co., 58 Fed. 437, 443, 7 C. C. A. 293, 298; Westervelt v. Mohrenstecher, 76 Fed. 118, 121, 22 C. C. A. 93, 95, 34 L. R. A. 477; Tillitt v. Mann, 104 Fed. 421, 424, 43 C. C. A. 617, 619; Salt Lake City v. Smith, 104 Fed. 457, 462, 43 C. C. A. 637, 643, 644; Uinta Tunnel, etc., Co. v. Ajax Gold Mining Co., 141 Fed. 563, 567, 73 C. C. A. 35; U. S. Fidelity & G. Co. v. Board of Com'rs, 145 Fed. 144, 148, 76 C. C. A. 114; Witt v. Railway Company, 38 Minn. 122, 127, 35 N. W. 862; Driscoll v. Green, 59 N. H. 101; Johnson v. Simpson, 36 N. H. 91; Walsh v. Hill, 38 Cal. 481, 486, 487.

The acceptance by a creditor of the promissory note of his debtor for his antecedent debt does not extinguish it, unless the note is paid. It is not an absolute, but a conditional, payment of the debt. Downey

v. Hicks, 14 How. 240, 243, 14 L. Ed. 404; The Kimball, 3 Wall. 37, 45, 18 L. Ed. 50; The Emily Souder, 17 Wall. 666, 670, 21 L. Ed. 683; Peter v. Beverly, 10 Pet. 532, 568, 9 L. Ed. 522; Lyman v. The Bank of the United States, 12 How. 225, 243, 13 L. Ed. 965; In re Worcester County, 102 Fed. 808, 814, 42 C. C. A. 637, 643; Atlas S. S. Ltd. v. Colombian Land Company, 102 Fed. 358, 359, 42 C. C. A. 398, 399; Cheltenham Stone & Gravel Co. v. Gates Iron Works, 23 Ill. App. 635, 637; Id. 124 Ill. 623, 626, 16 N. E. 923; Hine v. Roberts, 48 Conn. 267, 271, 40 Am. Rep. 170; First National Bank of Pueblo v. Newton, 10 Colo. 161, 171, 14 Pac. 428.

A clear agreement by the creditor that he will take the risk of the payment of the note and that the debt is discharged thereby, or the indubitable intention of both the parties to that effect, is requisite to extinguish a debt by the taking of the debtor's note. An agreement that a debt shall be paid, or shall be payable, or that it has been paid by the note of the debtor, is a contract for an extension of the time of payment, and that the debt shall be paid, or that it has been paid, by the note of the debtor on condition that the note is paid, but not otherwise. Combination Steel & Iron Co. v. St. Paul City Railway, 47 Minn. 207, 209, 49 N. W. 744; 2 Benjamin on Sales (7th Ed.) § 729; Story on Promissory Notes, par. 404; Tobey v. Barber, 5 Johns. (N. Y.) 68, 72, 4 Am. Dec. 326; Eastman v. Porter, 14 Wis. 39, 42, 46, 47; Johnson v. Weed, 9 Johns. (N. Y.) 310, 6 Am. Dec. 279; Comptoir D'Escompte v. Dresbach, 78 Cal. 15, 20, 21, 20 Pac. 28; Putnam v. Lewis, 8 Johns. (N. Y.) 389; Owenson v. Morse, 7 Term Reports, 64, 66; Sayer v. Wagstaff, 5 Beavan's Reports, 415, 423, 49 English Rep. Full Reprint, 639, 642; Maillard v. Duke of Argyle, 6 Manning & Granger's Rep. (46 English Common Law) 40, 46; Port Darlington Harbour Co. v. Squair, 18 U. C. Q. B. 533. Where the extinguishment of a debt has the effect to strike down a lien or a title securing its payment, the presumption that it is not discharged by the acceptance of the note of the debtor in payment of it is strengthened, because in such a case the discharge of a lien is more unusual and unreasonable. The Kimball, 3 Wall. 37, 45, 18 L. Ed. 50; Sweet & Carpenter v. James, 2 R. I. 270, 294, 297; The Bird of Paradise, 5 Wall. 545, 18 L. Ed. 662.

The application of these rules of law to the facts of the case in hand leaves little doubt of the sense and meaning of the provision of the contract that the $4,200 should be paid by the note of the mining company upon which the minds of the parties to this contract must have met. The ordinary meaning of that term was that the debt should be paid by the note on condition that the note was paid, but should not be extinguished otherwise, and the common and customary meaning of an expression is to be preferred to an unusual and ingenious interpretation of it. The payment of that part of the purchase price of the property was secured by the retention of the title in the vendor, and this fact raises a strong presumption that the parties did not intend that the security should be released until the note was paid. The vendor was of St. Louis, the vendee of Colorado, the goods were to be shipped in two specified parcels at two different times from the former to the latter place, the vendee agreed to pay $16,800 for them in five installments, the first four in cash before the vendee could get posses-

sion of the second shipment, and the last installment, the $4,200, by the vendee's note at 60 days. The payment of the first four installments was secured by the retention by the vendor of the bill of lading of the last shipment until those installments were paid in cash, so that the only purpose and the only effect of the retention of the title to the property by the vendor thereafter was to secure the payment of the last installment, and this purpose and effect would be defeated by a construction that the debt for this installment was to be extinguished, and the security for it released, by the giving of the debtor's note, which was unpaid, an obligation of no higher character than its obligation to pay the installment without the note.

The futility and unreasonableness of a stipulation thus interpreted, the strong presumption that the parties did not intend to agree that the security should be released until the debt of the obligor was absolutely paid, and the facts that the giving and acceptance of a note for a debt does not extinguish it, that the common and customary meaning of agreements that a debt has been paid, or that it shall be paid, by note, is that it has been paid, or that it will be paid, on condition that the note is paid, that it is only when there is a clear agreement by the creditor that the note of the debtor shall discharge the debt and that the creditor will take the risk of the payment of the note, or an indubitable intention of the parties to that effect, that a creditor's acceptance of such a note extinguishes the debt or releases its security, and the further fact that there was no such agreement in this case, compel the conclusion that the parties to this controversy never intended to agree, and never did agree, that the $4,200 should be absolutely paid, or that the security for its payment should be released, by the acceptance of the debtor's note. It remained unpaid, and will remain unpaid, until that note is paid.

The judgment must be reversed, therefore, and the case must be remanded to the Circuit Court for further proceedings in accordance with the views expressed in this opinion; and it is so ordered.

(173 Fed. 609.)

F. B. VANDEGRIFT & CO. v. UNITED STATES.

(Circuit Court of Appeals, Third Circuit. August 20, 1909.)

No. 43 (1,683).

1. CUSTOMS DUTIES (§ 44*)—SIMILITUDE—RAMIE SLIVER.

Ramie sliver is dutiable as cotton sliver by similitude, under Tariff Act July 24, 1897, c. 11, § 1, Schedule I, par. 302, 30 Stat. 175 (U. S. Comp. St. 1901, p. 1655).

[Ed. Note.—For other cases, see Customs Duties, Cent. Dig. § 148; Dec. Dig. § 44.*]

2. CUSTOMS DUTIES (§ 44*)—SIMILITUDE—"SIMILAR IN MATERIAL"—"SIMILAR IN QUALITY"—"SIMILAR IN TEXTURE"—"SIMILAR IN USE."

Within the meaning of the similitude clause in Tariff Act July 24, 1897, c. 11, § 7, 30 Stat. 205 (U. S. Comp. St. 1901, p. 1693), ramie sliver resembles cotton sliver (1) in "material," because it is a vegetable fiber; (2) in "quality," because it has reached the same degree of purity, or freedom from objectionable substances; (3) in "texture," because the fibers are in the same form; and (4) in "use," because, like cotton sliver, it is spun into yarn and thread, so as to be manufactured into fabrics.

[Ed. Note.—For other cases, see Customs Duties, Cent. Dig. § 148; Dec. Dig. § 44.*]

8. COURTS (§ 90*)—COMITY—WEIGHT OF DECISION BY COURT OF SAME RANK.

While it is desirable that there should be uniformity of decision upon the same question, there rests upon the court the duty of determining by its own investigation the matter at issue; and, though it may have been decided in one way by a court of similar authority in another jurisdiction, such decision is not of binding force, though possessing certain persuasive value, determined by the strength and logic of its statement.[1]

Appeal from the Circuit Court of the United States for the Eastern District of Pennsylvania.

For decision below, see 164 Fed. 65.

W. Wickham Smith (Francis Fisher Kane, on the brief), for importers.

Jasper Yeates Brinton, Asst. U. S. Atty., and J. Whitaker Thompson, U. S. Atty.

Before GRAY and BUFFINGTON, Circuit Judges, and YOUNG, District Judge.

YOUNG, District Judge. This case comes before us upon an appeal from the judgment of the Circuit Court for the Eastern District of Pennsylvania, affirming the decision of the Board of General Appraisers on the classification of merchandise invoiced as "ramie sliver," classified for duty by the Board of General Appraisers under paragraph 302, Schedule I, § 1, and section 7, of the tariff act of 1897 (Act July 24, 1897, c. 11, 30 Stat. 175, 205 [U. S. Comp. St. 1901, pp. 1655, 1693]), by similitude to cotton sliver, against the protest of the importers. The merchandise was originally assessed for duty by the collector of customs at 45 per cent. ad valorem, under paragraph 347, as a manufacture of ramie not specially provided for. Upon appeal to the Board of General Appraisers, it appeared that during the interim precisely similar merchandise had been made the subject of an elaborate opinion by the Board of General Appraisers in New York, later affirmed by consent by the Circuit Court in what is known as the Eckstein Case (In re Albert Eckstein, G. A. 5,822 [T. D. 25,710]), holding that the merchandise was not a manufacture, but was dutiable at the same rate of duty, to wit, 45 per cent., by similitude to cotton sliver, and upon the authority of this decision the Board of General Appraisers sustained the classification of the collector in the case at bar.

In the case at bar, upon the appeal to the Circuit Court for the Eastern District of Pennsylvania, Judge McPherson, after reciting the decision of the Board of General Appraisers and the decision in the Eckstein Case, concluded as follows:

"This decision of the board was affirmed by the Circuit Court for the Southern District of New York (T. D. 26,462), and, although the ruling of the court was entered by consent, the decision was acquiesced in during the last three years. The present proceeding is, therefore, an indirect attack upon the judgment then entered by Judge Townsend, and, if successful, would result in the imposition of one rate of duty when the merchandise in question is brought into this district, and of a different rate when it is brought into the Southern

[1] See note at end of case.

district of New York. It is hardly necessary to point out the undesirability of such a result. This has already been done by the Court of Appeals for the Third Circuit in two cases (Hill v. Francklyn, 162 Fed. 880, 89 C. C. A. 570, T. D. 29,074, and Murphy v. United States, 162 Fed. 871, 89 C. C. A. 561, T. D. 29,032), in each instance affirming the decision of Judge Holland, reported in T. D. 28,856 and T. D. 28,819, respectively. If, therefore, the ruling in Eckstein's Case is to be dissented from, I think the proper tribunal to announce such a view is the Court of Appeals, and for this reason I shall follow the formal judgment of the Circuit Court for the Southern District of New York, adding merely that, if the similitude section is applicable, the rate determined thereby is to be preferred to the rate fixed by section 6. Hahn v. United States, 100 Fed. 635, 40 C. C. A. 622. The decision of the Board of General Appraisers is affirmed."

The specifications of error raise a single question: Did the learned judge err in adopting the decision of the Circuit Court for the Southern District of New York, and in holding the merchandise in question dutiable by similitude to cotton sliver? The learned judge was clearly right in saying that it is desirable that different decisions should not be made as to the rate of duty upon the same articles in the different districts. There rests undoubtedly upon a court the duty of determining by its own investigation whether or not the article should bear a certain duty. This is saying no more than that each court will decide the question for itself, unless the appellate court has determined the question for it; but that it has been decided in a certain way in one jurisdiction should have weight, because of the desirability of having uniformity of decision upon the same question, and the decision itself has a certain persuasive value, determined by the strength and logic of its statement, and this is especially true of the case at bar. While, therefore, we would not feel ourselves bound by a decision of a court of another jurisdiction upon the same question, we are satisfied in this case that the learned judge made no error in following the decision in the Eckstein Case.

The real question in this case was: Is ramie sliver to be charged with a duty of 45 per cent. ad valorem, provided for by paragraph 302, which fixes for cotton sliver that rate, because under section 7 it is provided:

"That each and every imported article not enumerated in this act, which is similar, either in material, quality, texture, or the use to which it may be applied, to any article enumerated in this act as chargeable with duty, shall pay the same rate of duty which is levied on the enumerated article which it most resembles in any of the particulars before mentioned."

We are of opinion that ramie sliver is in similitude with cotton sliver and should bear the same duty, because it resembles in material, quality, texture, and use cotton sliver. It is similar to cotton sliver, in that it is a vegetable product, or, as stated in the statute, of vegetable fiber. It is similar in quality, in that it has reached the same degree of purity, if the word is applicable, as cotton sliver. Its treatment has been to get rid of the gummy substances and produce something comparatively free from the impurities or substances that must be discarded to make it fit for further treatment in manufacture. Its tensile strength is greater than that of cotton; but in texture cotton sliver and ramie sliver are practically the same. It is the crude straightening out of the fiber in layers, just as cotton sliver is. As to its use,

it can certainly be and is spun into yarn, a finer reduction of the sliver, then into thread by continuous manufacture, so as to finally reach a proper degree of purity and fineness, so that it can be manufactured into fabrics—a similar process to that through which cotton passes from the sliver. In all these ways and respects it seems to us to resemble cotton sliver. The opinion of the Board of General Appraisers seems to us to show very clearly and specifically that ramie sliver belongs by way of similitude to the article known as cotton sliver.

The finding of the Circuit Court, affirming the decision of the General Appraisers, should be sustained; and the judgment of the lower court is therefore affirmed.

NOTE.

Decisions of Courts as Authority in Other Co-ordinate Courts.

I. In General.

[a] (U. S.) Judges who sit in the same court should not attempt to overrule the decisions of each other, especially on questions involving rules of property and practice, except for the most cogent reasons.—(1904) Plattner Implement Co. v. International Harvester Co., 66 C. C. A. 438, 133 Fed. 376; (1905) Boatmen's Bank of St. Louis v. Fritzlen, 68 C. C. A. 288, 135 Fed. 650, reversing judgment and order (C. C. 1904) Weldon v. Fritzlen, 128 Fed. 608.

[b] (U. S. 1849) The rule of comity which requires judges of the federal courts to conform to the opinions of each other, if any have been given, has no application either by its terms, or the reason on which it is founded, to motions for injunctions where error may be followed by irremediable mischief. —Many v. Sizer (C. C.) Fed. Cas. No. 9,057 [1 Fish. Pat. Cas. 31].

[c] (U. S. 1884) One court does not reverse or review a judgment of a court of co-ordinate jurisdiction.—Hayes v. Dayton (C. C.) 20 Fed. 690.

[d] (U. S. 1901) One federal judge will not review the rulings of another in the same court.—Taylor v. Decatur Mineral & Land Co. (C. C.) 112 Fed. 449.

II. State Courts of Appellate Jurisdiction.

[a] (Ill. 1899) Where two fines were imposed upon a party for contempt in the same proceedings, but not for the same act, and an appeal taken from each order imposing a fine, one of which appeals has been before and decided by the other division of this court (the records, briefs, argument, and questions of law being the same in both appeals), there is no reason why this court should do more than to refer to the opinion of that division and adopt it as the opinion of this court.—Railton v. People, 85 Ill. App. 384.

[b] (Ill. 1906) The Appellate Court of one district is not bound by the decision of an Appellate Court of another district rendered with respect to the same subject-matter, but not in the same case.—Illinois Cent. R. Co. v. Hecker, 129 Ill. App. 375.

[c] (N. Y. 1907) Laws 1907, p. 1123, c. 538, providing for a recount and recanvass of the votes cast for the office of mayor in the November, 1905, election in cities of the first class, having been held constitutional by the Appellate Division of the Second Department, a writ of prohibition to restrain the enforcement of such act would not be granted by the Appellate Division of the First Department; the act being purely local and affecting only the city of New York, a part of which is within both the First and Second judicial departments, though the judges sitting in the First Department were unanimously of the opinion that the act was unconstitutional.—People v. Dayton, 120 App. Div. 814, 105 N. Y. Supp. 809.

[d] (Ohio, 1885) Where a legal proposition has been directly decided by a circuit court, it should be followed by other circuit courts, unless it clearly appears that such decision is wrong.—State v. Fosdick, 1 Ohio Cir. Ct. R. 265, 1 O. C. D. 145.

[e] (Okl. 1909) The Supreme Court of the state of Oklahoma took and possesses any and all the jurisdiction of the Supreme Court of the territory of Oklahoma, except as otherwise provided, and has the same power and right to re-examine a decision of that court, holding a territorial statute invalid, and to determine whether or not such act is invalid, and, if such decision is erroneous, to overrule the same.—State v. Chaney, 102 Pac. 133.

III. STATE COURTS OF LIMITED OR INFERIOR JURISDICTION.

[a] (N. Y. 1851) Whatever may be the proper rule as to the Superior Court following the decision of the present Supreme Court (not now an appellate court) in a prior suit, as to the principles of law involved, the court is not bound by the decisions of the Supreme Court, when plainly erroneous as to the facts that were established in the suit.—Reynolds v. Davis, 7 N. Y. Super. Ct. (5 Sandf.) 267.

[b] (N. Y. 1858) A decision of a co-ordinate branch of the Supreme Court of a state will be regarded as of controlling authority in the state until reversed.—Hardenburgh v. Crary, 50 Barb. 32.

[c] (N. Y. 1859) Two successive decisions of general terms concurring on the same point, in different parts of the state, should be treated by the court as authority, until reversed by a higher tribunal.—Andrews v. Wallace, 29 Barb. 350, 17 How. Prac. 263, 8 Abb. Prac. 425.

[d] (N. Y. 1859) The court in the First District will regard the decision of a General Term in another district as controlling, until reversed by the Court of Appeals, unless from some special reason appearing it is clearly erroneous. —Loring v. United States Vulcanized Gutta Percha Belting & Packing Co., 30 Barb. 644.

[e] (N. Y.) When a decision of the Supreme Court is made at a General Term, the general terms in other districts should follow it, unless it is clearly made through some mistake, or so erroneous as to leave no doubt concerning the error.—(1861) Malan v. Simpson, 20 How. Prac. 488, 12 Abb. Prac. 225; (1862) Bentley v. Goodwin, 38 Barb. 633, 15 Abb. Prac. 82.

[f] (N. Y. 1872) An opinion of a judge of the Circuit Court is binding on another judge in the same department of that circuit as against a decision from another state.—Head v. Smith, 44 How. Prac. 476.

[g] (N. Y. 1909.) The Supreme Court at Special Term is bound by a previous decision of the same court at Special Term.—Patterson v. Vivian, 117 N. Y. Supp. 504.

[h] (Ohio, 1881) While a decision of the district court is not binding upon the general term of the superior court of Cincinnati, yet, where a decision of the special term of the superior court is reversed by the district court, and the case remanded to the special term, by which court it is reserved for hearing at the general term, the latter court will treat the decision of the district court as final, because of its being made by a court of co-ordinate jurisdiction, and of the case being reserved to it in the situation it stood at the special term.—Miller v. Hulbert, 6 Wkly. Law Bul. 412.

IV. UNITED STATES CIRCUIT OR DISTRICT COURTS.

1. In General.

[a] (U. S.) Although divided geographically in jurisdiction, the federal Circuit Courts constitute a single system, and, when one court has fully considered and deliberately decided a question, every suggestion of propriety and fit public action demand that it should be followed until modified by the appellate court.—(1864) Goodyear v. Providence Rubber Co. (C. C.) Fed. Cas. No. 5,583 [2 Cliff. 351, 2 Fish. Pat. Cas. 499]; (1874) Goodyear Dental Vulcanite Co. v. Willis (C. C.) Fed. Cas. No. 5,603 [1 Ban. & A. 568, 1 Flip. 388].

[b] (U. S. 1880) The federal Circuit Court will follow the ruling of the federal District Court of another state as to the construction of a statute of such state.—White v. The Cynthia (C. C.) Fed. Cas. No. 17,546a.

[c] (U. S. 1881) Circuit Courts will follow the decisions in other circuits, only where the same questions were raised on substantially the same evidence.—Edgarton v. Furst & Bradley Mfg. Co. (C. C.) 9 Fed. 450.

[d] (U. S. 1883) The Circuit Courts of the United States are co-ordinate tribunals, constituting a single system, and the decisions of one of them, deliberately made, ought usually to be regarded as decisive of the question in-

volved, until otherwise determined by the Supreme Court.—Wells v. Oregon Ry. & Nav. Co. (C. C.) 15 Fed. 561.

[e] (U. S. 1884) A decision in another circuit, in an action between two railroad companies, that the right of action for unpaid dividends due under a lease was in the lessor company, will be followed in an action by stockholders of that company against the lessee for an accounting of such dividends.—Reed v. Atlantic & P. R. Co. (C. C.) 85 Fed. 692.

[f] (U. S. 1886) Whatever conclusion might have been reached by the Circuit Court if the questions presented had not been considered and determined by another Circuit Court, *held*, the decision of the latter court was entitled to great respect, and should be followed.—Celluloid Mfg. Co. v. Zylonite Brush & Comb Co. (C. C.) 27 Fed. 291.

[g] (U. S. 1891) A decision of one of the Circuit Courts of the United States is not necessarily binding on the others.—Northern Pac. R. Co. v. Sanders (C. C.) 47 Fed. 604.

[h] (U. S. 1897) Under the rules of comity, which require the decisions of Circuit Courts to be followed by each other, especially when they relate to the administration of the same subject-matter, a petition by a railroad receiver for an injunction restraining receivers of another line from diverting freight traffic will be granted when the Circuit Court of another circuit has afforded the same petitioner like relief in a similar case against another company.—Grand Trunk Ry. v. Central Vermont R. R. (C. C.) 84 Fed. 66.

[i] (U. S. 1901) Where the affairs of an insolvent building and loan association are being wound up in a federal court in the state of its domicile, the rule adopted by that court for accounting and settlement between the receiver of the corporation and its borrowing stockholders will be followed by a federal court of another district which has appointed an ancillary receiver.—MacMurray v. Gosney (C. C.) 106 Fed. 11; Same v. Kincaid, Id.; Same v. Spear, Id.

[j] (U. S. 1908) Lower federal courts are bound by the decisions of the Supreme Court of the United States and by those of the Circuit Court of Appeals in their own circuit, but are not bound by decisions of a federal court of co-ordinate jurisdiction, or even the decisions of a federal Circuit Court of Appeals in another circuit.—Continental Securities Co. v. Interborough Rapid Transit Co. (C. C.) 165 Fed. 945.

[k] (U. S. 1909) This court will follow the decision in a customs case by the Circuit Court in the Second Circuit, in order to avoid conflict of decision between the collection districts of the two jurisdictions.—Wanamaker v. United States (C. C.) 169 Fed. 664.

[l] (U. S. 1888) The decisions of other District Courts in similar cases will be followed in order to secure uniformity, though those decisions do not seem to be based on sound principles.—The Chelmsford (D. C.) 34 Fed. 399.

2. *In Patent Cases.*

[a] (U. S.) A Circuit Court should follow the decision of another Circuit Court upholding a patent.—(1887) Worswick Mfg. Co. v. City of Philadelphia (D. C.) 30 Fed. 625, decree affirmed Dobson v. Lees (1890) 137 U. S. 258, 11 Sup. Ct. 71, 34 L. Ed. 652; (1892) National Cash Register Co. v. American Cash Register Co., 3 C. C. A. 559, 53 Fed. 367, 3 U. S. App. 340; (1893) Wanamaker v. Enterprise Mfg. Co., 3 C. C. A. 672, 53 Fed. 791, 3 U. S. App. 414; (1881) Hammerschlag v. Garrett (C. C.) 9 Fed. 43; (1881) Spring v. Domestic Sewing Mach. Co. (C. C.) 9 Fed. 505; (1881) Meyer v. Goodyear India Rubber Glove Mfg. Co. (C. C.) 11 Fed. 891; (1882) American Ballast Log Co. v. Cotter (C. C.) 11 Fed. 728; (1883) McCloskey v. Hamill (C. C.) 15 Fed. 750; (1888) Hancock Inspirator Co. v. Regester (C. C.) 35 Fed. 61; (1889) American Bell Tel. Co. v. Wallace Electric Tel. Co. (C. C.) 37 Fed. 672; (1889) Macbeth v. Gillinder (C. C.) 54 Fed. 169; (1891) National Cash Register Co. v. American Cash Register Co. (C. C.) 47 Fed. 212; (1891) Enterprise Mfg. Co. v. Deisler (C. C.) 46 Fed. 854; Same v. Wanamaker, Id.; (1894) Edison Electric Light Co. v. Philadelphia Trust, Safe Deposit & Insurance Co. (C. C.) 60 Fed. 397; Same v. Manufacturers' Club of Philadelphia, Id.; Same v. Spreckels Sugar Refining Co., Id.; (1895) Office Specialty Mfg. Co. v. Winternight & Cornyn Mfg. Co. (C. C.) 67 Fed. 928.

[b] (U. S. 1874) No federal Circuit Court is bound to follow the decisions of the courts of other circuits, but where a patent has been sustained in the federal Circuit Courts of four different circuits, and no appeal from the de-

cision has been taken in either case, a strong presumption arises that the parties were satisfied with the soundness of the decisions; and it is incumbent on the parties who seek to bring another court to a different conclusion to point out indisputable grounds for it.—Blake v. Robertson (C. C.) Fed. Cas. No. 1,501, affirmed in (1876) 94 U. S. 728, 24 L. Ed. 245.

[c] (U. S. 1905) The courts of one circuit are not controlled by the views taken with regard to a patent by the courts of another, nor absolved from an independent examination of the questions involved; such decisions being simply entitled to proper deference, as those of courts of equal standing and authority.—(1903) Cimiotti Unhairing Co. v. American Fur Refining Co. (C. C.) 120 Fed. 672, reversed American Fur Refining Co. v. Cimiotti Unhairing Mach. Co. (1903) 59 C. C. A. 357, 123 Fed. 869, which is affirmed (1905) 198 U. S. 399, 25 Sup. Ct. 697, 49 L. Ed. 1100, 1105, 116 O. G. 1452.

[d] (U. S. 1892) The fact that the judiciary act of March 3, 1891, took away the appellate jurisdiction of the Supreme Court in patent cases did not extinguish the doctrine of comity between Circuit Courts, so as to diminish the weight which should be given to a prior decision in another circuit in relation to the same patent.—American Paper Pail & Box Co. v. National Folding Box & Paper Co., 2 C. C. A. 165, 51 Fed. 229, 1 U. S. App. 283; Overman Wheel Co. v. Curtis (C. C.) 53 Fed. 247.

[e] (U. S.) In patent causes, where an issue has once been passed upon by a Circuit Court, it is only in a case of clear mistake of law or fact, of newly discovered testimony, or upon some question not considered by the court, that a Circuit Court sitting in another district is at liberty to review the findings, and it will not do so merely because there is doubt as to whether the patent in issue has been anticipated, when that question has been previously passed upon.—(1882) Searls v. Worden (C. C.) 11 Fed. 501; (1893) Heaton-Peninsular Button Fastener Co. v. Elliott Button Fastener Co. (C. C.) 58 Fed. 220.

[f] (U. S. 1882) Where issues have been often presented, discussed, and decided in co-ordinate courts, agreeing in the construction of a particular patent, unless new features in the case distinguishing it from cases elsewhere were adjudicated, the decisions of such co-ordinate courts should be accepted as final until the Supreme Court have had an opportunity to review and reverse their judgment.—Green v. French (C. C.) 11 Fed. 591.

[g] (U. S. 1888) Letters No. 333,862, granted January 5, 1886, to Joshua Kidd, for a "carbureting attachment for gas fixtures," having been held void for want of novelty, by a Circuit Court in another circuit, this court considers itself bound by its decision.—Kidd v. Ransom (C. C.) 35 Fed. 588.

[h] (U. S. 1889) While one court will ordinarily, as matter of comity, defer to the opinion of another court of co-ordinate jurisdiction with regard to the validity of a patent, it is too late to call upon it to do so after it has come to a different conclusion, and entered a decree in ignorance of the prior adjudication.—Consolidated Roller Mill Co. v. George T. Smith Middlings Purifier Co. (C. C.) 40 Fed. 305.

[i] (U. S. 1891) In proceedings for infringement of letters patent, where their validity is put in issue on the grounds of want of inventive novelty and of prior use, a prior decree of the court in other proceedings, involving the same issue, sustaining the patent, will be conclusive, under the doctrine of stare decisis, notwithstanding the action is against a different defendant.—Zinsser v. Krueger (C. C.) 45 Fed. 572.

[j] (U. S. 1892) Where two decisions are rendered in another circuit, in regard to the validity of a patent, one overruling the other on rehearing, the last will be followed, as the final conclusion of that court.—Brown Mfg. Co. v. Mast (C. C.) 53 Fed. 578.

[k] (U. S. 1892) Where a court issues an injunction to prevent infringement of a patent solely upon the authority of a decision in another circuit in a suit between the same parties, it will, on a motion for an attachment for contempt in violating the injunction, follow the construction which was placed upon the patent in such other circuit.—Accumulator Co. v. Consolidated Electric Storage Co. (C. C.) 53 Fed. 793.

[l] (U. S. 1893) In a suit for infringement of a patent, where it appears that the courts of other circuits have already sustained the validity of the patent as against all the defenses now made save that of anticipation by reason of certain patents not before in evidence, and have also found that defendants

infringed, the court will accept those decisions, and examine only the anticipation alleged.—National Folding Box & Paper Co. v. Phœnix Paper Co. (C. C.) 57 Fed. 223.

[m] (U. S. 1893) Adjudications establishing the validity of a patent, after litigation, though not controlling a Circuit Court in another circuit, authorize it to find the patent valid in a suit for infringement involving the same questions of fact and law without re-examining the questions at length.—Edison Electric Light Co. v. Packard Electric Co. (C. C.) 61 Fed. 1002.

[n] (U. S. 1900) Where Circuit Courts and the Circuit Court of Appeals in one circuit, in a number of decisions, have uniformly sustained the validity of a patent, in the absence of conflicting decisions elsewhere a Circuit Court of another circuit will follow such decisions, unless new matters of defense are presented; and the rule being one of comity and expediency, to secure uniformity of decision, and not one of law, the complainant in a later suit will not be required to produce strict legal proof, by the introduction of a full transcript of the record in the former suits, to show that the same anticipating patents and publications were relied on and considered therein, but such fact may be shown by the opinions filed, and by the testimony of witnesses shown to have knowledge.—New York Filter Mfg. Co. v. Jackson (C. C.) 112 Fed. 678.

[o] (U. S. 1900) Under the rule in the Seventh circuit, decisions of the courts of other circuits on the questions of validity or infringement of a patent will not be followed, but each case must be determined on its merits, as disclosed by the record therein, giving weight to the decisions of other courts only to the extent that their reasoning may be persuasive as applied to the facts presented by such record.—Welsbach Light Co. v. Cosmopolitan Incandescent Gaslight Co. (C. C.) 100 Fed. 648.

[p] (U. S. 1905) Prior decisions sustaining a patent are to be given effect under the rule of comity only as to matters which were before the court. With respect to defenses or evidence not before the court the action of the court in a subsequent case is purely original.—Bragg Mfg. Co. v. City of New York (C. C.) 141 Fed. 118.

V. United States Circuit Courts of Appeals.

1. In General.

[a] (U. S. 1907) Two Circuit Courts of Appeals reached differing conclusions in cases involving the same question, and another like case was presented to the court making the earlier decision. *Held* that, unless the court is persuaded by the decision of the other court that its former conclusion was wrong, the better course is for it to adhere to its former ruling, leaving it to the Supreme Court to secure uniformity by determining which of the conflicting decisions is correct. Judgment (C. C. 1905) 144 Fed. 704, affirmed.—(1906) Henry E. Frankenberg Co. v. United States, 76 C. C. A. 514, 146 Fed. 63, judgment affirmed 206 U. S. 224, 27 Sup. Ct. 628, 51 L. Ed. 1034.

[b] (U. S. 1907) In accordance with the practice in this circuit to follow the decisions of other Circuit Courts of Appeals whenever they may properly form a precedent, Eidman v. Tilghman, 136 Fed. 141, is followed on a question of the construction of the statutes with reference to the war revenue tax on legacies.—Gill v. Austin, 84 C. C. A. 677, 157 Fed. 234.

[c] (U. S. 1908) An appellant is entitled to the independent consideration and judgment of a Circuit Court of Appeals in one circuit, though the question presented has been adversely decided by another Circuit Court of Appeals.—Heckendorn v. United States, 89 C. C. A. 165, 162 Fed. 141.

[d] (U. S. 1908) This Circuit Court of Appeals will ordinarily concur in the decisions of Circuit Courts of Appeals in other circuits.—United States v. F. A. Marsily & Co., 91 C. C. A. 220, 165 Fed. 186.

[e] (U. S. 1909) The rule repeated that the Circuit Court of Appeals for the First Circuit will follow decisions of the Circuit Courts of Appeals in other circuits whenever they can form a precedent, unless under especially exceptional circumstances; and this practice followed with reference to Westhus v. Union Trust Co., 164 Fed. 795, decided in the Eighth circuit, relating to the liability of a collector for a legacy tax paid under protest, which, if followed, would involve a conflict of results for which there would be no remedy. Judgment (C. C. 1908) Conant v. Kinney, 162 Fed. 581, affirmed.—Kinney v. Conant, 92 C. C. A. 410, 166 Fed. 720.

2. In Patent Cases.

[a] (U. S. 1900) A Circuit Court of Appeals is not bound to affirm an order of a Circuit Court which, upon the ground of comity, followed the decision of the Circuit Court of Appeals of another circuit with reference to the validity and scope of a patent, but may investigate the matter of the validity and scope of the patent for itself, since comity is not a rule of law, but simply a rule of expediency. Decree, Stover Mfg. Co. v. Mast, Foos & Co. (1898) 32 C. C. A. 231, 89 Fed. 333, affirmed.—Mast, Foos & Co. v. Stover Mfg. Co., 177 U. S. 485, 20 Sup. Ct. 708, 44 L. Ed. 856.

[b] (U. S. 1901) As a general rule, and especially in patent cases, for the purpose of according to a patent the same recognition throughout the country, as contemplated by law, the decision of a Circuit Court of Appeals of another circuit should be followed with respect to the issues determined, if based on substantially the same state of facts. Decree (C. C. 1897) 82 Fed. 916, modified.—(1899) Beach v. Hobbs, 34 C. C. A. 248, 92 Fed. 146, 87 O. G. 1960; Hobbs v. Beach, Id. Affirmed 180 U. S. 383, 21 Sup. Ct. 409, 45 L. Ed. 586, 94 O. G. 2357.

[c] (U. S.) On appeal from an order enjoining infringement of a patent pendente lite, where the question of invention is presented with approximate accuracy upon the face of the patent, and does not depend upon controverted questions of fact, the Circuit Court of Appeals, giving due weight to a prior adjudication sustaining the patent, may re-examine such former adjudication, and dispose of the question in accordance with its own conviction.—(1892) American Paper Pail & Box Co. v. National Folding Box & Paper Co., 2 C. C. A. 165, 51 Fed. 229, 1 U. S. App. 283; (1893) Curtis v. Overman Wheel Co., 7 C. C. A. 493, 58 Fed. 784, 20 U. S. App. 146.

[d] (U. S. 1900) In patent cases the decision of the Circuit Court of Appeals of another circuit upon final hearing should be followed with respect to the issues determined, if based upon substantially the same state of facts, although the defendants are not the same, or in privity, unless it clearly appears that there was manifest error, especially where such decision has stood for a number of years.—Hatch Storage Battery Co. v. Electric Storage Battery Co., 41 C. C. A. 133, 100 Fed. 975.

[e] (U. S. 1900) Where one court has thoroughly examined a patented device, and has found the patent invalid on its face, or in view of the prior art, another court should not be asked, in a new and independent suit, to exhaustively examine and discuss the same questions, without some reason shown. —(C. C. 1899) Cutter Electrical & Manufacturing Co. v. Anchor Electric Co., 97 Fed. 804, decree affirmed 41 C. C. A. 246, 101 Fed. 120.

(173 Fed. 471.)

AMERICAN TRUST CO. v. W. & A. FLETCHER CO.

BERWIND-WHITE COAL MINING CO. v. SAME.

(Circuit Court of Appeals, First Circuit. August 18, 1909.)

Nos. 821, 822.

1. MARITIME LIENS (§§ 60, 74*)—JURISDICTION—FEDERAL AND STATE COURTS.

(1) For foreign repairs and supplies for a vessel there arises a lien, apart from statute, enforceable in rem in a court of admiralty, and not so enforceable in the state courts. (2) For domestic repairs and supplies there is no lien, apart from statute, except a possessory lien; but a state statute may give a maritime lien for them, enforceable in rem in a court of admiralty, and not so enforceable in the state courts. (3) For construction there is no lien apart from statute; but a state statute may give a lien, not ordinarily enforceable, in rem or otherwise, in a court of admiralty, but enforceable in the state courts by proceedings which are undistinguishable from proceedings in rem, and also enforceable under certain conditions in federal courts.

[Ed. Note.—For other cases, see Maritime Liens, Cent. Dig. §§ 98, 111; Dec. Dig. §§ 60, 74.*

Liens created by state laws, see note to The Electron, 21 C. C. A. 21.]

2. SHIPPING (§ 32*)—MORTGAGE OF VESSELS—AFTER-ACQUIRED PROPERTY CLAUSE.

A mortgage given by a steamship company, covering all the vessels it then owned and all it should afterwards acquire, cannot bind after-acquired vessels, as against liens given by statute for their construction.

[Ed. Note.—For other cases, see Shipping, Cent. Dig. §§ 105, 106; Dec. Dig. § 32.*]

3. MARITIME LIENS (§ 71*)—STATUTORY LIENS—SCOPE AND MODE OF ENFORCEMENT.

Gen. St. N. J. 1895, p. 1960 (Act March 20, 1857 [P. L. p. 382]; Act March 20, 1878 [P. L. p. 158]; Act April 24, 1884 [P. L. p. 248]), which provides that a debt contracted for the building, repairing, fitting, furnishing, or equipping of a vessel "shall be a lien upon such ship or vessel * * * and continue to be a lien on the same until paid," as construed by the courts of the state, creates a positive lien, enforceable in any court of equity by appropriate proceedings; the procedure prescribed therein not being exclusive.

[Ed. Note.—For other cases, see Maritime Liens, Cent. Dig. § 109; Dec. Dig. § 71.*]

4. MARITIME LIENS (§§ 17, 74*)—STATUTORY LIENS—CONSTRUCTION OF VESSEL—ENFORCEMENT OF LIEN.

Gen. St. N. J. 1895, p. 1960 (Act March 20, 1857 [P. L. p. 382]; Act March 20, 1878 [P. L. p. 158]; Act April 24, 1884 [P. L. p. 248]), which makes a debt contracted for the building of a vessel a lien thereon, which shall continue a lien until paid, is constitutional and valid, and applies to vessels owned outside of the state, but the unfinished hulls of which were brought therein for completion by equipment with machinery, and gives the builder a right of property in such vessels, which follows them into another jurisdiction, and is there enforceable according to the rules of the chancery courts, where the statute is not in conflict with the public policy of the state in which it is so sought to enforce it.

[Ed. Note.—For other cases, see Maritime Liens, Cent. Dig. §§ 22, 111; Dec. Dig. §§ 17, 74.*]

Appeals from the Circuit Court of the United States for the District of Maine.

For opinion below, see 166 Fed. 782.

Avery F. Cushman (Elmer P. Howe and William A. Sargent, on the brief), for appellant American Trust Co.

Alfred H. Strickland, for appellant Berwind-White Coal Mining Co.

Harrington Putnam and Edward S. Dodge, for appellee W. & A. Fletcher Co.

Brandeis, Dunbar & Nutter and Robinson, Biddle & Benedict, amici curiæ.

Before COLT and LOWELL, Circuit Judges, and BROWN, District Judge.

LOWELL, Circuit Judge. The Steamship Company, a Maine corporation, being concerned in the operation of steamships, on May 16, 1905, mortgaged its property to the Trust Company, a corporation of Massachusetts. This mortgage was stated to cover after-acquired property. It was recorded in the custom house at Bath, Me. At some time in 1905 or 1906 the Steamship Company contracted for

the building of the steamers Yale and Harvard. The hulls were constructed in Pennsylvania, and were afterwards brought at different times to the Fletcher Company's yard at Hoboken, N. J., where, under contract between the Steamship Company and the Fletcher Company, they were supplied with engines and other machinery and fittings. Before they were completed they were enrolled in Bath, Me.; the Yale on May 23, 1907, and the Harvard on August 12th. On May 25, 1907, the Yale was expressly conveyed by the Steamship Company to the Trust Company by an instrument making it subject to the mortgage of 1905. This instrument was immediately recorded at Bath. The Harvard was conveyed by a like conveyance, likewise recorded. The steamers were thereafter fitted up and employed in navigation, but there remained a balance for work done upon them, due from the Steamship Company to the Fletcher Company. A creditors' bill was filed against the Steamship Company January 29, 1908, in the Circuit Court for the district of Maine, and a receiver was appointed by that court. Ancillary proceedings were had in Massachusetts and in the Southern district of New York. The receiver took possession of the Yale and Harvard, which were then laid up at Boston, Mass., for the winter of 1907–08. In the summer and autumn of 1908 they were run by the receiver between Boston and New York. The Fletcher Company brought a petition in the Circuit Court for Maine to enforce a lien alleged to arise in its favor upon the Yale and Harvard under the statutes of New Jersey. In that proceeding the Trust Company intervened, as claiming rights in the steamers superior to those of the Fletcher Company. The Fletcher Company's petition was thus resisted, both by the mortgage creditor and by unsecured creditors. The Circuit Court granted the prayer of the petition, and the Trust Company brought the case here by way of appeal.

The case before us is concerned with an alleged lien upon vessels. At the risk of declaring commonplaces, we start from first principles. At common law the builder or repairer, like other mechanics, had a possessory lien upon the ship. "A shipwright, indeed, who has taken a ship into his own possession to repair it, is not bound to part with the possession until he is paid for the repairs, any more than any other artificer. But if he has once parted with the possession, or has worked upon it without taking possession, he is not deemed a privileged creditor, having any claim upon the ship itself." The General Smith, 4 Wheat. 438, 443, 4 L. Ed. 609. The objection supposed to lie against secret liens is not applicable to these possessory liens. They are not secret, as they are advertised by the lienor's possession. The purchaser of the chattel takes title subject to them. By the maritime law, on the other hand, a lien existed for the construction, supply, and repair of a vessel having an application more extended. It was not possessory. Indeed, the maritime lien was deemed to be given in order that a vessel might go on its way unembarrassed by the lienor's attempt to obtain immediate payment. The origin of this lien we need not investigate. Where it exists, it prevails over the rights of a bona fide purchaser for value. It follows the ship apart from possession. It is not divested by a subsequent sale. It may prevail even over a

prior sale or mortgage, and it has a fixed order of preference in payment as compared with other maritime liens, such as those for seamen's wages, general average or collision. It has the inconvenience of a secret lien, but the policy of the law deems the inconvenience less important than the advantage which the lien secures to navigation.

The general maritime lien for construction, repairs, and supplies has been recognized very imperfectly by the law of England, and even by that of the United States. In the English courts questions of jurisdiction were long confused with questions of substantive law, until all difference was lost sight of. Even the courts of the United States, though having a broader knowledge of the admiralty law, did not emerge at once from English limitations and inconsistencies. See the historical remarks in The Underwriter (D. C.) 119 Fed. 713. All refinements of the Anglo-American doctrine being laid aside, the lien is held to exist here only for supplies furnished in a foreign port, those which we may call for convenience foreign repairs and supplies. In respect of these, the lien has the incidents of the maritime lien above described.

The convenience and justice of a lien for the construction of a vessel and for its domestic repair and supply have been so generally recognized, however, that many of the states, by statute, have given a lien to the builder and to the domestic repairer and supply man. Stimson's American Statute Law, § 4643. These statutes vary considerably in the nature and rank of the lien given. Many of them require some record in order that the lien may be preserved. Ordinarily the work must be done within the state (McDonald v. The Nimbus, 137 Mass. 360); but not always (Ward v. Willson, 3 Mich. 1). In all cases, however, the lien exists apart from possession. The effect given by the federal courts to state statutes, fixing liens upon a vessel, is anomalous. The contract for domestic repairs and supplies is said to be maritime, though of itself it creates no maritime lien. The state statute, operating on the maritime contract, is held to create a maritime lien, enforceable in a court of admiralty by its peculiar process, and of equal rank with the strictly maritime lien for foreign supply and repairs given by the admiralty law. Jones on Liens, § 1772. Like the latter, it is unconnected with possession, enforceable without regard to the locality of the court, and indestructible by private sale. It imports a tacit hypothecation of the vessel, it is a jus in re, it accompanies the property into the hands of a bona fide purchaser, and it is enforceable in a court of admiralty by process in rem. Whatever be the provisions of the state statute, they cannot be made effective to give a state court jurisdiction to enforce this lien by proceedings of this sort. A proceeding by way of attachment, summons to the owner, if known, and sale of the vessel thereunder, has been held to be thus excluded from the state courts in the enforcement of a lien for domestic repairs and supplies. "The form of proceeding against the vessel, provided for in the statute of Massachusetts, now in question, is clearly in the nature of admiralty process in rem, and is undistinguishable from the proceedings, provided for in statutes of other states, which have been held by this court

to be exclusively within the admiralty jurisdiction of the courts of the United States. The lien upon the vessel is created as soon as the money is due for labor performed or materials furnished, and continues until the debt is satisfied, unless the lien is dissolved by failure to record a statement of the claim, as required by statute. The petition is to be served by an attachment of the vessel, and a summons to the owners, if known. A dissolution of the attachment does not dissolve the lien, and any number of persons having such liens upon the same vessel may join in one petition to enforce them." The Glide, 167 U. S. 606, 623, 17 Sup. Ct. 930, 936, 42 L. Ed. 296.

The cause of the want of jurisdiction in the state courts to enforce by process in rem the lien for domestic supplies should be noted. That a state statute cannot provide for this enforcement in a state court arises, not from any general infirmity in the statute, but solely because of the exclusive gift to the federal courts of judicial power in "all cases of admiralty and maritime jurisdiction." Where this exclusive federal jurisdiction exists, it necessarily ousts the jurisdiction which would have otherwise been enjoyed by the state courts. Jurisdiction in the state courts is excluded only so far as the federal Constitution gives it exclusively to the federal courts. Knapp v. McCaffrey, 177 U. S. 638, 648, 20 Sup. Ct. 824, 44 L. Ed. 921. Where exclusive jurisdiction does not exist in the federal courts, it may exist in the courts of a state. Thus the contract for domestic supplies may be enforced in the state courts by an ordinary action for breach of contract, and, theoretically, the lien which the statute causes to arise out of the contract may also be enforced in the state courts by proceedings not in rem. But the method of enforcing the lien in a court of admiralty is so much more effective than the method allowed to the state courts that the former has become practically exclusive.

Concerning the statutory lien for the construction of a vessel, the federal courts have reached a different conclusion from that reached concerning the statutory lien for domestic repairs and supplies. The contract itself is not deemed to be maritime, and so neither the lien nor the contract is ordinarily enforceable in an admiralty court. Edwards v. Elliott, 21 Wall. 532, 22 L. Ed. 487. But the statutory lien for construction is nevertheless valid. As the federal court of admiralty is here without jurisdiction, it follows that, upon the principles above stated, the lien is enforceable in the state courts. This enforcement may be by a proceeding so closely resembling a process in rem that the state courts are excluded from a like remedy in the enforcement of a lien for domestic repairs and supplies given by the same state statute as that which gives a lien for construction. Where exclusive federal jurisdiction does not exist, a state statute may give jurisdiction of a like remedy to a state court.

To recapitulate: (1) For foreign repairs and supplies there arises a lien, apart from statute, enforceable in rem in a court of admiralty, and not so enforceable in the state courts, whether expressly given by statute or otherwise. (2) For domestic repairs and supplies there is no lien, apart from statute (except the possessory lien); but a state statute may give a maritime lien for them, enforceable in rem in a

court of admiralty, and not so enforceable in the state courts. (3) For construction there is no lien, apart from statute; but a state statute may give a lien, not ordinarily enforceable, in rem or otherwise, in a court of admiralty, but enforceable in the state courts by proceedings which are undistinguishable from proceedings in rem. Even a federal court is not altogether excluded from the enforcement of a statutory lien for the construction of a vessel. If the vessel has been libeled, and sold by a court of admiralty in the enforcement of a maritime claim, the surplus, after satisfying the maritime claim, will be handed over to the person entitled thereto. In the distribution of this surplus the court recognizes claims and liens other than maritime, such as pledges, mortgages, and statutory liens for construction. The Guiding Star (D. C.) 9 Fed. 521, s. c. on appeal (C. C.) 18 Fed. 263; The Maud Carter, 29 Fed. 156. On the ground of diversity of citizenship, a suit to enforce the statutory lien for construction may be brought in the Circuit Court or removed thereto. The Winnebago, 141 Fed. 945, 73 C. C. A. 295; Id., 142 Mich. 84, 105 N. W. 527, 113 Am. St. Rep. 566; Id., 205 U. S. 354, 27 Sup. Ct. 509, 51 L. Ed. 836.

A lien for the construction of a vessel, given by a statute of New Jersey, may therefore be enforceable, not only in the state courts of New Jersey, but, under some conditions, in federal courts sitting within that state. We have here to consider the effect, the enforceability, and the rank of such a lien in other jurisdictions.

Before considering these questions, however, we will deal with certain preliminary matters in the case at bar, insisted on by one side or the other. The Trust Company contended that before the Fletcher Company's lien arose the vessels were covered, as they came into existence, by the mortgage of 1905, which mentioned after-acquired property. Without asserting that this would help the Trust Company here, even if true, we may observe shortly that the contention is not supported by the facts. The vessels came into existence already subject to a lien for their construction. Work had been done in their construction, indeed, before the Fletcher Company's work was applied; but for their existence as vessels the Yale and Harvard required not only hulls, but also machinery and other fittings, and, as that machinery was supplied them, the lien of the Fletcher Company attached. The work and material thus supplied by the Fletcher Company were needed "to bring her [the vessel] into existence as a complete entity." The Victorian, 24 Or. 121, 132, 32 Pac. 1040, 1042, 41 Am. St. Rep. 838. The after-acquired property, which the mortgage was expressed to cover, came into existence, and therefore into acquisition affected with a lien. Even if the provision in the mortgage was effectual for any purpose, it was not effectual to obtain priority over the Fletcher Company's lien.

There was discussion at the argument of the scope and intent of the New Jersey statute giving the lien. Gen. St. N. J. 1895, p. 1960 (Act March 20, 1857 [P. L. p. 382]; Act March 20, 1878 [P. L. p. 158]; Act April 24, 1884 [P. L. p. 248]). The Trust Company urged that these statutes were not intended to create a lien, properly so

called, but only a method of attachment by mesne process. But the statute first declares the existence of the lien as such, and its duration and rank. Only after this has been done is a remedy for its enforcement provided in later sections of the statute. Again, section 39 shows that the lien has validity apart from the statutory provisions for its enforcement. The limitations upon enforcement are not to "be construed to impair the validity of any liens created by this act, the payment of which shall be decreed in any court of the United States." Some liens created by the New Jersey statute, and for which a method of enforcement is provided therein, are yet enforceable by proceedings other than those according to the statute. This is certainly true of liens for supplies furnished in New Jersey to vessels of New Jersey. These liens are enforceable in a court of admiralty by its peculiar process, without regard to the remedy given by the statute. The remedy given by the statute is, therefore, not exclusive. Even a court of admiralty itself, in exceptional circumstances, as we have seen, may proceed to enforce the lien for construction here in question.

That the statutory method of enforcing the lien is not exclusive has been decided by the courts of New Jersey. In Russell v. Myers, 67 Atl. 1016, the Court of Chancery of New Jersey recognized the lien for supplies given by this statute as binding a fund in the hands of its receivers. The fund arose from the sale of the vessel by order of the court of admiralty sitting in New York, and it is manifest that the New Jersey Court of Chancery enforced the lien without recourse to the elaborate proceedings provided by the statute. The lien was "enforceable [in the Court of Chancery] in all other ways in which a court of equity can act in regard to such matters." Page 1018. And it is described as "a property right which all courts, both state and federal, must recognize." As the lien for construction and that for supplies are given by the same clause of the New Jersey statute, their character is the same. No case has been found in New Jersey which in any way contradicts this exposition of the statute. So far as the Legislature of New Jersey can bring about the result, it has given to the Fletcher Company a lien upon the Yale and Harvard, which is enforceable in the Circuit Court for the district of Maine. We agree with both the reasoning and the conclusion of the learned judge of the Circuit Court in holding that this lien has not been waived or lost by the lienor's laches. The Trust Company alleged knowledge by the Fletcher Company of the Trust Company's rights; but the knowledge, if there was any, did not precede the lien.

We come, then, to answer the question stated above: Is this statutory lien enforceable in the Circuit Court for the district of Maine as the court of a jurisdiction foreign to that of New Jersey? Would it be enforceable in the state courts of Maine?

As the vessels were in New Jersey when the lien arose by virtue of the New Jersey statute, we agree with the New Jersey court that a right of property therein was created by the Legislature of New Jersey, that the Legislature intended to create this right, we have shown already, and that the Legislature was not forbidden by the Constitution of the United States to create this right of property, we

regard as settled by the decisions of the Supreme Court. Jurisdiction to enforce the nonmaritime lien for construction by a state court is held to be analogous to jurisdiction to enforce a maritime lien for supplies by a federal court of admiralty.

The owner of the Yale and Harvard, it is true, was a Maine corporation, and for some purposes the domicile of the owner draws to it the situs of personal property. But we are of opinion that this fiction is inapplicable in the case at bar. The fiction is controlled by the right of the jurisdiction within which the personal property is situated to determine the effect of those acts of the parties which transfer or affect its ownership. From the standpoint of a court sitting in Maine, this is not the case of a lien which arose upon a domestic, as distinguished from a lien which arose upon a foreign, vessel. The lien first attached in New Jersey to something which was not then a vessel, though it subsequently became one.

The right of property arising in New Jersey from a lien given by its statutes is not divested by removal of the property from New Jersey. The lien thus attaching is not limited in its application or enforcement to the state which created it. Dicey on Conflict of Laws, p. 530. Rights which have once validly attached to personal property, so as to qualify its ownership, do not ordinarily disappear, either temporarily or permanently, when the property is removed to another jurisdiction. Hornthall v. Burwell, 109 N. C. 10, 13 S. E. 721, 13 L. R. A. 740, 26 Am. St. Rep. 556. A mortgage is still a mortgage, a lien is still a lien, though the property has been removed from New Jersey to Maine. The Maud Carter (D. C.) 29 Fed. 156.

As the lien became valid at its origin in New Jersey, because of the control of New Jersey over property within its limits, so a like control by another state over personal property removed thither may subordinate or modify the effect of a property right arising in the first state. As to the effect of transactions occurring in the second state after removal of the property thereto, its law ordinarily controls. Thus, in Walworth v. Harris, 129 U. S. 355, 9 Sup. Ct. 340, 32 L. Ed. 712, the Supreme Court held that a lien created by the statutes of Arkansas upon personal property there situated was afterwards subordinated to a lien created by the laws of Louisiana, into which latter state the property had been removed. This pre-eminence of the Louisiana law was recognized, it seems, even by a federal court sitting in Arkansas.

In The Roanoke, 189 U. S. 185, 23 Sup. Ct. 491, 47 L. Ed. 770, the Supreme Court held unconstitutional a state statute which purported to give a lien upon a foreign ship for supplies furnished to a contractor, because the statute was an unconstitutional interference with interstate commerce. But the lien here in question did not arise in the course of the commercial life of the vessel. It came into existence before the structure which is now a vessel had become an instrument of commerce. As we shall hereafter observe, we have here before us no conflict between this statutory lien and such a maritime lien as may be deemed an incident of commerce within the federal control. The Supreme Court has held a lien like that here in ques-

tion to be valid, and we are now considering, not the admitted validity of the lien, but its extent and application. In The Katie, Fed. Cas. No. 14,342, the Circuit Court for the district of Louisiana held, indeed, that a statutory lien for construction is postponed to a subsequent mortgage duly recorded under Rev. St. § 4192 (U. S. Comp. St. 1901, p. 2809). In so far as the state statute would subordinate the mortgage to the lien, it was held an unconstitutional interference with the congressional regulation of interstate commerce. Apparently the lien was deemed valid; but the mortgage was deemed a lien of higher rank. With the latter proposition we find ourselves unable to agree. The federal statute cited was not, in our opinion, intended to cut off rights of property existing in the vessel at the time of the mortgage, or to give the mortgagee greater rights than those of the mortgagor. It is to be observed that the case cited would subordinate the lien to a mortgage in a court of New Jersey as well as in a court of Maine. The federal statute concerning the mortgage of vessels engaged in interstate commerce is as effective in the state of their situs and ownership as elsewhere. In Donald v. Hewitt, 33 Ala. 534, 73 Am. Dec. 431, a lien both statutory and expressly contracted for had attached to property while in Kentucky. The property was removed into Alabama, and the Alabama court held that the statutory lien of Kentucky was outranked by a subsequent lien arising in Alabama. The same court, however, held that the lien arising in Kentucky by the express terms of the contract made there created an equitable mortgage, which was held superior to the subsequent lien arising in Alabama. The decision appears to overlook the fact that the lien in the case at bar, though given by statute, yet arises out of the contract, and could not exist without it. Fuller v. Nickerson, 69 Me. 228, 236; Mehan v. Thompson, 71 Me. 492. The contract of construction was made with reference to the statute, and a verbal incorporation of the statute into the terms of the contract, expressing in the language of the parties that which the Legislature has declared to be the law, must be an empty formality.

We hold, therefore, that the lien here in question was enforceable by the Circuit Court sitting for the district of Maine. In so holding, we would guard ourselves from certain conclusions which have been supposed to follow from the result we have reached.

We do not decide that the New Jersey lien would be enforceable in the courts of Maine, if the policy of the lien were in conflict with the public policy of the state, as declared by statute or judicial decisions. In some cases a state may recognize, or refuse to recognize, at its option, a statutory right created elsewhere. Texas & Pac. R. R. v. Cox, 145 U. S. 593, 605, 12 Sup. Ct. 905, 36 L. Ed. 829. The statute of Maine, which gives a lien for the construction of a vessel, differs indeed from the New Jersey statute before this court; but the lien given by the Maine statute, though more narrowly limited in respect of its endurance and requiring other forms for its validity, is yet a lien of the same general sort, based upon a similar idea of public policy. In Maine, as in New Jersey, the lien for the construction of a

vessel has priority over a mortgage. Perkins v. Pike, 42 Me. 141, 66 Am. Dec. 267.

We do not decide that this lien for construction, which we here recognize, is to be deemed superior or even equal to maritime liens. Whatever the statutes of New Jersey might provide, we do not suggest that they could give a lien for construction which would be of rank equal or superior to the maritime lien given for repairs and supplies. No conflict between these two kinds of lien arises in the present case.

The Trust Company contended that the recognition of the statutory lien would work great hardship to a mortgagee; but this hardship is not so great as that which arises everywhere out of maritime liens, which undoubtedly outrank either a prior or a subsequent mortgage. These maritime liens may arise in any port at which the vessel has touched, and the utmost diligence may often fail to discover them. The lien for construction can arise only where the vessel is built, and the building is seldom extended over more than two places, or three at the most, where the lien for construction is easily discovered.

In each case, the decree of the Circuit Court is affirmed, and the appellee recovers its costs of appeal.

(173 Fed. 480.)

In re AMERICAN KNIT GOODS MFG. CO.

(Circuit Court of Appeals, Second Circuit. July 2, 1909.)

No. 232.

1. SALES (§ 104*)—RESCISSION—RETURN OF BENEFITS.

A seller is only required to return benefits as a condition precedent to a rescission of the sale for misrepresentations, in an action at law when the rescission is the act of the seller; no such return being required where the rescission is asked of a court of equity, since in that case all equities will be protected by the decree.

[Ed. Note.—For other cases, see Sales, Cent. Dig. §§ 271–273; Dec. Dig. § 104.*]

2. SALES (§ 43*)—RESCISSION—MISREPRESENTATION—INTENT.

Misrepresentation of a material fact on which a seller relies in making a sale is ground for rescission, though the misrepresentation was innocent.

[Ed. Note.—For other cases, see Sales, Cent. Dig. § 87; Dec. Dig. § 43.*]

3. SALES (§ 46*)—RESCISSION—FINANCIAL STATEMENT—"QUICK ASSETS."

Where a corporation credit statement recited that the present mortgages did not cover any of the "quick assets" of the company, amounting to $635,165.35 in cash, merchandise, accounts receivable, etc., which, together with equities in real estate and machinery of $194,775.01, made the total assets $829,940.36, the term "quick assets" was used merely to distinguish liquid assets from those permanently invested in the business, like real estate and machinery, and included amounts charged against officers for return of part of salaries paid them in a previous year, in accordance with the agreement of employment.

[Ed. Note.—For other cases, see Sales, Cent. Dig. § 95; Dec. Dig. § 46.*

Misrepresentation and concealment by vendee of goods as to financial condition as affecting validity of contract of sale, see note to William Openhym & Sons v. Blake, 87 C. C. A. 126.]

4. SALES (§ 52*)—RESCISSION—BURDEN OF PROOF.

In a proceeding against a bankrupt's estate to recover merchandise on rescission of a contract of sale for alleged misrepresentation in a financial statement of the bankrupt's assets, the burden was on petitioner to show that the statement contained a material misrepresentation of fact on which petitioner relied.

[Ed. Note.—For other cases, see Sales, Cent. Dig. § 123; Dec. Dig. § 52.*]

5. SALES (§ 52*)—RESCISSION—FINANCIAL STATEMENT—FALSITY.

A court could not infer that a bankrupt's financial statement used as a basis for credit was false on February 28, 1905, because the bankrupt's assets realized very much less than the amounts called for in the statement when they came into the possession of the receiver in bankruptcy in August following.

[Ed. Note.—For other cases, see Sales, Cent. Dig. § 144; Dec. Dig. § 52.*]

Petition to Review and Appeal from Order of the District Court of the United States for the Eastern District of New York.

In the matter of the American Knit Goods Manufacturing Company, a bankrupt. On petition of Harding, Whitman & Co. for rescission of certain contracts of sale, and for the return of merchandise delivered to the bankrupts thereunder. The District Court denied the relief prayed (155 Fed. 906), and petitioner filed a petition to review, and appealed. Affirmed.

Hyman & Campbell (Thomas Thacher, of counsel), for appellants.

James, Schell & Elkus (Robert P. Levis, of counsel), for trustee respondent.

Einstein, Townsend & Guiterman, for bankrupt respondent.

Before LACOMBE, COXE and WARD, Circuit Judges.

WARD, Circuit Judge. This is a reclamation proceeding in bankruptcy. November 19, 1904, Harding, Whitman & Co., the petitioners, contracted to deliver to the American Knit Goods Manufacturing Company, the bankrupt, 150,000 pounds of worsted yarns in certain quantities in certain months. The yarn could not be spun until the Knit Goods Company furnished the necessary specifications. April 11, 1905, they made another contract for delivery of Oxford cotton yarn, and May 3d a third contract for delivery of B.B. cotton yarn. In February, 1905, the Knit Goods Company began negotiations for a reduction of the quantity of yarn to be delivered under the contract of November 19th. Harding & Co. took the position that the Knit Goods Company, because of failure to furnish the necessary specifications for the delivery of the amounts agreed on, was in default. During the pendency of these negotiations the Knit Goods Company, finding a readjustment of its affairs necessary, issued a statement to its creditors dated March 17, 1905, of its financial condition as of February 28th, and Katzenburg, one of its officers, handed it to Harding & Co.'s credit manager, accompanied by a memorandum of explanation. The statement showed as to assets an equity in real estate and machinery of $194,775.01 and other assets aggregating $635,165.35. The memorandum which accompanied the statement contained the following clause:

"The present mortgages do not cover any of the quick assets of the company amounting to $635,165.35 in cash, merchandise, accounts receivable, etc., which together with its equities in the real estate and machinery of $194,775.01 makes a total asset of $829,940.36."

These two papers were discussed by Harding & Co.'s credit manager and Katzenburg, in relation to the proposed modification of the contract of November 19, 1904. April 3, 1905, in reliance upon the statement of March 17, 1905, Harding & Co. agreed to modify the contract of November 19th, so as to reduce the quantity of yarn to be delivered to 75,000 pounds and made the other two contracts for delivery of cotton yarn dated April 11th and May 3d. August 7, 1905, a petition in bankruptcy was filed against the Knit Goods Company and it was adjudicated a bankrupt October 3d. All the worsted yarn delivered under the contract of November 19, 1904, prior to its modification April 3, 1905, had been paid for. Subsequent to the latter date yarn of the invoice value of $13,974.88 was delivered on which there was due a balance of $10,788.68. All the yarn on the contract of April 11th was delivered and paid for except the sum of $50.26. On the cotton yarn contract of May 3d there was due for cotton yarn delivered a balance of $4,441.27.

There was found in the hands of the receiver yarn delivered under these three contracts which had not been paid for as follows:

Worsted yarn under the contract of November 19, of the invoice value of	$8,358.69
Cotton yarn under the contract of April 11 of the invoice value of	50.26
Cotton yarn under the contract of May 3 of the invoice value of	4,441.27

The petitioners instituted these proceedings to have the three contracts rescinded, the unpaid-for yarn in the hands of the receiver returned to them, the balance of their claim for yarn unpaid for to be proved against the estate. The trustee objects that the petitioners are not entitled to rescission because they have not returned or offered to return what they have received from the bankrupt. This would be true in an action at law where the rescission was the act of the party, but it is not so in equity where rescission is asked for of the court. In the latter case all equities will be protected in the decree. Allerton v. Allerton, 50 N. Y. 670; Vail v. Reynolds, 118 N. Y. 297, 302, 23 N. E. 301.

The trustee also claims that the petitioners are not entitled to rescission because there is no evidence of any intentional misrepresentation by the bankrupt or its officers. This at least in equity is not necessary. The misrepresentation of a material fact upon which the other party relies, even if innocent, is good ground for rescission. Hammond v. Pennock, 61 N. Y. 145; Carr v. National Bank & Loan Co., 167 N. Y. 379, 60 N. E. 649, 82 Am. St. Rep. 725; Smith v. Richards, 13 Pet. 26, 36, 10 L. Ed. 42; Doggett v. Emerson, 3 Story, 700, Fed. Cas. No. 3,960; Kell v. Trenchard, 142 Fed. 16, 23, 73 C. C. A. 202.

We have accordingly to inquire whether there was in the statement of March 17th any misrepresentation of a material fact as to the financial condition of the Knit Goods Company of February 28th. The petitioners insist strenuously that the description in the memorandum accompanying the statement of March 17, 1905, of assets other than

the equity in real estate as "quick," amounts to a representation that these assets could be promptly realized at the stated amounts. The trustee, on the other hand, claims that the word "quick" was used merely to distinguish liquid assets from those permanently invested in the business, like real estate and machinery. Katzenburg, who prepared the statement and handed it to and discussed it with the petitioners' credit manager, says that is what he meant by the expression. We adopt this construction of the word as more reasonable than the construction contended for by the petitioners.

The petitioners further strenuously contend that, because the master in one of his findings stated that there was no "sufficient conclusive evidence" that the value of the merchandise on hand was not as stated in the statement, he required them to prove their case beyond a reasonable doubt, or with such completeness as would compel a trial judge to direct a verdict in their favor. The phrase was not a happy one, but it is clear to us that the master meant by it only that the evidence offered by the petitioners was not sufficient to convince him that there was a material error. This appears expressly in his second conclusion of law, in which he says:

> "Much testimony has been introduced tending to raise doubts as to the accuracy as to the items of merchandise and stock on hand and so on in the financial statement of March, 1905, but it seems to me that the petitioners have failed to prove by a preponderance of evidence that said item was materially false, nor that they have shown the falsity of any other item in the statement except as set forth in the findings of fact."

The master found that some of the assets mentioned in the statement and described in the memorandum accompanying it as "quick" were not quick, and also that the amounts charged against the officers on the books for return of part of the salaries paid them in the first year in accordance with the agreement of employment were not assets. We differ with him in these particulars, regarding the assets as being quick in the sense that they were not permanent investments like plant and machinery, and thinking that the claims against the officers for return of a proportion of their first year's salaries were assets.

In other respects we agree with the master and the court below that the petitioners have not sustained the burden of proof lying upon them to show that the statement of the bankrupt's financial condition as of February 28, 1905, contained any material misrepresentation of fact. The assets which came into the possession of the receiver August 7th realized very much less than the amounts called for as of February 28th, but we cannot infer from that circumstance that the statement was false.

Decree affirmed.

(173 Fed. 484)

REMMERS v. MERCHANTS'-LACLEDE NAT. BANK OF ST. LOUIS.

(Circuit Court of Appeals, Eighth Circuit. October 9, 1909.)

No. 3,000.

1. BANKRUPTCY (§ 408*)—PROCEEDINGS IN OPPOSITION TO DISCHARGE—SPECIFICATIONS OF OBJECTION.

A specification of objection to the discharge of a bankrupt on the ground that he made a false oath to his schedules is sufficient, where it alleged that such schedules contained no mention of certain stocks, or of any interest therein or claim against any third person on account of the same, but that shortly after the adjudication the bankrupt commenced a suit to recover such stocks from one to whom he alleged that he had pledged the same and claiming to be their owner; and proof of such allegations and of the bankrupt's ownership of the stocks subject to the rights of the alleged pledgee is sufficient to bar his right to a discharge.

[Ed. Note.—For other cases, see Bankruptcy, Cent. Dig. § 733; Dec. Dig. § 408.*]

2. BANKRUPTCY (§ 414*)—PROCEEDINGS IN OPPOSITION TO DISCHARGE—MEASURE OF PROOF.

To justify the denial of a bankrupt's discharge on the ground that he made a false oath to his schedules, the evidence must be of sufficiently clear and convincing character to overcome the presumption of his honesty; but it is not required to be of the high degree necessary to sustain a conviction for perjury.

[Ed. Note.—For other cases, see Bankruptcy, Cent. Dig. § 722; Dec. Dig. § 414.*]

3. BANKRUPTCY (§ 408*)—GROUNDS FOR REFUSAL OF DISCHARGE—FALSE OATH.

To justify the omission by a bankrupt of property from his schedule on the ground that he acted on advice of counsel, it must be shown that he fully and fairly stated the facts to his counsel, and acted on his opinion on a matter of law only.

[Ed. Note.—For other cases, see Bankruptcy, Cent. Dig. § 733; Dec. Dig. § 408.*]

Appeal from the District Court of the United States for the Eastern District of Missouri.

In the matter of Harry J. Remmers, bankrupt. On appeal from order refusing discharge. Affirmed.

Benjamin J. Klene, for appellant.

Charles M. Polk, for appellee.

Before SANBORN, Circuit Judge, and CARLAND and POLLOCK, District Judges.

POLLOCK, District Judge. This is an appeal from an order denying the application of appellant, Harry J. Remmers, a bankrupt, a discharge in bankruptcy. The facts are these:

Appellant was duly adjudged a bankrupt in an involuntary proceeding on April 25, 1903. On May 4th thereafter he made oath to his schedules of assets and liabilities, as provided by law, which were duly filed in the proceedings. Thereafter, in due time, the bankrupt filed his petition for discharge. To this petition appellee filed two written specifications of objections, namely: First, that the bankrupt, within four months next preceding the filing of a petition in bank-

ruptcy, had transferred, removed, and concealed some of his property and assets with intent to hinder, delay, or defraud his creditors, specifically setting forth the character of the assets and the time, manner, and form in which such act of the bankrupt was charged to have been committed. The second specification of objection, as amended, reads as follows:

"The undersigned charges, as a further reason why applicant's petition for a discharge should not be granted, that such applicant, on the 5th day of May, 1903, filed in this proceeding the schedules of his assets and liabilities required by law, said schedules being verified by the oath of the applicant as by law required; that said schedules do not contain any mention of 50 shares of the capital stock of the Goesse & Remmers Building & Contracting Company (a corporation), of the par value of $100 per share, or of 29 shares of the capital stock of the Carthage Marble & White Lime Company (a corporation), of the par value of $100 per share, or of any claim or chose in action against any parties with reference to said stock; that thereafter, and on, to wit, the 20th day of February, 1905, said applicant filed a suit to the April term, 1905, of the circuit court of the city of St. Louis, against Frederick J. Remmers, Otto Kulage, Joseph J. Kulage, and College Hill Press Brick Works, said cause being No. 36,269, and being now pending on appeal in the Supreme Court of Missouri, and said applicant alleges in his petition filed in said suit, and in his amended petition subsequently filed therein, that on the 19th day of July, 1902, he was the owner of the above-mentioned stocks, and that on said day and subsequent thereto said defendants conspired to cheat and defraud plaintiff of said stock; that said stock was transferred to defendant Otto Kulage as a pledge or hypothecation to secure the repayment of a loan of $8,000 and future advancements to be made, but that said defendants claimed that said transfer was a sale of said stock, and not a mere pledge thereof; that thereafter, and during the pendency of this proceeding in bankruptcy, a motion was filed by Messrs. Hey & Stewart, John B. Satterfield, and other creditors of applicant, praying that George D. Harris, Esq., trustee in bankruptcy herein, be removed; and that on the taking of testimony in said motion before Hon. Walter D. Coles, special master, on to wit, the 8th and 9th days of February, 1905, said applicant testified upon his oath that at the time of his adjudication in bankruptcy and of his filing said schedules, he was the owner of the above-mentioned stocks, or of some interest in same, or of some chose in action with reference thereto. Wherefore the undersigned charges that at the time of the making of his said inventory and schedules in this proceeding said applicant was the owner of some interest in said shares of stock, or of some chose in action with reference thereto, and that said applicant knowingly and with fraudulent intent made a false oath to his said inventory and schedules, in that he failed therein to make any mention of his ownership of or interest in or to the aforementioned shares of stock, or of some chose in action with reference thereto. Wherefore the undersigned prays that said applicant's petition for a discharge be denied."

To the sufficiency of these specifications of objections the bankrupt interposed no exceptions, but joined issue thereon by filing a general denial thereto. The referee in bankruptcy, as special master, took, read, and considered the proofs on issue so joined, and reported to the court, recommending the petition for discharge be denied on both specifications of objections made. On a hearing before the court on exceptions to this report, the exceptions were overruled, the recommendation of the master followed, and an order entered denying the petition on both grounds of objections made by the bank. From this order the bankrupt appeals.

The ground of error claimed by the bankrupt, in so far as the first specification of objection is concerned, challenges the sufficiency of

the proofs adduced to sustain the order made. A consideration of this branch of the case has compelled an examination of all the proofs found in the record touching the same; but, from the view we have taken of the entire case it becomes unnecessary to express an opinion on this branch. However, as said by Judge Philips (In re Stout [D. C.] 109 Fed. 794):

"It is the recognized rule of the federal courts—and especially in matters of bankruptcy—that on review of the decision of a referee, based upon his conclusions on questions of fact, the court will not reverse his findings, unless the same are so manifestly erroneous as to invoke the sense of justice of the court. In re Waxelbaum (D. C.) 101 Fed. 228. This rule must, of necessity, be observed by the courts, where the findings and conclusions of the referee are based upon conflicting testimony. He sees and hears the witnesses, and his vantage ground is much better than that of the court for determining the credibility of the witnesses and the weight of their testimony."

See, also, In re Noyes Bros., 127 Fed. 286, 62 C. C. A. 218.

Passing, then, to the errors assigned on the ruling of the court sustaining the second specification of objection, it is first insisted this specification is insufficient in form and substance to sustain the order made by the court. For this reason the specification is above set forth in hæc verba. From an examination of the language of this specification, it is seen the verification of the schedule by the bankrupt as required by law is charged. It is further charged 50 shares of the capital stock of the Goesse & Remmers Building & Contracting Company, of the par value of $100 per share, and 29 shares of the capital stock of the Carthage Marble & White Lime Company, of the par value of $100 per share, in which the bankrupt had an interest, were omitted from the schedules. Wherefore it is specifically charged appellant knowingly and with fraudulent intent made a false oath in verifying his schedules, from which all mention of these shares of stock or appellant's interest therein is omitted.

It seems to us this is entirely sufficient. It fully advises appellant of the nature of the charge preferred against his conduct, and informs the court of the precise nature of the issue to be tried. True, in addition to what has been stated, the objection contains statements of the source from which the objector obtained its knowledge, and other evidential facts; but this does not detract from the force of the charge made against the bankrupt's act. It has been held to be error, in specifying objections in opposition to a bankrupt's application for discharge, to merely follow the language of the act. The rule is the facts relied on to prevent a discharge must be pleaded with sufficient certainty of detail as to apprise the bankrupt of the charge he has to meet and to enable the court to understand the issue to be examined and determined by it. In re Matthew McNamara, 2 Am. Bankr. Rep. 566; In re Milgraum (D. C.) 12 Am. Bankr. Rep. 306, 129 Fed. 827; In re Thomas (D. C.) 1 Am. Bankr. Rep. 515, 92 Fed. 912; In re Holman (D. C.) 1 Am. Bankr. Rep. 600, 92 Fed. 512.

Again, as has been seen from the statement made, the bankrupt did not except to the form of this objection for the purpose of testing its sufficiency in law, but joined issue thereon and proceeded to the trial, treating the objection made as sufficient in the trial court.

It is further contended by appellant the charge made, if sufficient in law, was not sustained by the proofs adduced in its support; it being the contention of the bankrupt the charge made must be supported by that high degree of certainty of proof required to support a conviction for the crime of perjury. The case of State v. Hunter, 181 Mo. 338, 80 S. W. 955, is cited as declaring the correct degree of proof required in such case. From an examination of the record it appears beyond controversy the bankrupt had, prior to the institution of the proceedings against him, owned the shares of corporate stock charged in the second specification of objection; that he had pledged these shares to one Otto Kulage by bill of sale to secure the repayment of the sum of $8,000 borrowed money and any further advances, none of which were made; that, subject to the rights of Kulage, he owned these shares at the date he verified his schedules, and in such schedules he neither mentioned such shares nor his interest therein. That he knew of his interest in the shares at the time this verification was made, and believed the value of the shares to be some $40,000 above the amount they were pledged to secure, is shown by his own testimony given on the hearing of an application to remove his trustee in bankruptcy, and from the fact that he thereafter brought his action in the circuit court of the city of St. Louis against Kulage and others, in which he asserted his ownership of the shares, subject to the lien of the pledge at the date he verified his schedules. That his omission to schedule the shares and state his interest therein was not an oversight or unintentional mistake on the part of the bankrupt is attested by the fact that he defended against the adjudication in bankruptcy on the ground that he was not insolvent, admitted indebtedness against himself of some $10,000 or $12,000, claimed assets of only about the same value, and at that time made no mention whatever of his ownership of or interest in the shares. From all of which it must be held the charge made in the second specification of objection, that he knowingly and with fraudulent intent made a false oath in scheduling his assets in violation of the statute, is sustained. In re Breiner (D. C.) 11 Am. Bankr. Rep. 684, 129 Fed. 155; In re Gailey, 11 Am. Bankr. Rep. 539, 127 Fed. 538, 62 C. C. A. 336.

The contention made by appellant that the same high degree of proof is here required to sustain the objection to his discharge on the ground of making a false oath to his schedules that would be required to support a conviction against him on a charge of perjury for such false swearing is not sound. The hearing of the bankrupt's application for a discharge from his unpaid liabilities, on objection made thereto, was in no sense a criminal proceeding, to be followed in the event of his conviction by a forfeiture of either his liberty or property by way of punishment. The sole injurious consequence resulting to the bankrupt on sustaining such objections was to deny him a discharge from further liability of his just debts dischargeable by the law. True, the disclosures made by the proofs on such hearing might reflect injuriously on the conduct of the bankrupt. So might the evidence taken in the trial of any cause or proceeding. The presumption is that men are honest; that their acts were prompted by an honest purpose.

He who charges to the contrary, in order to prevail, must offer such clear and convincing proofs as will overcome this presumption and the proofs offered to refute the charge made, and thus satisfy reasonable minds of the truth of the charge. Troeder v. Lorsch et al., 150 Fed. 710, 80 C. C. A. 376; In re Howden (D. C.) 111 Fed. 723; In re Leslie (D. C.) 9 Am. Bankr. Rep. 565, 119 Fed. 406. This, we think, was done in this case.

Finally, it is contended by appellant his failure to schedule the shares in question and set forth fully and truthfully his interest therein was due to the advice of his counsel. This contention we dismiss from further consideration, for the reason we are not convinced from a reading of the record that appellant fully and frankly disclosed the facts within his knowledge relating to these shares to his counsel at the time or before his schedules were prepared and verified, and received and acted on his opinion as a matter of law, as must be done before the advice of counsel may be pleaded in justification or excuse of the charge made. In re H. D. Berner, 4 Am. Bankr. Rep. 395; In re Breitling, 13 Am. Bankr. Rep. 129, 133 Fed. 146, 66 C. C. A. 212.

By the omission of appellant to schedule the shares of stock in question, property of large value was lost to the trustee as representative of his creditors. That such omission must have been prompted by a desire on the part of appellant to avail himself of the proceeds, to the exclusion of his creditors, from a consideration of the entire case, becomes almost conclusive.

It follows the order of the trial court denying the discharge in bankruptcy prayed on the second amended specification of objection interposed by the bank was right, and must be affirmed.

It is so ordered.

(173 Fed. 488.)

JOHNSON v. WILLAPA LUMBER CO.

(Circuit Court of Appeals, Ninth Circuit. October 18, 1909.)

No. 1,685.

APPEAL AND ERROR (§§ 691, 702*)—QUESTIONS PRESENTED FOR REVIEW—LIMITATION BY OMISSIONS FROM RECORD.

Assignments of error relating to the admission of evidence or the instructions to the jury cannot be considered, where the record contains only a portion of the evidence and the charge of the court.

[Ed. Note.—For other cases, see Appeal and Error, Cent. Dig. §§ 2900–2904, 2936–2938; Dec. Dig. §§ 691, 702.*]

In Error to the Circuit Court of the United States for the Western Division of the Western District of Washington.

Action by the Willapa Lumber Company against J. J. Johnson. Judgment for plaintiff, and defendant brings error. Affirmed.

W. H. Abel, for plaintiff in error.

Chas. E. Miller, Ralph Woods, George H. Whipple, and Chickering & Gregory, for defendant in error.

Before GILBERT and MORROW, Circuit Judges, and HUNT, District Judge.

MORROW, Circuit Judge. This was an action at law, brought by the defendant in error, Willapa Lumber Company, a corporation organized and carrying on business under and by virtue of the laws of the state of Iowa, against J. J. Johnson, plaintiff in error, a citizen of the state of Washington, to recover damages for breach of contract to deliver to the defendant in error at its mill boom 5,000,000 feet of fir logs at $5.75 per 1,000. The plaintiff in error having delivered 2,172,318 feet, the suit was to recover the damages for his failure to deliver the quantity of logs provided in the contract. The trial of the case before a jury resulted in a verdict and judgment in favor of the defendant in error for the sum of $10,603.80. The assignments of error relate to the admission of evidence and instructions to the jury.

It is recited in the bill of exceptions that the testimony contained in the record "is only a portion of the testimony adduced upon said trial relating to the matters mentioned therein by the defendant." It is further recited that:

"In the general charge and instructions of the court to the jury, delivered after all arguments of counsel had been made, the following language was used by the court, the same being only a small fraction of what was said by the court in that behalf: 'There was a breach of the contract, and the court instructs you that the plaintiff is entitled to have a verdict for at least nominal damages.'"

In the absence of the testimony introduced upon the trial of the case in the court below, and the instructions of the court to the jury, there is no record upon which this court can review the action of the court with respect to the matters assigned as error.

The judgment of the Circuit Court is affirmed.

(173 Fed. 771.)

WALKER ROOFING & HEATING CO., Inc., v. MERCHANT & EVANS CO. et al.

(Circuit Court of Appeals, Fourth Circuit. July 13, 1909.)

No. 883.

1. BANKRUPTCY (§ 91*) — INVOLUNTARY PETITION — CORPORATION — NATURE OF BUSINESS—BURDEN OF PROOF.

On an involuntary bankruptcy petition against a corporation, the burden is on petitioner to show by a preponderance of the evidence that the corporation conducted a business which could be properly termed "manufacturing," "trading," or "mercantile."

[Ed. Note.—For other cases, see Bankruptcy, Cent. Dig. §§ 137, 138; Dec. Dig. § 91.*]

2. BANKRUPTCY (§ 72*)—INVOLUNTARY BANKRUPTCY—"MANUFACTURING CORPORATION."

The term "manufacturing," as used in the bankruptcy act of 1898, authorizing involuntary bankruptcy against corporations engaged in manufacturing, embraces only such corporations as are engaged in manufacturing as a business and selling their wares on the market, doing those things

usually done by those who not only manufacture their wares and goods, but place them on the market for sale either by wholesale or retail.

[Ed. Note.—For other cases, see Bankruptcy, Cent. Dig. § 17; Dec. Dig. § 72.*

For other definitions, see Words and Phrases, vol. 5, p. 4364; vol. 8, p. 7716.

What persons are subject to bankruptcy law, see note to Mattoon Nat. Bank v. First Nat. Bank, 42 C. C. A. 4.]

3. BANKRUPTCY (§ 72*)—INVOLUNTARY BANKRUPTCY—CONSTRUCTION CORPORATION—MANUFACTURING.

Where a corporation's articles provided that the corporation's activities should be the roofing of buildings and other structures, the installation of heating apparatus, the construction of houses and other structures, and the carrying on of a general roofing, heating, and construction business, and such was the corporation's principal business, its manufacturing being only incidental thereto, it was not engaged in manufacturing within the bankruptcy act of 1898, and was not subject thereto.

[Ed. Note.—For other cases, see Bankruptcy, Cent. Dig. § 17; Dec. Dig. § 72.*]

4. BANKRUPTCY (§ 91*)—CORPORATIONS—CORPORATE BUSINESS—EVIDENCE.

Evidence that a corporation's predecessors in business had sold considerable merchandise was irrelevant on the issue whether the corporation was a manufacturing or business corporation within the bankruptcy act.

[Ed. Note.—For other cases, see Bankruptcy, Cent. Dig. § 138; Dec. Dig. § 91.*]

Appeal from the District Court of the United States for the Eastern District of Virginia, at Norfolk, in Bankruptcy.

Involuntary bankruptcy proceeding by the Merchant & Evans Company and others against the Walker Roofing & Heating Company, Incorporated. From an order adjudging defendant a bankrupt, it appeals. Reversed.

In this case a petition for involuntary bankruptcy was filed against the appellant by three creditors, and a receiver appointed. It is alleged in the petition that the company "is and has been engaged principally in manufacturing, trading, and mercantile pursuits," and the act of bankruptcy charged is its execution of a deed of general assignment. The company, answering, denied the allegations as to the character of its business, and denied that it is within the purview of the bankruptcy act (Act July 1, 1898, c. 541, 30 Stat. 544 [U. S. Comp. St. 1901, p. 3418]). The matter was referred to the referee, who held that it was not such a corporation as was amenable to the bankrupt law; that it was engaged in roofing and installing steam heat in buildings, and manufacturing nothing except as incident to the particular job; that, although it kept on hand cornices and things of that kind, this was simply to enable it to carry out its own work. In the report of the referee was a summary of the evidence. The creditors excepted to this report, and, after argument, the district judge adjudged the company to be a bankrupt within the true intent and meaning of the Acts of Congress relating to bankruptcy. From that order this appeal was granted.

Robert M. Hughes (W. W. Starke and J. D. Hank, on the brief), for appellant.

Edward R. Baird, Jr. (G. R. Swink, on the brief), for appellees.

Before PRITCHARD, Circuit Judge, and KELLER and McDOWELL, District Judges.

PRITCHARD, Circuit Judge (after stating the facts as above). The only question to be determined is as to whether the appellant company "is and has been engaged principally in manufacturing, trading, and mercantile pursuits." The burden is on the petitioner in a proceeding of this character to show by a preponderance of evidence that the company conducted a business which could be properly termed "manufacturing," "trading" or "mercantile." In re Taylor, 102 Fed. 728, 42 C. C. A. 1; Chicago Co. (D. C.) 104 Fed. 67; In re Quimby, 126 Fed. 167, 61 C. C. A. 111; Loveland, Bankruptcy (3d Ed.) 276, 277.

The referee, in his report, among other things, made the following statement as to the facts upon which he based his report:

"Several witnesses were examined, and, except for the statement that the alleged bankrupt, in the course of its business, occasionally allowed the machinery of its establishment to be used for cutting out plates of tin roofing for other concerns, there was no evidence of any kind which differentiated this case from the case of McNichol Construction Company, decided by the Judge of this court, in which it was held that a construction company was not a manufacturing company within the meaning of the statute. The alleged bankrupt in this case was engaged in putting on roofing and installing steam heat in buildings. It manufactured nothing; its duties simply being to go on the roof of the house and cut tin, or other roof covering, to suit the particular job, and to complete the work in that particular. It is true that it kept on hand cornices and things of that kind, but this was simply in order to enable it to carry out its general purpose, and not for the purpose of sale in the general course of trade."

The following is a summary of the evidence taken before the referee:

"The record shows: That prior to July 18, 1908, F. B. Walker conducted a general roofing and heating business in the city of Norfolk, Va. That in conducting said business he operated a shop or plant in which was installed certain machinery. That he carried a stock of materials on hand. On July 18, 1908, this business was transferred to the Walker Roofing & Heating Company, Incorporated, which continued the business until August 6, 1908, when it executed a general deed of assignment to J. D. Hank, trustee. A petition in bankruptcy was filed about August 29, 1908. The receiver in bankruptcy, John W. Oast, Jr., testified that on his appointment as such receiver he took charge and caused a careful inventory to be made. This inventory showed machinery on hand of about $903, stock on hand of about $2,600; that the machinery consisted of two cornice brakes, squaring machine, a set of rollers, etc., used for the purpose of making cornice work from galvanized iron in sheets, cutting, edging, soldering, and rolling tin from box tin, and also used for the purpose of making furnace casings, heating pipes, gutters, etc., and also other small machinery in the factory; that in stock there was considerable box tin and galvanized iron in sheets; that from an inspection of the books there were no present contracts on hand sufficient to use this material in stock; that the only merchandise exchanged since the transfer to the company was with the Columbia Stove Company at actual cost. Mr. Odendthal of that company testified that the exchange was purely for accommodation, and the goods were billed at cost; that the books showed a large number of accounts with various concerns and people in this city for merchandise, and no labor was charged. One of these accounts was examined, and it showed that in less than one year merchandise had been delivered to the Bohn Roofing & Cornice Company engaged in similar business, to an amount of about $900, of which amount about $34 was returned in kind, and the balance paid for in cash. That these accounts were, however, contracted before the incorporation of the company now sought to be adjudicated bankrupt, and were sold altogether at

cost. F. B. Walker, testifying in behalf of the alleged bankrupt, stated that their principal business was roofing and heating; that they did not manufacture anything; that they did not use the machinery to manufacture anything; that the company had not bought any material, except for particular contracts, and the material was used, or to be used, on these particular contracts; that the company purchased tin in rolls as well as in boxes, and purchased some castings and piping already made up, and some cornice work made up. He also testified that the company had bought about $2,000 of box tin and galvanized iron in sheets; that they did only contracting business, and, in explaining the accounts referred to by the receiver, stated that they exchanged materials with other dealers when in need of a particular kind of material, and that same would be returned in kind and vice versa. Geo. B. Crow, for petitioners, testified that he was in a similar business, and was acquainted with the alleged bankrupt's business; that the cornice brakes referred to by the receiver were used for the purpose of making up cornice designs, and that these designs were made up from sheets of galvanized iron; that the designs can be purchased made up, but there is a saving in the price of more than 25 per cent.; that box tin is not placed on a roof in that shape, but that it is cut, squared, edged, soldered, and rolled; that it can be purchased either in boxes or in rolls, but that the price of box tin is about 25 per cent. cheaper than rolled tin."

In enacting this provision of the bankruptcy law it was evidently the purpose of Congress to exempt construction and other companies from its provisions where manufacturing is incident to the principal business in which they are engaged. While it was the purpose of Congress to subject those engaged in manufacuring, trading, and mercantile pursuits to the provisions of the bankruptcy act, nevertheless those who framed the act in question were undoubtedly cognizant of the fact that in many instances manufacturing is a part of and an incident to the main business, and yet in such cases it cannot be said that manufacturing is the principal business in which such companies are engaged. It is the manifest intention of the act to reach those who are engaged in manufacturing as a business, and as such sell their wares on the market and do those things that are usually done by those who not only manufacture their wares and goods but place them on the market for sale either by wholesale or retail.

In this instance there is a lack of proof to show that the appellant was principally engaged in manufacturing, trading, or mercantile business. This court in the case of Butt v. MacNichol Construction Company, 140 Fed. 840, 72 C. C. A. 252, held that a construction or contracting company did not come within the term "manufacture." That opinion is based upon the principle that, even though such companies may make things for use in their construction work that would be "manufactured" if made by a company for that special purpose, yet the making of such things by a construction company is only incident to their principal business and constitutes but a step in finishing the final product—such, for example, as a house, which, when completed, is permanently attached to the soil and thereby becomes a part thereof, and in itself is not to be classed among those things that are subject to sale or exchange as incident to manufacturing, trading, or mercantile business.

See, also, Contractors' Co. v. Hill Co., 148 Fed. 832, 78 C. C. A. 522; Hall & Kaul Co. v. Friday, 158 Fed. 593, 87 C. C. A. 23; Kings-

ton Realty Co., 160 Fed. 445, 87 C. C. A. 406; N. Y. Tunnel Co., 92 C. C. A. 202, 166 Fed. 284.

One of the best means of ascertaining the character of the business of a particular company is by an examination of the provisions of its charter in that respect. The following, contained in the charter of the appellant company, is an explicit statement as to the purposes of the company:

"The purposes for which it is formed are to roof buildings and other structures, to install heating apparatus in the same; and contract for and build houses or other structures and engage in a general roofing, heating, and construction business."

While it has been held that the charter of a company is not conclusive in this respect, yet this, among other things, is evidence which should be considered in determining the question as to the character of the business in which this company was engaged at the time the petition was filed herein. Not only does the charter limit the extent and character of the business in which this corporation was engaged, but it clearly defines the same; and this, taken in connection with the other evidence before the referee, shows conclusively that this company did not have any principal business not contemplated by its charter.

Act March 2, 1867, c. 176, 14 Stat. 517, was much broader in its scope in this respect than the present law. It included "all moneyed business or commercial corporations and joint stock companies," while section 4 of the present act includes only "corporations engaged principally in manufacturing, trading, printing, publishing, or mercantile pursuits." That the modification of this provision of the act of 1867 in this respect as found in the present law was intended to inure to the benefit of the debtor, for the reasons hereinbefore stated is unquestioned. This is fully borne out by the rule announced in the case of Philadelphia & Lewes Trans. Co., In re (D. C.) 114 Fed. 403; U. S. Hotel Co., In re, 134 Fed. 225, 67 C. C. A. 153, 68 L. R. A. 588; and MacNichol Construction Co., In re, 140 Fed. 840, 72 C. C. A. 252.

It appears from the evidence that this company within less than a year had delivered to the Bohn Roofing & Cornice Company engaged in a similar business, merchandise amounting to about $900, of which amount about $34 was returned in kind and the balance in cash, and this fact is relied upon to support the contention that this company was engaged in a trading and mercantile business. However, the record shows that these accounts were contracted before the company now sought to be adjudged a bankrupt was incorporated and were sold altogether at cost. This evidence, therefore, was not material in so far as the issue involved in this controversy is concerned, and does not in the slightest degree tend to support the contention that the business in which the appellant was engaged is subject to the provisions of the bankruptcy law. The whole course of business carried on by the appellant clearly indicates that its principal business was that of roofing, heating, and construction; and that the articles manufactured and thus kept on hand were merely used as incidental to the business in which the alleged bankrupt was engaged.

We have carefully considered the cases relied upon by the appellee, and are of the opinion that they are not applicable to the case at bar.

For the reasons hereinbefore stated, the judgment of the lower court is reversed, and the case is remanded with instructions to proceed in accordance with the views herein expressed.

Reversed.

(173 Fed. 776.)

WEIR et al. v. ROUNTREE.

(Circuit Court of Appeals, Eighth Circuit. October 28, 1909.)

No. 3,086.

1. COMMERCE (§ 10*)—NEGLIGENCE OF CARRIER—LIABILITY—LAW GOVERNING.

The liability of a railroad company for an injury resulting from its negligence, in the absence of any controlling federal statute relating to interstate commerce, is governed by the law of the state where the injury occurred, whether statutory or the common law as construed by its courts.

[Ed. Note.—For other cases, see Commerce, Cent. Dig. § 8; Dec. Dig. § 10.*]

2. CARRIERS (§ 307*)—LIABILITY FOR NEGLIGENCE—INJURY TO EXPRESS MESSENGER—CONTRACTS LIMITING LIABILITY.

Under the provisions of Gen. St. Kan. 1901, §§ 5857, 5858, making railroad companies liable for all damages to persons or property caused by their negligence, and for injuries to employés through their negligence or that of other employés, which, as construed by the Supreme Court of the state, render void any contract limiting such liability, a contract between an express company and a railroad company that the former shall indemnify and save the latter harmless against any liability on account of the injury or death of any employé of the express company while in the cars or about the platforms of the railroad company, whether resulting from its negligence or otherwise, and a second contract between the express company and an employé by which the employé assumes all risks of accidents or injuries while riding on the cars of any railroad, and expressly ratifies the contract between the express company and railroad company, and agrees to save the express company harmless from any liability thereon, wherever such contracts were made, are not available as a defense to an action against the railroad company by the widow of the employé to recover damages for his death, occurring in Kansas through the alleged negligence of the railroad company.

[Ed. Note.—For other cases, see Carriers, Cent. Dig. § 1252; Dec. Dig. § 307.*

Limitations of liability for personal injuries to passengers, see note to Clark v. Greer, 32 C. C. A. 301.]

Appeal from the Circuit Court of the United States for the Western District of Missouri.

Suit in equity by Levi C. Weir, W. H. Damsel, and Charles Steele, president and trustees of the Adams Express Company, against Amy J. Rountree. Decree for defendant, and complainants appeal. Affirmed.

E. L. Scarritt (William C. Scarritt and Elliott H. Jones, on the brief), for appellants.

Eugene F. Ware (Biddle & Lardner, Edwin Frieze, and Ware, Nelson & Ware, on the brief), for appellee.

Before SANBORN and VAN DEVANTER, Circuit Judges, and WM. H. MUNGER, District Judge.

WM. H. MUNGER, District Judge. In this case complainants, as president and trustees of the Adams Express Company, filed their bill in the Circuit Court against Amy J. Rountree, alleging that the Adams Express Company entered into a contract with the St. Louis & San Francisco Railroad Company, whereby the railroad company engaged to transport express matter for the Adams Express Company over its line of road, and the employés having charge of the express matter should be transported over the road, for a consideration named, and it was a part of the contract between the said express company and the railroad company that the—

"said express company should indemnify and save harmless the said railroad company from all claims, demands, damages, actions, costs, and charges to which the said railroad company may be subject, or which it may be required to pay by reason of any injury or loss of life suffered or sustained by any agent or employé of the said express company while in, upon, or about any of the cars or station platforms of the said railroad company, whether such injuries or loss of life arise from the negligence of the employés of the said railroad company or otherwise."

The bill further alleged that in January, 1904—

"one H. R. Rountree entered into an agreement in writing with the said express company at the city of Omaha, in the state of Nebraska, for his employment with it as an express messenger, whereby the said Rountree did express and agree that, whereas, the duties of said employment may require that he should be in, upon, or about, or travel on, the cars and conveyances of certain railroad companies and that the said railroad companies require of the said express company as a condition of their permitting said Rountree to be in, upon, or about, or travel on, their cars in the performance of said duties, that they should be indemnified by said express company against and released from all liability for and in respect of any damage or injury which might be sustained by the said Rountree, or for his death, in the course of such employment, whether same be occasioned by the negligence of said railroad companies or otherwise, in consideration of the premises and of his employment as aforesaid at a stipulated rate of compensation he, the said Rountree, did assume all risks of accidents and injuries which he might meet with or sustain in the course of his employment, whether occasioned or resulting by or from the gross or other negligence of any corporation engaged in operating any railroad, or of any employé of any such corporation, or otherwise, and whether resulting in his death or otherwise, and did thereby expressly agree to indemnify and save harmless the said express company of and from any and all claims which might be made against it at any time by any corporation under any agreement which the said express company had theretofore made or might thereafter make, arising out of any claim or recovery by him, the said Rountree, on his part, or by or on the part of his representatives, or any damages sustained by him or them by reason of any injury to him or by reason of his death, whether such injury or death resulted from the gross negligence of any such railroad corporation or any employé of any such corporation or otherwise, * * * and he did thereby expressly ratify all agreements theretofore made by the said express company with any corporation owning any railroad, and especially the said contract hereinbefore mentioned between the said express company and the said St. Louis & San Francisco Railroad Company, relative to the ultimate liability of the said express company to save said railroad company harmless from damages occasioned to the said Rountree through the negligence of the said railroad company or its employés, and he, the said Rountree, did expressly agree to be bound by said agreement as fully as if he were a party thereto."

The bill further alleges that while he was upon the St. Louis & San Francisco Railroad, in charge of certain express matter being carried and conveyed upon the line of said road, and while the said train was near the city of Columbus, in the state of Kansas, on or about February 14, 1906, said train and the car in which the said Rountree was being carried and conveyed as aforesaid was wrecked, and thereby the said Rountree was so injured that his death resulted therefrom a short time thereafter. The bill further alleges that the defendant Amy J. Rountree, widow of said H. R. Rountree, deceased, has commenced an action in the district court of Cherokee county, Kan., against said St. Louis & San Francisco Railroad Company, to recover the sum of $10,000 as her damages alleged to be sustained by reason of the death of said H. R. Rountree, caused by the negligence of said railroad company and its employés, etc. The bill further alleges that the railroad company, in its answer in said action, set forth the contract referred to between the said railroad company and the said express company, and the contract between the express company and said H. R. Rountree, but that the district court of Cherokee county, Kan., has sustained a demurrer to said answer, holding that such contracts were void and did not constitute a defense to said action.

Complainants in their bill pray that the court order and decree that the defendant Amy J. Rountree execute and deliver to the said St. Louis & San Francisco Railroad Company a good and sufficient release, under hand and seal, of all claims, demands, and causes of action arising out of the injury or death of the said H. R. Rountree, hereinbefore referred to, or connected with or resulting therefom, to be of the same force and effect as though the same had been executed by the said H. R. Rountree under his hand and seal during his lifetime, and that a writ of injunction issue, commanding the said Amy J. Rountree, her agents and attorneys, and all persons claiming to act under her authority, direction, or control, to absolutely desist and refrain from prosecuting her said claim against the St. Louis & San Francisco Railroad Company in the district court of Cherokee county, Kan.

To the bill thus filed by complainants the defendant answered, in which she admitted the contract between the express company and the railroad company and the contract between the express company and said H. R. Rountree, exactly as stated in the bill of complaint. Other allegations as to jurisdiction, etc., were admitted. The answer contained the following allegation:

"The defendant says that part of the services of the said H. R. Rountree, besides those of express messenger, as stated in complainant's bill, were the duties of baggage master of the train on which he was employed; that the express company property was carried in the baggage car, and that he not only had charge of the express matter, but also of all of the baggage on the train, consisting of the trunks and property of the passengers, carried in the said baggage car; and that it was part of his duty and employment to care for and handle said baggage. Wherefore defendant alleges that he was an employé of the railroad company, as such baggage master, which was a duty and service separate from the express business, and no part thereof. The defendant says that the said Rountree was killed by, through, and on account of the gross negligence of the said railroad company while he was in its employ as baggage master as aforesaid. Suit was brought on October 5, 1906, against

said railroad company in the said district court of Cherokee county, Kan., a court of general jurisdiction, by this defendant, setting forth that the death of the said Rountree was caused by the gross negligence of the said railroad company in the operation of its trains, and took place while he was in the express and baggage car of the railroad company, in charge of the express matter and of the baggage of the said train, and in the employ of the said express company and in the employ of the said railroad company as baggage master as aforesaid in the said car."

Other allegations were contained in the answer, which are unnecessary to be considered here.

Complainant did not file a replication to said answer, but, on the 7th day of May, 1909, filed a motion as follows (after entitling the case):

"Now come the plaintiffs in the above-entitled cause and respectfully move the court to enter a decree in this cause in their favor, conformable to the prayer of the bill of complaint, upon the allegations of the said bill of complaint and of the admissions and statements of fact contained in the answer of the defendant, for the reason that upon the facts so established the plaintiffs are entitled to the relief prayed for."

Hearing was had on the 8th day of May, and a decree entered that plaintiffs were not entitled to the relief prayed for, from which decree the plaintiffs have taken this appeal.

One reason why plaintiff is not entitled to the relief asked is that the injury and death occurred in the state of Kansas, and the rights of the widow are to be measured according to the laws of that state. We need not stop to inquire whether or not the contract in question was valid according to the laws of Nebraska, where executed, as the widow is not basing her action upon such contract, but upon the statute law of Kansas. Whether such contract is available as a defense to her action we think determinable according to the laws of Kansas.

Penn. R. R. Co. v. Hughes, 191 U. S. 477, 24 Sup. Ct. 132, 48 L. Ed. 268, was a case in which the plaintiff shipped a horse from Albany, in the state of New York, to Cynwyg, in the state of Pennsylvania. The bill of lading contained a clause limiting the carrier's liability to a stipulated value in consideration of the rate paid, the shipper having been offered a bill of lading without such limitation on payment of a higher rate, but he signed a memorandum accepting the contract at the lower rate. The horse was injured in the state of Pennsylvania by reason of the negligence of the carrier. The owner brought suit in the state of Pennsylvania, and the common law, as administered in Pennsylvania, held that such limitations in the contract were invalid. In the state of New York, where the bill of lading was issued, such limitation was valid. The Supreme Court held that the question was a local one, to be administered according to the law of the state where the injury occurred, and, in the absence of a statute, prohibiting limitations of that character in the contract, it was to be governed by the common law, as construed by the courts of that state. It was further held that, as Congress had not, in the exercise of its power over the interstate commerce, legislated with respect to such contracts, that it was open to the states to determine the validity of such a contract. The court cited the case of Chicago, Milwaukee, etc., R. R. Co. v. Solan,

169 U. S. 133, 18 Sup. Ct. 289, 42 L. Ed. 688, and quoted therefrom the following:

"A carrier exercising his calling within a particular state, although engaged in business of interstate commerce is answerable according to the law of the state for acts of nonfeasance or of misfeasance committed within its limits. * * * The rule prescribed for the construction of railroads, and for their management and operation, designed to protect persons and property otherwise endangered by their use, are strictly within the scope of the local law."

The court then said:

"We can see no difference in the application of the principle based upon the manner in which the state requires this degree of care and responsibility whether enacted into a statute or resulting from the rules of law enforced in the state courts. The state has the right to promote the welfare and safety of those within its jurisdiction by requiring common carriers to be responsible to the full measure of the loss resulting from their negligence, *a contract to the contrary notwithstanding.*" (Italics our own.)

Martin v. Pittsburg & Lake Erie Ry. Co., 203 U. S. 284, 27 Sup. Ct. 100, 51 L. Ed. 184, was a case in which a postal clerk was injured by reason of the derailment of a train in Pennsylvania. The statute in that case provided:

"When any person shall sustain personal injury or loss of life while lawfully engaged or employed on or about the roads, works, depots, and premises of a railroad company, or in or about any train or car therein or thereon, of which company such person is not an employé, the right of action and recovery in all such cases against the company shall be such only as would exist if such person were an employé, provided that this section shall not apply to passengers."

It was held that it was a local question, for the state to determine, whether or not the postal clerk was a passenger, and as to the validity of a statute of that character.

Sections 5857 and 5858, Gen. St. Kan. 1901, are as follows:

"Sec. 5857. That railroads in this state shall be liable for all damages done to persons and property, when done in consequence of any neglect on the part of the railroad companies.

"Sec. 5858. Every railroad company organized or doing business in this state shall be liable for all damages done to any employé of such company in consequence of any negligence of its agents, or by any mismanagement of its engineers or other employés to any person sustaining such damage."

The Supreme Court of that state, construing these sections, have held that a railroad company could not contract in advance for the waiver and release of the statutory liability imposed upon every railroad company organized or doing business in that state, and that a contract in contravention of this statute was void. Kansas Pac. Ry. Co. v. Peavey, 29 Kan. 169, 44 Am. Rep. 630; Chicago, Rock Island & Pac. Ry. Co. v. Martin, 59 Kan. 437, 53 Pac. 461. In the latter case it was said:

"It is an action instituted by his widow, as administratrix, under section 418, Gen. St. 1897, for the benefit of herself and the children of the deceased. It is to recover their damages resulting from the death of the husband and father. It is to recover for the injury to them, rather than to the deceased. Against their rights the deceased had no authority to contract. The cause of action for which the plaintiff sues never accrued to him. It could only accrue

as a result of his death. His stipulation, even if binding on himself, is no defense against the statutory right of the plaintiff."

Again, it is apparent from the facts that it was not contemplated that the contract of employment between Rountree and the express company should be wholly performed within the state of Nebraska, where the contract of employment was entered into, but that the service to be rendered was to be in different states. For that reason we think the law of the place of performance, and where the cause of action accrues, should govern. Stone v. U. P. R. R. Co., 32 Utah, 185, 89 Pac. 715. To illustrate: Suppose a railroad company operating a line of road in two or more states should employ A. to render service for it as a brakeman, the contract of employment being made in a state in which A. could recover from the railroad company for an injury caused by the negligence of a fellow servant, and he should sustain an injury in a state in which recovery could not be had because of the negligence of a fellow servant. We do not think that it could be successfully contended in such case that, because the contract was made in the state in which the recovery could be had, it would operate to give him a cause of action in the state where the injury took place, contrary to the laws of such state; and the converse of the rule must also be true.

For the foregoing reasons, plaintiff is not entitled to the relief prayed, and the decree is affirmed.

(173 Fed. 781.)

BALDI v. CEDAR HILL COAL & COKE CO.

(Circuit Court of Appeals, Eighth Circuit. October 28, 1909.)

No. 2,934.

1. MASTER AND SERVANT (§ 118*)—OPERATION OF MINES—STATUTORY PROVISIONS—"TRAVELING WAY."

The place in which plaintiff and another were working in a coal mine when plaintiff was injured by falling rock, while designed for a passageway when completed, but which was then completed only a part of the way, *held* not to have been a "traveling way," within the meaning of the Colorado statute requiring mining companies to timber traveling ways, but in the nature of a room, for which the company was required to furnish the timbers, to be placed by the workmen.

[Ed. Note.—For other cases, see Master and Servant, Dec. Dig. § 118.*]

2. APPEAL AND ERROR (§ 1048*)—REVIEW—DISCRETION OF COURT—PERMITTING LEADING QUESTIONS TO WITNESS.

Permitting leading and suggestive questions to a witness, over objection, may constitute reversible error, where the answers elicited are the only basis in the evidence for an instruction given on a material issue.

[Ed. Note.—For other cases, see Appeal and Error, Cent. Dig. § 4141; Dec. Dig. § 1048.*]

3. MASTER AND SERVANT (§ 235*)—MASTER'S LIABILITY FOR INJURY TO SERVANT—PLACES TO WORK—CARE REQUIRED OF SERVANT.

When it is the duty of a master to exercise ordinary care to furnish a reasonably safe place for an employé to work, the employé has the right to

assume that such duty has been performed, and is not required to exercise care to discover unknown dangers, which are not plainly observable.

[Ed. Note.—For other cases, see Master and Servant, Cent. Dig. §§ 710–722; Dec. Dig. § 235.*]

In Error to the Circuit Court of the United States for the District of Colorado.

Action by Dominick Baldi against the Cedar Hill Coal & Coke Company. Judgment for defendant, and plaintiff brings error. Reversed.

L. J. Stark and George S. Redd (George Stidger, on the brief), for plaintiff in error.

Julian G. Dickinson, for defendant in error.

Before SANBORN and VAN DEVANTER, Circuit Judges, and WM. H. MUNGER, District Judge.

WM. H. MUNGER, District Judge. In this case the plaintiff and one Artizoni were engaged in removing coal, dirt, and rock through a place which, when completed, was to be used as a passageway or entry. They were to receive 50 cents per ton for the coal removed, 50 cents per car for the rock, and $1.50 per lineal yard for the work done. The entryway or room had been constructed to such an extent that the face of the room was in the neighborhood of 38 feet from the entrance. On or about July 17, 1907, while the plaintiff and Artizoni were working this place, a piece of rock fell from the roof, striking plaintiff on the foot, injuring it to such an extent that his foot was amputated a short distance above the ankle. This action was brought by plaintiff, and the negligence alleged upon the part of defendant was that it negligently and willfully failed to furnish timbers for the purpose of propping the roof of the mine, and negligently and willfully failed to place timbers in the working place of said mine; the theory of the plaintiff being that this was an entryway, which it was the duty of the defendant, under the statute of Colorado, to timber and keep a careful watch over, to see that all loose coal, slate, and rock overhead was carefully secured against falling. The provision of the statute of Colorado claimed to be applicable is found in Sess. Laws 1885, p. 138, and is as follows:

"Sec. 4. The owner or agent of every coal mine shall employ a practical and competent inside overseer, to be called a 'mining boss,' who shall keep a careful watch over the ventilating apparatus, and the airways, traveling ways, pumps, timbers, and drainage; also, shall see that, as the miners advance their excavations, all loose coal, slate and rock overhead are carefully secured against falling in or upon the traveling ways, and that sufficient timber, of suitable length and sizes, is furnished for the places where they are to be used, and placed in the working places of the mines."

Under the facts in this case, we do not think the place where they were working was a traveling way at the time of the injury. The fact that it was contemplated to be a traveling way, and the excavation was being made for that purpose, did not constitute a traveling way until its completion. It was the same as what has been designated as a "room," in which coal is mined, and under the statute it was the duty of the defendant to furnish to plaintiff and his companion, Arti-

zoni, the timbers necessary for protecting the roof of the excavation from falling as the work progressed. But it was not the duty of the defendant to place the timbers. This was the duty of the plaintiff and Artizoni. But it was the duty of the defendant to furnish the necessary timbers in the room. Whether or not the necessary timbers were furnished, or timbers furnished as requested and called for by Artizoni and plaintiff, the evidence is conflicting and unsatisfactory. The evidence in this respect, however, was sufficient to go to the jury.

Error is assigned based upon the overruling of objections to questions asked a witness for defendant, which questions and answers thereto, were as follows:

"Q. These men were to look after their own working place, were they, to see if it were safe? A. Yes. Q. These men were under contract to drive this entry, so that it would be a permanent place for pulling through or hauling coal on cars? A. Correct."

These questions were each objected to as being leading and suggestive. The objections were well taken. The witness had been interrogated as to the duties of plaintiff and Artizoni, the arrangement under which they were doing their work, and, while the witness had previously answered without objection that the work for which they were employed was customary work mining coal, taking the responsibility of all other things, digging coal and taking care of the place, these questions objected to were suggestive of the fact, that had not been answered, that they were to see that the working place was safe, and that they were under contract to complete this entryway as a permanent place for pulling through and hauling cars of coal. The vital importance of the evidence elicited by these questions is fully understood, when we consider the following portion of the instructions of the court to the jury, which was duly excepted to:

"It will be necessary, in the consideration of the evidence, for you to first determine whether or not the plaintiff and Artizoni were to drive this entry and turn it over to the company as a completed entry. If you find that to be the fact, then the plaintiff cannot recover under any condition or any circumstances that you might arrive at, because in that event it was incumbent upon plaintiff and his associate to keep the way in a safe condition until completed, and under such conditions the company would have nothing to do with it until completed."

There was no other evidence, excepting the answers to these questions, objected to as leading and suggestive, from which the jury would be authorized to find that the plaintiff and Artizoni were working under a contract by which this entry was to be completed and turned over to the defendant as a completed entry. They were working, so far as the other evidence indicates, as the ordinary miner usually works, and under no special contract. The defendant, it is true, contemplated that, after their work had reached a given point, and connected with another entryway, this place in which they were working should be used thereafter as an entrance. Leading and suggestive questions and answers thereto are not always prejudicial; but, in view of the instruction thus given, and the fact that the answers to the questions objected to were the only evidence upon which the instruction could be fairly based, it is apparent that it was prejudicial error, for which a new trial must be granted.

A further portion of the charge excepted to was in the following language:

"Now, even though you might find that the defendant is guilty of negligence as charged, yet if you further find and believe from the evidence that the plaintiff knew of this dangerous place in the roof, or by exercise of reasonable care on his part for his safety he could have found out and avoided it, then he cannot recover, because in that event he would be guilty of contributory negligence, would have assumed the risk, and his recovery is barred."

This portion of the charge was only applicable upon the theory that it was defendant's duty to provide a safe place for plaintiff to perform his work, and its statement of the law relative to assumed risk was erroneous in this: That it placed upon the plaintiff the exercise of care to find out whether or not the condition of the roof was dangerous. When it is the duty of the master to exercise ordinary care to furnish a reasonably safe place for the employé, such employé only assumes the risk of those dangers which are known to him or which are plainly observable. He has a right to assume that the master has performed his duty, and it is not incumbent upon the employé to exercise care to discover unknown dangers which are not plainly observable. Choctaw, Okla. & Gulf R. R. v. McDade, 191 U. S. 64, 24 Sup. Ct. 24, 48 L. Ed. 96.

The judgment is reversed, and a new trial granted.

(173 Fed. 784.)

MAINE & N. H. GRANITE CORP. v. HACHEY.

(Circuit Court of Appeals, First Circuit. November 11, 1909.)

No. 812.

MASTER AND SERVANT (§ 190*)—MASTER'S LIABILITY FOR INJURY TO SERVANT—NEGLIGENCE OF "FELLOW SERVANT."

Plaintiff was employed by defendant at its stone quarry, and engaged in breaking waste rock, working beside a large pile, on which the rock were dropped from time to time by a derrick. The derrick was in charge of a boss derrickman, whose duty it was, under instructions from defendant, to operate the same, and also to give warning to plaintiff and other workmen when rock were about to be deposited on the pile. On one occasion he neglected to give such warning, and a rock slid down the pile and injured plaintiff. *Held*, that the giving of such warning signals was a part of the work of operation, in which the boss derrickman acted as a "fellow servant" of plaintiff, and not as representative of the master in the performance of a nondelegable duty to provide a safe place to work, and that his negligence gave plaintiff no right of recovery against defendant.

[Ed. Note.—For other cases, see Master and Servant, Cent. Dig. § 471; Dec. Dig. § 190.*

For other definitions, see Words and Phrases, vol. 3, pp. 2716–2730; vol. 8, p. 7662.]

In Error to the Circuit Court of the United States for the District of New Hampshire.

Action by Joseph Hachey against the Maine & New Hampshire Granite Corporation. Judgment for plaintiff, and defendant brings error. Reversed.

Frank S. Streeter and Fred C. Demond (Streeter & Hollis, on the brief), for plaintiff in error.

Bernard Jacobs (Drew, Jordan, Shurtleff & Morris, on the brief), for defendant in error.

Before COLT and PUTNAM, Circuit Judges, and BROWN, District Judge.

BROWN, District Judge. This is a writ of error for review of the rulings of the Circuit Court in an action for negligence. Upon the conclusion of the plaintiff's testimony the Granite Corporation moved for the direction of a verdict in its favor, and upon a denial of this motion duly excepted. Its exception raises the question whether, upon the facts, the negligence which resulted in personal injuries was that of a fellow servant or of the master, the Granite Corporation.

Hachey was employed by the Granite Corporation in its quarry at Redstone, N. H. He was engaged in breaking up waste rock, or "grout," beside a large pile of grout about 30 feet in height. Pieces of waste rock were deposited upon this grout pile from time to time by a derrick. The danger from falling stones was such as to require that the men working at or near the grout pile should receive a warning whenever rock was to be dropped from the derrick upon the slanting grout pile.

The derrick was operated by machinery, and was in charge of a boss derrickman, whose duty it was to see that the stones were properly raised, swung, and deposited upon the grout pile, to give proper signals to the engineer, and also to give warning to the workmen in the vicinity of the grout pile in time to enable them to go to a place of safety while stones were dropped upon the pile. The boss derrickman usually had one or two men under him as helpers.

It is agreed that it was the duty of the boss derrickman to give timely warnings, either personally or by sending one of his helpers to do it. The warning was given by shouting, or at times by rolling a small stone near the men at the foot of the pile. The men working at or near the grout pile were accustomed to rely upon receiving a signal before the dumping of rock. The pile of grout obstructed the view of the derrick, and the attention of the men at work breaking up rock was so engaged that the giving of signals to them was required as a regular accompaniment of the operation of the derrick. It is agreed that it was customary for the derrickman to give the signals personally or through one of his helpers.

Upon the present record it must be assumed that the boss derrickman, Bessanti, was guilty of negligence in dropping a heavy stone on the grout pile without giving warning. The stone slid and fell upon Hachey, inflicting serious injury. Hachey was without fault in the matter.

The Granite Corporation, plaintiff in error, conceding the negligence of Bessanti, the boss derrickman, contends that his failure to give warning of the movement of the derrick and of the dropping of stone was a negligent performance of the duties of a fellow servant of Hachey. The defendant in error contends that under the circumstances

the master, in order to make the place at the side of the grout pile a reasonably safe working place, was bound to give warning, and that the person employed to give warning was performing a part of the master's nondelegable duty.

In support of the contention that in respect to the duty of giving warning of the dropping of stone the boss derrickman was not a fellow servant, but a representative of the master, the defendant in error suggests a distinction between the failure to observe a rule necessary in maintaining a safe place and the failure to observe a rule promulgated for the successful operation of the work. It is argued that the giving of a warning signal was not a work of operation, and that it was distinct from the duty of handling the rock. Such a division of the duties of the boss derrickman into two parts—that is, the operation of the derrick and moving of rock, wherein he would be a fellow servant, and that of giving warning, wherein he would not be a fellow servant—is not sound. Those cases which, in general terms, state it to be the master's duty to give warning to inexperienced servants or of special dangers are not applicable to the facts of the present case, though they may furnish some general phrases which seem to give support to the argument of the defendant in error. The general proposition that it is the duty of the master to give warning is not to be so extended as to require him to give in person or to insure the giving by others of all those special signals or shouts which are so associated with the work of operation as to become part of it. The employment of different men in different parts of the general work requires under many circumstances the giving of signals as an accompaniment of the work itself, in order that there may be co-operation in the movement of the men. The giving of such signals is a part of the work of operation. Such signals are rather the giving of information of what one workman is about to do, in order that his fellow workmen may have knowledge of it and conduct themselves accordingly, than the giving of orders which are to be considered as the orders of a master. Standard Oil Company v. Anderson, 212 U. S. 216–226, 29 Sup. Ct. 252, 53 L. Ed. 480. The master may intrust to a competent servant the work of shouting or otherwise signaling when he is about to hoist or to lower away, and it is not the master's fault if such a servant fails to inform his fellow servants of the movement of the machine under his charge.

The evidence does not show any failure of the master to make reasonable provision that proper signals should be given. The uninterrupted custom of the work at the quarry shows that there was no defect in the system established by the master. The authorities do not support the contention that the master is an insurer of the sufficiency of the means that he selects for giving signals. There can be little doubt that the boss derrickman, who controls the movements of the derrick by signaling the engineer, is a suitable, if not the most suitable, person to intrust with the duty of giving warning of the proposed movements of the derrick. By the course of business, with which Hachey by many years of experience had become familiar, the duties of operating the derrick and of giving notice of its operations were related and associated duties intrusted to a fellow workman. Reason-

able provision for giving warning having been made, the danger that this workman might be negligent in a single instance in the performance of his duty was a risk assumed by Hachey.

It being conceded that it was the general duty of the boss derrickman both to operate the derrick and to give signals of its operation, the fact that shortly before the accident the general superintendent of the quarry gave him special instructions to look out for the men behind the grout pile did not change his status as a fellow servant or enlarge the master's liability for his failure of duty. The authorities cited by the plaintiff in error amply sustain its contention that the negligence of Bessanti was of a fellow servant, and not the negligence of the master. Among them are Alaska, etc., Mining Co. v. Whelan, 168 U. S. 86, 18 Sup. Ct. 40, 42 L. Ed. 390; McLaine v. Head & Dowst, 71 N. H. 294, 52 Atl. 545, 58 L. R. A. 462, 93 Am. St. Rep. 522; Northern Pacific R. R. Co. v. Charless, 162 U. S. 359, 16 Sup. Ct. 848, 40 L. Ed. 999; Martin v. Railroad Co., 166 U. S. 399, 17 Sup. Ct. 603, 41 L. Ed. 1051; Hermann v. Mill Co. (D. C.) 71 Fed. 853; Fortin v. Manville Co. (C. C.) 128 Fed. 642. See, also, Kreigh v. Westinghouse & Co., 214 U. S. 249–256, 29 Sup. Ct. 619, 53 L. Ed. 984; Perry v. Rogers, 157 N. Y. 251–255, 51 N. E. 1021 et seq.; 26 Cyc. 1338.

The judgment of the Circuit Court is reversed, with costs of appeal to the plaintiff in error.

(173 Fed. 787.)

DALE v. DENVER CITY TRAMWAY CO.

(Circuit Court of Appeals, Eighth Circuit. November 1, 1909.)

No. 3,083.

1. NEGLIGENCE (§ 93*)—IMPUTED NEGLIGENCE—NEGLIGENCE OF A CHAUFFEUR IMPUTABLE TO OCCUPANT OF CAR.

The negligence of the driver of an automobile is not imputable to an occupant, who is riding as the guest of another and has no control over the movements of the car.

[Ed. Note.— For other cases, see Negligence, Cent. Dig. § 147; Dec. Dig. § 93.*

Negligence of driver of vehicle imputed to persons riding with him, see note to Davis v. Chicago, R. I. & P. Ry. Co., 88 C. C. A. 497.]

2. NEGLIGENCE (§ 119*)—ACTIONS—EVIDENCE ADMISSIBLE UNDER PLEADINGS.

Under the settled doctrine of the federal courts, a municipal ordinance, to be admissible in evidence in support of a charge of negligence, must be pleaded.

[Ed. Note.—For other cases, see Negligence, Cent. Dig. § 206; Dec. Dig. § 119.*]

3. STREET RAILROADS (§ 90*)—COLLISION WITH VEHICLE AT CROSSING—NEGLIGENCE.

A street railway company is not chargeable with negligence, which renders it liable for the killing of a passenger in an automobile by a collision between such machine and a car at a street crossing, where the car was not being run at an excessive speed, and the automobile, which had been proceeding along the same street a short distance ahead of the car, suddenly turned across the track so close to the car that the motor-

man could not stop before the collision occurred, a movement which he was not bound to anticipate.

[Ed. Note.—For other cases, see Street Railroads, Cent. Dig. §§ 191, 192; Dec. Dig. § 90.*]

In Error to the Circuit Court of the United States for the District of Colorado.

Action by Russell Dale against the Denver City Tramway Company. Judgment for defendant, and plaintiff brings error. Affirmed.

Robert I. Gregg (R. H. Gilmore, on the brief), for plaintiff in error.

Howard S. Robertson (Gerald Hughes, on the brief), for defendant in error.

Before SANBORN and VAN DEVANTER, Circuit Judges, and WM. H. MUNGER, District Judge.

WM. H. MUNGER, District Judge. This is an action brought by plaintiff to recover damages for the death of his wife, caused by the alleged negligence of the defendant. The facts disclose that Mrs. Dale, a resident of Chicago, Ill., was visiting friends in Denver; that on September 20, 1907, she, with a number of other ladies, was the guest of a friend at a tea party, after which the hostess hired an automobile and took her guests about the city sight-seeing. At about 6 o'clock in the evening they were going west on Eighth avenue in an automobile at a speed of from 15 to 18 miles per hour, until they reached Newport street, which crossed Eighth avenue, when, just as it made the turn to cross defendant's tracks on Newport street, the automobile slackened its speed to 7 or 8 miles per hour. Eighth avenue, at the point in question, was in a sparsely settled portion of the city, and the street but little traveled. The street car track was laid in the center of the avenue, and there was no travel on the avenue on the south of the track; the only travel being upon the north side, in a pathway about 8 feet distant from the outer rail of the street railway track. One of defendant's street cars going west on Eighth avenue traveled some two lengths in the rear of the automobile for about a block before reaching Newport street, at the crossing of which a collision occurred between the automobile and the street car, from which Mrs. Dale sustained injuries resulting in her death. The automobile was one having a top; the rear curtain being down, and the side curtains being up. There were seven occupants of the automobile; Mrs. Dale being one of three persons sitting in the rear seat.

That the chauffeur was guilty of gross negligence in turning the automobile to cross the track, not having taken reasonable precautions to ascertain whether or not the street car was close behind him, does not admit of doubt; but Mrs. Dale, the deceased, was an occupant of the automobile as a guest, and did not have charge of, or control, its movements. The negligence of the chauffeur, therefore, is not imputable to her. Little v. Hackett, 116 U. S. 366, 6 Sup. Ct. 391, 29 L. Ed. 652.

There is some evidence to the effect that the street car was making a speed of from 18 to 20 miles per hour. On the trial plaintiff offered

in evidence a municipal ordinance which granted the right to operate street cars upon certain streets, at a speed not exceeding 15 miles per hour, to the introduction of which defendant objected, for the reason that the ordinance had not been pleaded, and also for the reason that it was incompetent, irrelevant, and immaterial, which objection was sustained. The complaint was based upon the common-law doctrine of negligence. The negligence on the part of the company was charged as running the street car at an excessive rate of speed, and not giving warning of its approach by the sounding of a gong or the ringing of a bell.

The weight of authority and settled doctrine, of the federal courts at least, is that a municipal ordinance, to be admissible in evidence, must in some manner be referred to in the pleadings. Robinson v. Denver City Tramway Co., 164 Fed. 174, 90 C. C. A. 160, and cases cited. We are, however, cited to two recent decisions of the Supreme Court of Colorado, Griffith v. Denver Consolidated Tramway Co., 14 Colo. App. 504, 61 Pac. 46, and Denver Tramway Co. v. Martin, 44 Colo. 324, 98 Pac. 836, holding that, when the action was not based upon the violation of an ordinance but upon negligence in running the car at an excessive rate of speed, then an ordinance prescribing the rate of speed may be given in evidence, though not pleaded, for the reason that the purpose of a pleading was to set forth ultimate rather than evidential facts; that the ultimate fact proper to be pleaded was the negligent speed of the car; that the speed being in violation of the ordinance was merely an evidential fact to support the ultimate fact. The violation of the terms of the ordinance not alone being negligence per se, so as to create a cause of action, but simply a fact or circumstance to be considered in connection with other facts and circumstances in determining whether or not the ultimate fact, to wit, the negligent speed of the car, was established, it is, therefore, urged upon us with much force that the admissibility of the ordinance as evidence in the case involved the construction of pleadings only, and that the federal court, under the conformity act, should follow the decision of the state Supreme Court in this regard. We need not now stop to determine the correctness of this view. The ordinance was one adopted by the town of Montclair, in June, 1898, and authorized the Colfax Electric Railway Company to lay its tracks and operate its cars on Colfax avenue, Center avenue, and Geneva avenue of that town. The town of Montclair is now a part of the city and county of Denver, and the evidence discloses that Eighth avenue, the place where the accident occurred, was within the limits of the former town of Montclair; but there is an entire absence of evidence to show that the defendant was operating its cars on Eighth avenue by authority of and subject to the provisions of that ordinance. Hence it was not material to any issue in the case, and the objection to its introduction was properly sustained.

At the close of all of the evidence, upon motion of defendant, the court directed a verdict for the defendant. This is alleged as error. There was no whistle upon the street car, but a gong, and we think it clear from the evidence that the motorman sounded the gong at Oneida street (being the first street back from Newport); that he had

proper control of his car, and as soon as the automobile turned to cross the track he immediately put on the brake, released the current, and sounded the gong, all of which was ineffectual, as it was but a moment between the time the chauffeur turned his car to cross the track and the collision. The speed at which the street car was going was not, considering the sparsely settled portion of the city and the small amount of travel upon the streets in that section, a negligent rate of speed. While the motorman knew and saw that the automobile was traveling ahead of him in the same direction, he was not bound to anticipate that the automobile would attempt to cross the track without reasonable precautions being taken to ascertain the approach of the car. Ohio & M. Ry. Co. v. Walker, 113 Ind. 196, 15 N. E. 234, 3 Am. St. Rep. 638; Atlanta, etc., R. R. Co. v. Lovelace, 121 Ga. 487, 49 S. E. 607; Western & A. R. Co. v. Ferguson, 113 Ga. 708, 39 S. E. 306, 54 L. R. A. 802; Macon & I. S. Electric St. Ry. v. Holmes, 103 Ga. 655, 30 S. E. 563.

We think there was a failure to show actionable negligence on the part of defendant, and the judgment is affirmed.

(173 Fed. 790.)

GENERAL ELECTRIC CO. v. SMITH.

(Circuit Court of Appeals, First Circuit. November 12, 1909.)

No. 837.

PATENTS (§ 328*)—VALIDITY AND INFRINGEMENT—ELECTRIC SAFETY FUSE.

The Thalacker patent, No. 502,541, for an electric safety fuse, the essential feature of which is the use of an auxiliary fuse, so placed that it may be seen, and which will be destroyed when the main fuse is blown, as an indicator of the condition of the main fuse, was not anticipated, and discloses invention, and is entitled to a fairly broad construction; also *held* infringed.

[Ed. Note.—For other cases, see Patents, Dec. Dig. § 328.*]

Appeal from the Circuit Court of the United States for the District of Massachusetts.

Suit in equity by the General Electric Company against Fred B. Smith for infringement of patent. Decree (170 Fed. 593) for defendant, and complainant appeals. Reversed.

William K. Richardson and Alexander D. Salinger, for appellant.

John P. Bartlett (Henry B. Brownell, on the brief), for appellee.

Before COLT, PUTNAM, and LOWELL, Circuit Judges.

LOWELL, Circuit Judge. This was a bill in equity to restrain the infringement of letters patent No. 502,541, issued August 1, 1903, to Thalacker. The following claims are in issue:

"1. In an electric safety fuse, the combination of a main safety fuse, an auxiliary safety fuse, and a box or casing completely enveloping the main fuse, but so constructed as to permit the condition of the auxiliary fuse to be seen.

"2. In an electric safety fuse, the combination of a main fuse, an auxiliary fuse, and a casing completely enveloping the main fuse, but only partially enveloping the auxiliary fuse."

"4. In an electric safety fuse, the combination of a main fuse, an auxiliary fuse, overlying and underlying portions of insulating material, and an inclosing casing, said casing provided with an opening through its top portion whereby the conditions of the auxiliary fuse may be observed."

The defendant denied the validity of the patent and its infringement. The learned judge of the Circuit Court found that no infringement had been committed, and he dismissed the bill. The complainant thereupon brought the case to this court by appeal.

Unprotected safety fuses, when "blown" or fused by the current, often "arc," and spatter the fused metal over neighboring objects, sometimes igniting them. If the safety fuse be suitably inclosed, the dangers above stated are largely obviated; but the condition of the fuse cannot be known without breaking open the box or casing, and a wire supposed to be dead may prove to be alive, to the damage of an employé who handles it. To obviate the dangers last mentioned, Thalacker's patent was issued. It covers an auxiliary fuse in shunt with the main fuse. The former is so much exposed to observation that its condition can at any time be ascertained, and the condition of the main safety fuse be inferred therefrom.

"In order to make a safety fuse which shall have none of the faults mentioned, I combine with a strip of fusible metal, completely inclosed in a non-conducting box or case, an auxiliary fusible strip so located and connected as to be seen at all times, and which will be destroyed when the main fuse, which is out of sight, is 'blown.'"

The destruction of the auxiliary fuse at the time of the destruction of the main fuse is secured by the attempted passage through the former of an excessive current, no part of which can be carried through the latter after it is blown. This device to manifest the condition of the main safety fuse we consider to be the primary object of the Thalacker patent, as disclosed in the claims in suit and in the specifications. For two purposes, both to prove the patent invalid, and, if it be valid, to limit its scope narrowly, the defendant put in evidence a considerable number of patents, American and British. We need refer to only three.

In the Edison patent, No. 264,659, notice of the blowing of the main fuse is given by a bell carried on an auxiliary conductor in shunt. The auxiliary conductor is not blown by the blowing of the main fuse; but the passage of the excessive current through the auxiliary conductor does no more than ring the bell. The arrangement of the Edison patent is different from that of the Thalacker patent, and is ill-adapted to many places for which the patent in suit was intended. In the Edison device, the auxiliary conductor is not a fuse. Its condition is not seen, as in Thalacker's first claim, but heard. It is not partly enveloped in the casing, as is stated explicitly in Thalacker's claims 2 and 4, and, by implication, in claim one read in the light of the specifications. Its mode of operation is different.

In the patent to Van Depoele, No. 417,122, the combustion of the safety fuse ignites a small cord or other fragile support sustaining a semaphore. The destruction of the support releases the semaphore, which drops out of the inclosing box. The Van Depoele device contains no auxiliary fuse in the proper sense of the word, and its prac-

tical operation is open to numerous objections which do not lie against the patent in suit.

In the British patent to Mordey, No. 19,076 of 1890, the patentee sought principally to set out the advantages of packing a safety fuse in a porous substance which should take up some of the heat engendered by the fusing as well as the minute particles of molten metal. The patent in suit suggests, as old in the art, a nonconducting box or a packing of thin strips of nonconducting material. Mordey's "finely divided or pulverized nonconducting material" may be preferable as a packing. The comparison is not in question here. Again, Mordey states that:

"A small space is or may be left uncovered by this material at some portion of the tube or vessel, to enable the position and condition of the fuse conductor to be observed."

He here refers to an observation, not of the auxiliary, but of the main, fuse, the need of which observation Thalacker sought to avoid. Still again, Mordey says:

"For large currents I prefer to use a small fuse constructed as above described, or otherwise according to my invention, and to shunt it by an ordinary fuse, or by an electro magnetic or other cut-out. This ordinary fuse or cut-out is arranged to carry practically the whole current. In the event of an excessive current, the ordinary fuse melts, or the cut-out acts, but does so with a scarcely perceptible spark. The final rupture of the circuit then occurs in the small special fuse."

Here Mordey's "ordinary fuse," which carries practically the whole current, is fully exposed, and the small packed and covered fuse does not serve as an indicator, but only to prevent the ordinary fuse from "arcking." This effect it produces by itself taking the final break in the current, and so relieving the ordinary fuse. As is said by Prof. Cross, the complainant's expert:

"If the current becomes excessive, the ordinary fuse melts, or the cut-out acts, but with a scarcely perceptible spark, and the final rupture of the circuit then occurs in the small special fuse."

This operation has nothing to do with the patent in suit. Where the Mordey patent uncovers "a small portion of the fuse conductor," there is no auxiliary fuse; and where Mordey shows an auxiliary fuse, the main fuse is quite uncovered, and no indicator is needed or employed.

Of the elements in Thalacker's first claim the main safety fuse and the box or packing which envelop it are old in the art. The gist of Thalacker's patent consists in the combination with these old elements of an auxiliary fuse, whose condition is at all times conveniently observed, so that by reasonable inference the condition of the main fuse may be known. This combination appears to us novel and unanticipated by any of the patents cited. The invention goes beyond the mere details shown, and the patent should receive a construction correspondingly broad. As was said by the learned judge of the Circuit Court:

"While these patents show that Thalacker was not the first to provide an inclosed fuse with an exterior conductor, they contain no suggestion of the use of the auxiliary fuse for indication."

If this be true, we find little difficulty with the issue of infringement. The defendant's device differs from that of the patent in suit only in

the formation of its safety fuse. Instead of a small fuse, purely metallic, in shunt with the main fuse, the defendant has employed a fine wire connecting the main safety fuse with a paste, which conducts the current into the metal cap of the covering case and so returns it to the main line. When the main fuse is blown, the current passing through the highly resisting wire portion of the auxiliary fuse ignites a part of the paste and renders it a nonconductor. The condition of the auxiliary fuse is known, not by looking at the broken wire through a small hole in the covering, as in the patent in suit, but by the discoloration of the paste shown through a similar hole. We regard these differences as immaterial.

Both the complainant and the respondent have argued the questions of invention and infringement without reference to any distinction among the three claims in suit. Therefore we have not analyzed the differing language of these claims, and have confined ourselves to showing that the first claim duly sets out Thalacker's patentable invention and that the defendant has infringed Thalacker's patent.

The decree of the Circuit Court is reversed, the case is remanded to that court, with directions to enter a decree in favor of the complainant on claims 1, 2, and 4, and to proceed otherwise in accordance with law, and the appellant recovers its costs of appeal.

(173 Fed. 607.)

AMERICAN SMELTING & REFINING CO. v. KARAPA.

(Circuit Court of Appeals, Eighth Circuit. October 28, 1909.)

No. 2,981.

1. MASTER AND SERVANT (§ 263*)—PLEADING—GENERAL DENIAL SUFFICIENT.
   A general denial constitutes a good reply to averments in an answer of plaintiff's contributory negligence and his assumption of the risk.
   [Ed. Note.—For other cases, see Master and Servant, Dec. Dig. § 263.*]

2. TRIAL (§§ 418, 420*)—DEMURRER TO PLAINTIFF'S CASE WAIVED BY SUBSEQUENT EVIDENCE FOR DEFENDANT.
   The defendant waives a demurrer to the plaintiff's evidence, or a denial of its motion for judgment on the ground that the plaintiff's evidence establishes no cause of action, by the subsequent introduction of evidence to the merits on its own behalf.
   [Ed. Note.—For other cases, see Trial, Cent. Dig. §§ 980–983; Dec. Dig. §§ 418, 420.*]

3. APPEAL AND ERROR (§ 263*)—EXCEPTION INDISPENSABLE TO REVIEW.
   It is indispensable to the review in a federal appellate court of a ruling upon a request for an instruction to the jury that it should have been challenged by an exception.
   [Ed. Note.—For other cases, see Appeal and Error, Cent. Dig. §§ 1516–1532; Dec. Dig. § 263.*]

4. APPEAL AND ERROR (§ 977*)—RULINGS ON MOTIONS FOR NEW TRIAL DISCRETIONARY AND NOT REVIEWABLE.
   When a federal trial court has jurisdiction to grant or refuse a new trial, its order on the subject is discretionary, and it is not reviewable in an appellate court.
   [Ed. Note.—For other cases, see Appeal and Error, Cent. Dig. §§ 3860–3865; Dec. Dig. § 977.*]

(Syllabus by the Court.)

In Error to the Circuit Court of the United States for the District of Colorado.

Action by John Karapa against the American Smelting & Refining Company. Judgment for plaintiff, and defendant brings error. Affirmed.

William B. Vates, for plaintiff in error.

M. J. Galligan, for defendant in error.

Before SANBORN and VAN DEVANTER, Circuit Judges, and WILLIAM H. MUNGER, District Judge.

SANBORN, Circuit Judge. The plaintiff in error complains of a judgment against it for damages alleged to have been inflicted upon the defendant in error, one of its servants, by its failure to exercise reasonable care to guard a narrow pathway upon which its employé was placed at work. The complaint set forth in detail the character of the place, the nature of the negligence, and the alleged fact that the defendant in error was caused thereby to step off the pathway into an opening 12 feet deep, and was thereby seriously injured. The plaintiff in error, by its answer, denied these averments, and alleged that the injuries of its servant were caused by his contributory negligence, and that he had assumed the risk of working in the place from which he fell. To this answer the defendant in error interposed a reply, wherein he denied each and every allegation contained in the answer. Two of the specifications of error are that this reply was insufficient; but it fairly met the issues it was interposed to present, and these specifications cannot be sustained. A general denial in a reply of allegations in an answer of the plaintiff's contributory negligence and of his assumption of the risk is sufficient.

There is a complaint that the court overruled the motion of the Smelting Company, made at the close of the case of the defendant in error, that the court should direct a verdict in its favor on the ground that the evidence was insufficient to sustain any other conclusion. But the company subsequently introduced evidence upon the merits of the issues in the case, and a defendant in a trial waives his demurrer to the plaintiff's evidence by the subsequent introduction of evidence to the merits in his own behalf. Insurance Company v. Crandal, 120 U. S. 527, 530, 7 Sup. Ct. 685, 30 L. Ed. 740; Railroad Company v. Mares, 123 U. S. 710, 713, 8 Sup. Ct. 321, 31 L. Ed. 296; United States Fidelity & G. Co. v. Board of Com'rs, 145 Fed. 144, 150, 76 C. C. A. 114, 120; Barnard v. Randle, 110 Fed. 906, 907, 49 C. C. A. 177, 178; Insurance Company v. Frederick, 58 Fed. 144, 147, 148, 7 C. C. A. 122, 126; Insurance Company v. Heiserman, 67 Fed. 947, 15 C. C. A. 95; Jefferson v. Burhans, 85 Fed. 924, 927, 29 C. C. A. 487, 490.

Five of the specifications of error challenge the refusal of the court to give five specific instructions; but no exception was taken to the refusal of the court to give any of them, and hence the questions they suggest are not presented for the consideration of this court. It is indispensable, to a review in the courts of the United States of any ruling of the trial court upon a request for an instruction to the jury,

that it should be challenged by an exception taken and recorded at the time, to the end that the attention of the trial judge may be sharply called to the question presented thereby, and that a clear record of his action and its challenge may be made. Hutchins v. King, 1 Wall. 53, 60, 17 L. Ed. 544; Pomeroy's Lessee v. State Bank of Indiana, 1 Wall. 592, 602, 17 L. Ed. 638; Newport News & Miss. Valley Co. v. Pace, 158 U. S. 36, 37, 15 Sup. Ct. 743, 39 L. Ed. 887; Tucker v. United States, 151 U. S. 164, 170, 14 Sup. Ct. 299, 38 L. Ed. 112; Potter v. United States, 122 Fed. 49, 55, 58 C .C. A. 231, 237; Southern Pacific Co. v. Arnett, 126 Fed. 75, 81, 61 C. C. A. 131, 137.

After the verdict the plaintiff in error made a motion for a new trial in the court below on the grounds that the verdict was contrary to the evidence and that it was contrary to the law, and it assigns as error the refusal of the court to set aside the verdict on either of these grounds and its entry of final judgment pursuant to the verdict. But the court below had plenary jurisdiction to grant or to refuse the motion for a new trial, and to enter or to refuse to enter the judgment pursuant to the verdict. And in the national courts an order granting or refusing to grant a new trial, which the court has the power to make, is discretionary with the court, and is not reviewable in a federal appellate court (Chicago, Milwaukee & St. P. Ry. Co. v. Heil, 154 Fed. 626, 629, 83 C. C. A. 400, 403; City of Manning v. German Ins. Co., 107 Fed. 52, 54, 46 C. C. A. 144, 146; Southern Pacific Co. v. Maloney, 136 Fed. 171, 69 C. C. A. 83), and there was no error in the entry of the judgment pursuant to the verdict.

All the specifications of error have now been considered, and, as none of them can be sustained, the judgment below must be affirmed.

It is so ordered.

(173 Fed. 746.)

GEORGE A. SHAW & CO. v. CLEVELAND, C., C. & ST. L. RY. CO.

(Circuit Court of Appeals, Sixth Circuit. November 8, 1909.)

No. 1,936.

1. CONTRACTS (§ 186*)—CONTRACT FOR RAILROAD CONSTRUCTION—CONSTRUCTION.

A provision of a contract for railroad construction, giving the railroad company the right to apply any money due or to become due under the contract to the payment of liens for labor or materials furnished to the contractor, is wholly for the company's benefit, and does not impose any contract obligation upon it to pay such liens.

[Ed. Note.—For other cases, see Contracts, Cent. Dig. § 794; Dec. Dig. § 186.*]

2. COURTS (§ 366*) — FEDERAL COURTS — AUTHORITY OF DECISIONS OF STATE COURTS.

The construction of a state Constitution or statute by the highest court of the state is binding upon the federal courts in cases involving rights which arose after such construction was given.

[Ed. Note.—For other cases, see Courts, Cent. Dig. §§ 954, 957, 960, 968; Dec. Dig. § 366.*

State laws as rules of decision in federal courts, see notes to Wilson v. Perrin, 11 C. C. A. 71; Hill v. Hite, 29 C. C. A. 553.]

3. COURTS (§ 366*)—FEDERAL COURTS—VALIDITY OF STATE STATUTE.

Bates' Rev. St. Ohio, § 3231—1, which gives an absolute lien upon the property of a railroad company for supplies or materials furnished for the construction of its road to any contractor or subcontractor, is unconstitutional and void, as an abridgment of the liberty of contract secured by the Bill of Rights of the state Constitution, under the construction placed on such constitutional provision by the Supreme Court of the state.

[Ed. Note.—For other cases, see Courts, Dec. Dig. § 366.*]

4. CONTRACTS (§ 2*)—LAW GOVERNING—PLACE OF CONTRACT.

Bates' Rev. St. Ohio, § 3207, which requires a railroad company, contracting for construction work, to stipulate in its contract that it will pay out the contract price to the persons and in the order named therein, conceding its validity, can have no application to a contract made in another state for work to be done in such state.

[Ed. Note.—For other cases, see Contracts, Cent. Dig. §§ 2–41, 145; Dec. Dig. § 2.*]

Appeal from the Circuit Court of the United States for the Southern District of Ohio.

Action by George A. Shaw & Co. against the Cleveland, Cincinnati, Chicago & St. Louis Railway Company. Judgment for defendant, and plaintiffs appeal. Affirmed.

E. C. Pyle, for appellants.

George Hoadly, for appellee.

Before LURTON, SEVERENS, and WARRINGTON, Circuit Judges.

LURTON, Circuit Judge. This is a bill asserting a statutory lien in behalf of a subcontractor against a railroad company. The question is quite simple. The Shutt Improvement Company made a contract in the state of Indiana for double-tracking a part of the railway com-

pany's line which lies in Indiana. It was convenient for the Shutt Company to operate a commissary in aid of their work, for the purpose of furnishing groceries and like supplies to their employés. They bought these goods from the appellants, grocers doing business in Cincinnati, and they were delivered at the station of the railroad company in that city; the railroad company having contracted with the Shutt Company to convey all materials and supplies, needed in carrying out the contract, free of charge. After doing a great part of the job, the Shutt Company broke down, and the railroad company finished the contract work at a cost much in excess of the contract price. The contract price, remaining unpaid when the Shutt Company failed, was applied, as far as it would go, in finishing the work and in relieving the property of such claims as were regarded as liens under the Indiana law. The contract between the railroad company and the contractor expressly provided that the former might thus protect itself by the application of funds due, or to become due, under the contract, in discharge of liens in favor of labor or materials furnished to the contractor. This was a provision wholly for the benefit of the owner, and no contract obligation to pay off such liens was imposed or assumed. The Shutt Company owed the appellants a balance, on account, of some $12,000 when it abandoned the work. This claim the railroad company refused to pay or assume, because it was advised that it did not constitute a lien upon its road. After paying the expense of finishing the contract work and such claims against the Shutt Company which it was advised were liens, the Shutt Company was indebted to the railroad company in a large sum on account of payments in excess of the contract price. The appellants in no way attached or garnished the fund reserved out of the contract price, and not a dollar of the contract price remained unpaid when this bill was filed. Neither is it shown that the railroad company came under any contract, express or implied, to pay the debt due to appellants by the Shutt Company. Nor was the conduct of the railroad company in dealing with the Shutt Company, or the appellants, in respect to the contract price, such as to constitute it in any way a trustee for any part of the purchase price in respect to appellants.

The liability of the railroad company on account of this claim must, therefore, arise out of some statute directly imposing a lien upon the appellee's line of railway or fastening some charge upon the contract price. The primary claim is that a statutory lien did arise under the law of Ohio. For the appellee it has been urged that, aside from the question of the validity of the Ohio statute, under which complainant below asserted a lien, the statute, if valid, does not embrace groceries and provisions. It has also been urged that these supplies were furnished to be used upon that part of the line of the appellee's railroad which is situated in the state of Indiana, and that, if any lien was created, it was against the property of the company in Indiana, and as a consequence of some Indiana statute. We shall not consider either of these defenses, but for the purposes of the case will assume that groceries and provisions are "supplies," within the meaning of the Ohio statute, and that the sale and delivery within Ohio created a lien

under the Ohio mechanic's lien statute, which is enforceable in Ohio against the railway as a unitary structure.

The result must turn upon the solution of the question of whether there was any valid statutory lien in favor of a subcontractor for supplies furnished a contractor for railroad construction? There are two acts under which appellants claim a direct or implied lien. One is the act of March 20, 1889 (86 Ohio Laws, p. 120), constituting sections 3231—1 to 3231—5, Bates' Revised Statutes of Ohio. That act provides that for supplies and materials furnished to any contractor or subcontractor for the construction of any railroad, embankment, abutment, pier, side track, or excavation, or for the making of any canal, turnpike, street railway, or other public structure, there shall be an absolute lien on the whole of the property on which labor is done, or to which such materials or supplies have contributed, whether same was done for or furnished at the instance of the owner, "or any contractor or subcontractor." The other Ohio act is one of April 6, 1883 (80 Ohio Laws, p. 99), found now as sections 3207 to 3211, Bates' Revised Statutes of Ohio.

We shall first deal with the act of March 20, 1889, particularly that part which constitutes section 3231—1, Revised Statutes, being the section which declares a lien in favor of subcontractors in express terms. Was it competent for the Ohio Legislature, under the limitations of the organic law of the state, to so abridge the right of an owner in respect of his power of contracting as to impose upon his property, against his will, a lien in favor of third persons who should furnish labor, material, or supplies at the instance of a contractor for an improvement upon the land of such owner, and contrary to the arrangement between the owner and the contractor for the payment of the contract price? The precise question was answered in the negative by the Supreme Court of Ohio in the case of Palmer v. Tingle, 55 Ohio St. 423, 45 N. E. 313. The syllabus of that case, that being the authoritative decision of the Ohio court, reads as follows:

"The inalienable right of enjoying liberty and acquiring property, guaranteed by the first section of the Bill of Rights of the Constitution, embraces the right to be free in the enjoyment of our faculties, subject only to such restraints as are necessary for the common welfare.

"Liberty to acquire property by contract can be restrained by the General Assembly only so far as such restraint is for the common welfare and equal protection and benefit of the people, and such restraining statute must be of such a character that a court may see that it is for such general welfare, protection and benefit. The judgment of the General Assembly in such cases is not conclusive.

"While a valid statute regulating contracts is by its own force read into and made a part of such contracts, it is otherwise as to invalid statutes.

"The act of April 13, 1894 (91 Ohio Laws, p. 135), in so far as it gives a lien on the property of the owner to subcontractors, laborers, and those who furnish machinery, material, or tile to the contractor, is unconstitutional and void. All to whom the contractor becomes indebted in the performance of his contract are bound by the terms of the contract between him and the owner."

The Ohio act there held void was the act of April 13, 1894 (91 Ohio Laws, p. 135). The act referred to amended the former act, now section 3184, Bates' Revised Statutes of Ohio, which gave the lien in fa-

vor of one who should do labor or furnish machinery or materials by virtue of a contract "with the owner or his authorized agent," by giving the lien to any one who should furnish labor or materials "by virtue of a contract with or at the instance of the owner or his agent trustee, contractor, or subcontractor." The difference between that act and the one now involved consists in the fact that the amendatory act of 1894 applied only to section 3184, Revised Statutes, which did not, in express terms, refer to corporations, while section 3231—1 applies to railroads and certain other public service corporations. We shall later consider whether this fact takes the present case outside of the authority of Palmer v. Tingle.

But it is said that this court, in Jones v. Great Southern Fireproof Hotel Company, 86 Fed. 370, 30 C. C. A. 108, held that section 3184, Revised Statutes of Ohio, as amended by the act of April 13, 1894, was not unconstitutional under the Constitution of Ohio, but was valid and enforceable, and that in that view we were affirmed by the Supreme Court in Great Southern Fireproof Hotel Company v. Jones, 193 U. S. 532, 24 Sup. Ct. 576, 48 L. Ed. 778. The lien asserted in Jones v. Great Southern Hotel Company, and enforced by this court, arose before the Ohio court had decided Palmer v. Tingle, and before the Ohio court had decided any case affecting the constitutionality of any act creating a lien in favor of persons having no direct contract with the owner. We were, therefore, not only at liberty, but under obligation, to exercise an independent judgment in respect to the validity of the statute in question. The lien now asserted arose long after the decision in Palmer v. Tingle, and, if that decision is to be regarded as a construction and application of the organic law of Ohio, it is obviously our duty to accept that construction and apply it to the case now under consideration, inasmuch as we are not now dealing with rights which arose before that decision, but with rights under contracts made long since that construction.

The obligatory character of Palmer v. Tingle does not rest upon the fact that it was a decision in respect to the very statute now involved, for that is not the case. Nor does its obligatory effect rest alone upon the similarity of the lien created under the act now involved with the lien under the later act of 1894. Neither does our obligation depend upon the application of any general rule of statutory or constitutional construction announced in that case, or in O'Brien v. Wheelock, 95 Fed. 883, 37 C. C. A. 309, affirmed in 184 U. S. 450, 22 Sup. Ct. 354, 46 L. Ed. 636. No question of statutory construction was involved in Palmer v. Tingle, and none is raised here. What the Supreme Court of Ohio decided in Palmer v. Tingle was that that part of the organic law of Ohio which declared that the "right of enjoying and defending life and liberty" and of "acquiring, possessing, and protecting property," included and involved the right of any owner of property to make any contracts he pleased in respect of improvements to be erected thereon which did not injuriously affect the public welfare. Coming to the application of that constitutional declaration, thus interpreted, the Ohio court said:

"It was not for the common public welfare that the liberty of contract should be taken away from the owner of a building to enable the seller of materials

to collect their value from a man who never purchased them, and has already fully paid the one with whom he contracted for all that he has received."

When considering the weight to be given to Palmer v. Tingle, this court, in recognition of our duty to lean toward an agreement with the Ohio court, though not under obligation to follow it in a case when rights had arisen before that decision, referred to the identity of this constitutional declaration with like provisions in the organic law of other states as raising for our consideration a larger question of constitutional law than might otherwise be the case. In view, therefore, of the fact that the Ohio court had before it no provision of the Ohio Constitution which was peculiar to the Ohio Constitution, we were constrained to differ with that court as to the force and meaning of the words in question as a limitation restraining the Ohio Legislature. In this we were affirmed by the Supreme Court of the United States. But the case is quite different now. The highest court of Ohio, in the exercise of its undoubted authority, construed this declaration in the Ohio Bill of Rights as denying to the Ohio Legislature the power to create a lien upon an owner's property through the unauthorized acts of a principal contractor. The distinction between our obligation in passing upon rights accrued before Palmer v. Tingle, and rights which have accrued since, was well stated by Justice Harlan in Great Southern Hotel Company v. Jones, 193 U. S. 532, 24 Sup. Ct. 576, 48 L. Ed. 778, when that eminent jurist, for the court, said:

"In our opinion, neither the decisions of Palmer v. Tingle, Young v. Lion Hardware Co., 55 Ohio St. 423, 45 N. E. 313, nor any other case in the Supreme Court of Ohio, precluded the Circuit Court from exercising its independent judgment as to the constitutionality of the statute of Ohio here in question. If, prior to the making of the contracts between the plaintiff and McClain, the state court had adjudged that the statute in question was in violation of the state Constitution, it would have been the duty of the Circuit Court, and equally the duty of this court, whatever the opinion of either court as to the proper construction of that instrument, to accept such prior decision as determining the rights of the parties. But, the decision of the state court as to the constitutionality of the statute in question having been rendered after the rights of the parties to this suit had been fixed by their contracts, the Circuit Court would have been derelict in duty if it had not exercised its independent judgment touching the validity of the statute here in question. In making this declaration we must not be understood as at all qualifying the principle that, in all cases, it is the duty of the federal court to lean to an agreement with the state court, where the issue relates to matters depending upon the construction of the Constitution or laws of the state."

But it is said that the Ohio court did not have before it in Palmer v. Tingle the particular act now in question, but another, a general mechanic's lien act, and that the acts here involved apply to railroads and other corporate companies, and that the legislative limitation determined by Palmer v. Tingle was in respect to the contracts of persons and not of corporations. But it is difficult to see why, if the Ohio Legislature has no power to create a lien against the will of an individual owner of real property in favor of persons having no contractual relations with him, it should have such power simply because the owner is an aggregation of persons with corporate powers. Indeed, the Ohio court in Palmer v. Tingle supports its conclusion that the act of 1894 violated liberty of contract by referring to State v.

Lake Erie Iron Company (an officially unreported Ohio case) 33 Ohio Law Bul. 6, by saying:

"It was the infringement of the liberty of contract that induced this court in State v. Lake Erie Iron Company (officially unreported) 33 Ohio Law Bul. 6, to hold the statute unconstitutional which required corporations to pay their employés at least twice in each month."

In Cleveland v. Construction Company, 67 Ohio St. 197, 65 N. E. 885, 59 L. R. A. 775, 93 Am. St. Rep. 670, the Supreme Court held an act void, as an abridgment of liberty of contract, which denied to municipal corporations the right to agree with contractors and subcontractors as to the hours of labor which should constitute a day's labor. In Stewart v. Gardner, 10 Ohio Cir. Ct. R. (N. S.) 408, the circuit court of Lucas county had under consideration the validity of section 3231—1, Revised Statutes of Ohio. The point was made that Palmer v. Tingle was not controlling, because section 3231—1 applied to railroads. It was held in an elaborate opinion that the clause of the Ohio Bill of Rights applies not only to individuals, but to private corporations, and that the Legislature was without power to qualify the right of a railroad company to make contracts in respect to construction or improvements which it could not make with respect to individuals. It was held that Palmer v. Tingle was a controlling authority, and that so much of section 3231—1 as undertook to give to subcontractors for materials or supplies a lien, without the consent of the owner, was unconstitutional. This judgment directly involved the very act now under consideration, and was affirmed, without opinion, by the Supreme Court of Ohio, in 78 Ohio St. 451, 85 N. E. 1132. The affirmance could not have gone upon any other ground than that of the invalidity of the very act under which appellants now assert a lien. It is true that Stewart v. Gardner was decided after the rights of appellants arose, and is not, therefore, so obligatory as Palmer v. Tingle. The decision is, however, of weight sufficient to solve any doubt we might have as to the question now raised.

Neither has the appellant shown any right to equitable relief under his prayer for general relief. This contention is bottomed upon section 3207, Revised Statutes, which reads as follows:

"Sec. 3207. (What Contracts for Railroad Work shall Stipulate; Claims; Order of Priority.) Any person, association of persons, or corporation contracting for the construction of a railroad, depot buildings, water-tanks, or any part thereof, shall be liable to and shall pay to each person performing labor or furnishing materials stipulated for in the contract with the owner of the road, under a contract express or implied with the original contractor, or with any subcontractor, for the whole or any part of the work stipulated in the original contract with the owner of the railroad; and the railroad company shall provide, in its contract with any person, association of persons, or corporation for the construction of its road, or any part thereof, that payments under its said contract shall be made in the following order of priority: First, to the persons performing labor or furnishing materials, or furnishing boarding on the order of any contractor or subcontractor to persons employed by them, or either of them, in furnishing materials or labor for or in the construction of such railroad, without preference. Second, to any subcontractor, any balance due under his contract after payment of his or their liability to persons performing labor or furnishing materials or boarding, under his or their contract. Third, to any contractor, or construction company intervening between a subcontractor and the railroad company, in the order of such in-

tervention from such subcontractor upward to the owner of the railroad, any balance due after payment by the company, of amounts found due in the order of priority above stipulated."

That section, by providing that the contracting railroad owner shall pay out of the contract price "each person" who shall labor or furnish materials or supplies stipulated for in the contract, in the order named in the section, regardless of any contract relation between the owner and such person, manifestly interferes quite as much with the owner's liberty of contract as if an independent lien had been declared in favor of each person so to be paid. Indeed, the restraint upon the owner's right of liberty of contract is even more effectual, for the owning railroad is required to stipulate in its contract that it will pay out the contract price to the persons and in the order named in the section.

Aside from the obvious fact that, if section 3231—1 et seq. is obnoxious because the owner is subjected to liability to persons with whom he has no contract, this section is void for the same reason, there is the further difficulty in this case, namely, the contract made by the railroad company was made in the state of Indiana, to be wholly performed by the Shutt Company in that state. A contract made in Indiana, to be exclusively performed in that state, was not subject to the requirement of the Ohio statute that the owning railroad shall provide, in its contract, for the payment of the contract price to labor and supply claims in the order named in the statute. No such provision was inserted in the contract with the Shutt Company, and no ground exists upon which we can hold that the term is to be read into the agreement for the benefit of persons having no contractual relations with the railroad company.

Neither is there any principle of general equity upon which appellants can obtain any relief against the appellee. No facts are shown which raise any trust, or in any way constitute the relation of debtor or creditor, between appellants and appellee. No fraud was practiced upon which a liability can be raised, and the appellants must look alone to the Shutt Improvement Company for the balance of their account.

Decree affirmed.

(173 Fed. 577.)

UNITED STATES CONSOL. SEEDED RAISIN CO. v. CHADDOCK & CO.

(Circuit Court of Appeals, Ninth Circuit. November 3, 1909.)

No. 1,736.

1. APPEAL AND ERROR (§ 167*)—GROUNDS FOR DISMISSAL OF APPEAL—STIPULATION NOT TO APPEAL.

A stipulation by the parties to a suit that no appeal shall be taken from the decree of the trial court, if based on a valid and legal consideration, will be enforced by the appellate court, and an appeal, if taken, dismissed.

[Ed. Note.—For other cases, see Appeal and Error, Cent. Dig. §§ 1008, 1009; Dec. Dig. § 167.*]

2. APPEAL AND ERROR (§ 167*)—DISMISSAL OF APPEAL—ENFORCEMENT OF STIPULATION NOT TO APPEAL.

An appeal dismissed, as in violation of a valid stipulation not to appeal.

[Ed. Note.—For other cases, see Appeal and Error, Cent. Dig. §§ 1008, 1009; Dec. Dig. § 167.*]

Appeal from the Circuit Court of the United States for the Northern Division of the Southern District of California.

Suit by the United States Consolidated Seeded Raisin Company against Chaddock & Co. From a decree dismissing the bill, complainant appeals. Motion to dismiss appeal sustained.

The appellant, as owner of the patent issued to George Pettit, Jr., and John D. Sprower, on February 14, 1899, for a fruit-seeding machine, brought suit in the court below against the appellee, alleging that the appellee had been making, using, and selling machines containing the said invention, and praying for an accounting and an injunction. The appellee answered, denying infringement, and alleging, among other defenses, that the appellant was equitably estopped to assert that the appellee's machine infringed its patent, for the reason that more than two years prior to the commencement of the suit the appellee, at the request of the appellant, allowed and permitted it to inspect the machines then and ever since used by the appellee, that said machines were carefully inspected and scrutinized by the appellant, and that thereupon the appellant informed the appellee that said machine so made and used by it did not in any respect infringe any of the rights of the appellant or their said patent; that, relying upon said statement and acquiescence, the appellee had continued to use the machines and had expended large sums of money in connection therewith. On the issues and the evidence taken in the court below the trial court found that claim 17 of the appellant's patent, being the claim which was in controversy, was valid, and that the appellee's machines fell within the terms thereof, but that by reason of the conduct of the appellant it was estopped to allege that the appellee had infringed its patent, and on the ground of estoppel solely the court dismissed the bill. Testimony was taken on the trial concerning an experimental use made by the appellee, more than a year after the commencement of the suit, of a new machine, made at the instance of E. L. Chaddock, one of the stockholders of the appellee, under an invention for which he subsequently obtained letters patent. The testimony was given by two witnesses, one of whom was the assistant secretary of the appellant, and the other was a manufacturer of raisin seeding machines, both of whom were invited by the appellee to inspect the machine. They testified that they did so, that the machine was operated for their inspection, and their testimony tended to show that it infringed the appellant's patent. The testimony so taken was received over the appellee's objection that it had no reference to any machine involved in the controversy. As to that machine, the decree of the court below recites as follows: "And it also appearing to the satisfaction of the court that the

use of the fourth machine, referred to in the testimony, being experimental, does not constitute an infringement of the patent in suit." The appellant appealed from the decree.

John H. Miller, William K. White, and Horace G. Platt, for appellant.

L. L. Cory, for appellee.

Before GILBERT and MORROW, Circuit Judges, and HUNT, District Judge.

GILBERT, Circuit Judge (after stating the facts as above). The appellee has moved to dismiss the appeal on the ground that the appellant by its written agreement had relinquished its right to appeal from the decree. It is shown that after the cause had been argued and submitted in the court below, and before the decision thereof, the appellee, together with E. G. Chaddock, E. L. Chaddock, and John Chaddock, as parties of the first part, entered into an agreement with the appellant, as party of the second part, in which, after referring to the patents of the respective parties, it was recited that:

"Whereas, many conflicting claims have arisen between the holders and owners of said respective patents, and which have resulted in litigation, which is expensive and otherwise injurious to the business and interests of the respective parties hereto, and it is the desire of said respective parties hereto to make and enter into an arrangement whereby and during its continuance there would be an amicable arrangement and adjustment between them of their respective controversies, and in the hope of a final, just, and amicable settlement of all disputes and differences."

In the agreement it was covenanted that so long as the parties of the first part shall deal exclusively in, and shall purchase, sell, and handle, only seeded raisins seeded, processed, and packed by the party of the second part, and no other, the parties of the first part do lease and demise unto the party of the second part, for a term of three years, the Chaddock raisin seeding plant at an annual rental of $15,000, provided, however, that, should the said suit then pending and undecided be decided in favor of the appellee, the annual rental should be $20,000. Then follows this proviso:

"And provided, further, that the judgment which shall be rendered in said Circuit Court in said action or suit, whether the same shall be in favor of said plaintiff or of said defendant, shall be final, and shall not be appealed from or otherwise assailed, in any manner or mode whatsoever, by either or any of the parties hereto or thereto, except, only, that if by said judgment or decree it shall be held and adjudged that the patent belonging to said party of the second part, and concerning which the said action or suit is brought, is invalid, or that the same is not infringed upon by any machine, or machines, belonging to said Chaddock & Co., or by any machine described in and claimed by said letters patent granted to said E. L. Chaddock, above referred to, said party of the second part may appeal from said judgment, or take such other course with reference thereto, and for the protection of its rights in the premises, as it may be advised, and except, further, that if the decree or judgment rendered in said action or suit shall be in favor of said party of the second part, and shall be sufficient in its terms to cover a machine built under and in accordance with said patents held by E. L. Chaddock, and to hold that such a machine infringes the patent of said party of the second part, then and in that event said Chaddock & Co. may appeal from the said judgment or decree, or take such other course to obtain a review or correction of said judgment or decree as it may be advised."

The agreement is of great length, and contains numerous other provisions, but none bearing upon the question of the right to appeal. The right of the appellant to prosecute the appeal, in view of the terms of the agreement, depends upon the construction to be given to the decree. The appellant does not contend—and, indeed, the contention, if made, could not be sustained—that the decree holds its patent invalid; but it contends that by virtue of the decree it is adjudged that the appellant's patent is not infringed upon by the machines used by the appellee. We are unable to agree with this contention. There was no finding whatever upon the question of infringement. Having determined that an equitable estoppel arose from the conduct of the appellant, the court found it unnecessary to enter upon a discussion of the question of infringement. The decree says in substance to the appellant:

"It is immaterial whether the machines used by the appellee infringe upon your machine, for by your conduct you are estopped to allege infringement."

But the appellant points to the machine made under the letters patent granted to E. L. Chaddock during the pendency of the suit, and the experimental use which was made thereof, and insists that, inasmuch as the court held that such use of the machine was not an infringement of the appellant's patent, that finding, within the express terms of the stipulation, secures to it the right to appeal. To this it is a conclusive answer to point to the fact that in the decree of the court below there was no decision on the question whether that machine did or did not infringe the appellant's patent. The court did not hold that it was not an infringing machine, but held that its use by the appellee was not an infringing use, for the reason that it was only experimental. There was no decision that the machine itself, as constructed, was not an infringing machine. By the terms of the stipulation it was only in case that the court held that the appellant's patent was "not infringed upon by any machine belonging to or theretofore used by the appellee, or by any machine described in the claim by letters patent issued to E. L. Chaddock," that the appellant was to have a right to appeal. The purpose of the agreement was to end the litigation, and its purport is that the parties thereto were to abide by the decision of the court, unless thereby it should be decreed that the appellant's patent was invalid, or that the appellant's machines were so constructed, devised, or arranged as to avoid infringement thereof. In short, the appellant reserved the right to appeal only in case the decree affected the integrity of its patent rights. This, it is clear, the decision did not do.

While in some jurisdictions it has been held that a mere promise or agreement not to prosecute an appeal will not divest an appellate court of its jurisdiction (Sanders v. White, 22 Ga. 103; Fahs et al. v. Darling et al., 82 Ill. 142; Runnion v. Ramsay, 93 N. C. 410), the contrary has been held in other jurisdictions; and it seems to be universally held that, where such an agreement is made upon a valid and legal consideration, either before or after trial, it will be enforced in an appellate court, and the appeal, if taken, will be dismissed (Townsend v. Masterson, etc., 15 N. Y. 587; Cole v. Thayer, 25 Mich. 212; Oliver v. Blair [Cal.] 5 Pac. 917; Saling v. German Savings Bank [Com. Pl.]

8 N. Y. Supp. 469; Commonwealth v. Johnson, 6 Pa. 136; Wheeler v. Floral M. & M. Co., 10 Nev. 200; Hill v. Hermans, 59 N. Y. 396; Mackey, Executor, v. Daniel, 59 Md. 484; Emerick v. Armstrong et al., 1 Ohio, 513; Johnson v. Halley, 8 Tex. Civ. App. 137, 27 S. W. 750). In Townsend v. Masterson, etc., supra, it was said:

"It is insisted by the defendant's counsel that the jurisdiction of this court is limited to hearing appeals upon their merits, and that it cannot enforce stipulations made by the parties in the subordinate courts. But certainly the duty of hearing appeals involves the jurisdiction of determining whether a particular case is properly before us on appeal. It is perfectly competent for the parties to determine, in the preliminary steps of the litigation, whether they will place the question in dispute in a condition to be reviewed here. They may omit to except to the decision of the court before whom the primary decision is made, or, after excepting, they may waive or abandon the exception absolutely or to a modified extent. There is no reason, therefore, why they may not mutually agree that exceptions which have been taken shall only be effectual to sustain an appeal to the General Term of the same court."

The appellant makes the point that the objection to taking the appeal should have been presented in the court below, and that it comes too late when presented for the first time in this court. We find no substantial ground for so holding. The agreement was not on file in the court below, and the order allowing the appeal was made by the court apparently in ignorance of its existence. In accepting the service of the assignments of errors, counsel for the appellee reserved "all exceptions and objections to the taking of the appeal." There was no waiver, therefore, of the rights secured to the appellee by the agreement. The objection to the jurisdiction of the appellate court to entertain an appeal in such a case is properly addressed to that court. It is so held in the cases above cited.

The motion to dismiss must be allowed.

(173 Fed. 580.)

LILIENTHAL et al. v. CARTWRIGHT.

(Circuit Court of Appeals, Ninth Circuit. October 18, 1909.)

No. 1,664.

1. EVIDENCE (§ 458*)—CONTRACTS—INTENTION OF PARTIES.

In an action on a written contract, by which defendant, who owned a hop farm, agreed to sell to plaintiff the crop on such farm for the ensuing two years, the defense was that it was orally agreed, both before and after the contract was signed, that it should be void or should terminate in case he should sell his land, and that he did sell it. *Held*, that it was not error to admit evidence of a similar understanding at the time of the making of a contract two years before between the same parties, and that on the sale by defendant of a part of his land the contract was modified accordingly, where the jury were instructed that such evidence was not to be considered on the question whether the contract in suit was modified, but only to aid in determining the condition of the minds of the parties when it was made, and the probability that the modification claimed would be assented to by plaintiff.

[Ed. Note.—For other cases, see Evidence, Cent. Dig. § 2083; Dec. Dig. § 458.*]

2. ESTOPPEL (§ 78*)—ACTION FOR BREACH—DEFENSES.

Defendant entered into a contract to sell to plaintiffs the hops raised by him on his farm for the ensuing two years. *Held*, in an action to recover damages for breach of such contract, that defendant was entitled to show as an estoppel that it was agreed when and after the contract was made that it should terminate and not be enforced in case he sold his farm, and that when he contemplated such sale he was assured by plaintiff of the same thing, and made the sale in reliance on such assurance.

[Ed. Note.—For other cases, see Estoppel, Cent. Dig. §§ 204–210; Dec. Dig. § 78.*]

In Error to the Circuit Court of the United States for the District of Oregon.

Action by Albert Lilienthal and Philip N. Lilienthal, partners as Lilienthal Bros., against J. R. Cartwright. Judgment for defendant, and plaintiffs bring error. Affirmed.

On March 7, 1902, the plaintiffs in error, who were plaintiffs in the court below, entered into two contracts with the defendant in error, defendant in the court below, by the terms of which the latter agreed to complete the cultivation of about 35 acres of land in Harrisburg, Or., and harvest, cure, and bale the hops grown thereon for the two years of 1903 and 1904, and deliver the same to the plaintiffs between the 1st and 31st days of October of the respective years at the agreed price of 10 cents per pound. Each contract provided for the delivery of 30,000 pounds of hops grown on the premises described, and such hops should not be the product of fuggle vines, nor a first year's planting, etc. In 1903, and again in 1904, plaintiffs offered to perform their part of the contracts for the respective years by tendering payment therefor; but the defendant refused to perform his part of the contracts by the delivery of the hops. Thereafter plaintiffs brought two separate actions against the defendant to recover in each case damages for breach of the particular contract.

The defense in each case, as set up in the answer, was that after the contract was made, on the 7th day of March, 1902, "the plaintiffs represented and agreed to and with the defendant that if the defendant should sell the premises, or any part thereof, described in the said contract, that the said contract should be and become void and inoperative as to the land so sold, and then and there agreed with the defendant that he might sell the said lands described in the said contract, and that the defendant would be released by the said sale from any obligation to the plaintiffs under or by virtue of said contract." The defendant sold the farm in question on the 8th day of November, 1902, and did not thereafter cultivate the same, or raise any hops thereon, or have any interest in the crops that were raised thereon, and did not deliver any hops to the plaintiffs. It was alleged in the defendant's answer that plaintiffs ought not to be permitted to allege that the contracts described in the complaint were either of them in force at any time after the 8th day of November, 1902, or to allege or prove that the defendant was obliged, under the terms of said contracts, to deliver to the plaintiffs the hops raised upon the said premises, or any part thereof, or to allege or prove that the defendant was guilty of any breach of the terms or provisions of said contracts, or to allege or prove that the plaintiffs had been damaged in any sum whatever by the alleged breach of said contracts relied on in the complaint.

The cases were by order of the court consolidated and tried together before the same jury, resulting in a verdict for the defendant in each case. In the course of the trial the court admitted testimony, over the objection of the plaintiffs, tending to show that with respect to a prior agreement between the parties, entered into in December, 1900, respecting the sale of hops, the agent of the plaintiffs told the defendant that the contract would be void or at an end if he sold his land. The court also admitted testimony, over the objection of the plaintiffs, tending to show that before and after the signing of the

contracts on March 7, 1902, the agent of the plaintiffs told the defendant that if he sold his land that would end the contracts for the delivery of the hops.

J. N. Teal and Wirt Minor, for plaintiffs in error.

M. L. Pipes, J. K. Weatherford, and John R. Wyatt, for defendant in error.

Argued before GILBERT, ROSS, and MORROW, Circuit Judges.

MORROW, Circuit Judge (after stating the facts as above). The errors assigned may be reduced to two questions—the first relating to the admission of evidence tending to prove a statement alleged to have been made by the agent of the plaintiffs to the defendant in December, 1900, at the time of making prior contracts for the sale of hops, to the effect that the contract (referring to the original contract) would be void or at an end if the defendant sold the land; and, second, relating to the admission of evidence tending to prove statements alleged to have been made by the same agent of the plaintiffs to the defendant, substantially to the same effect, made both before and after the contracts for the years 1903 and 1904 were executed on March 7, 1902. Both of these questions arise in the application of the common-law rule against the admission of parol testimony to vary the terms of a written contract. The rule in the state of Oregon, as it has been enacted into law, is in the following words:

"When the terms of an agreement have been reduced to writing by the parties, it is to be considered as containing all those terms, and therefore there can be, between the parties and their representatives or successors in interest, no evidence of the terms of the agreement other than the contents of the writing, except in the following cases."

The exceptions are not material to the present case, and therefore need not be stated. With respect to the first question the court admitted the testimony to which objection was made, not as tending to vary any of the terms of the written contract, but for the single purpose of aiding the jury in determining the condition of the minds of the parties, or of the plaintiffs, and their disposition towards entertaining such a proposition, or assenting to consider the original contract void, should a sale of the premises be made by the defendant, and the testimony was so limited by the court in its instructions to the jury. The court said:

"I further instruct you that the written contract, in so far as it pertains to this controversy or has relation thereto, was concluded when the same was signed by Cartwright. All the terms of the contract were agreed upon at that time, and by concert of action of the parties reduced to writing, and when so formulated it is conclusively presumed to contain all that the parties intended to have introduced therein. No other agreement than such as is evidenced by the contract can the parties rely upon as being made prior to the time such signing was had."

The court further instructed the jury with respect to this testimony:

"I have permitted testimony to go to you touching conversations that might have been had between the parties, relative to the disposal of the land by Cartwright, prior to the time when the contract was concluded. This should be considered by you, not as tending to vary any of the terms of the written contract, for it cannot be so varied, but for the single purpose of aiding you in determining the condition of the minds of the parties, or of the plaintiffs, and their disposition towards entertaining such a proposition, or assenting to

considering the original contract void, should a sale of the premises be made by Cartwright. Such an arrangement, if one was had subsequent to the signing, must be substantiated and proven by what was done and said also subsequent to that time, and the defendant's case must be made on that basis, and none other."

The rule under which this testimony was admitted is analogous to the rule that admits parol testimony to show the situation of the parties at the time the writing was made and the circumstances under which it was executed. Fire Insurance Association v. Wickham, 141 U. S. 564, 576, 12 Sup. Ct. 84, 35 L. Ed. 860; McElroy v. British American Assur. Co., 94 Fed. 990, 997, 36 C. C. A. 615; North American Transportation Co. v. Samuels, 146 Fed. 48, 55, 76 C. C. A. 506.

It appears from the evidence in the record that the circumstances under which the contracts in suit were made arose out of this situation of the parties: In the year 1900 the defendant was the owner of 55 acres of land, of which about 45 acres were in hops; that in December, 1900, he entered into five written contracts with the agent of the plaintiffs for the sale of the hops on this land for the following years; and the evidence tended to show that before the defendant signed these contracts he was told by the agent of the plaintiffs that the written contracts would not prevent him from selling the land—that the contracts would be at an end. It appears that he did sell some portion of the land—probably about 20 acres, though the evidence is not clear upon that point—and the original written agreements were surrendered up and new agreements executed in their place.

This testimony as to the statement of the plaintiffs' agent was admitted, not as tending to vary any of the terms of the written contracts, but as tending to show that a statement upon a collateral subject relating to the sale of the land was one that had been made before by the plaintiffs' agent, and under similar circumstances might reasonably be made the subject of a verbal agreement with respect to the contracts in suit. In this aspect we think the evidence was properly admitted.

With respect to the second question the defendant set up in his answer the verbal agreement with the agent of the plaintiffs to the effect that if the defendant should sell the premises, or any part thereof, described in the written contracts of March 7, 1902, then the said contracts should become void and inoperative as to the land so sold, and that in pursuance of such agreement and in reliance upon its terms defendant sold the land, and did not thereafter cultivate the same, or have any interest in the crops raised upon the land. The defendant relied upon the evidence of these facts as an estoppel. The evidence was admitted by the court, and, we think, properly.

The court instructed the jury upon this question as follows:

"Now, to advance another step in the course of the pleadings and trial, the defendant has set up by his answer that the parties, namely, himself and the plaintiffs, had an agreement or understanding between them, after the contract denoted by the writing had been concluded, that if the defendant should sell the land the written contract would be and become nugatory and void, and its performance would not be insisted upon. It was within the power and privilege of the parties to modify the contract, either by writing or verbally, after it had been concluded, and such modification would be binding as the original

contract. So it was within the power and privilege of the plaintiffs to agree or arrange with the defendant that he would be privileged to sell the land upon which the hops were to be grown, and that thereafter, if sold, the parties should consider the contract as at an end. And it is a question for you to determine whether such an understanding was had subsequent to the time of concluding the original contract. The defense thus set up proceeds upon the idea or ground of estoppel; that, such an understanding having been had, if you so find, the defendant acted thereon and sold the premises; and that, the defendant having been thus led to act through the agreement thereto by the plaintiffs, plaintiffs should not now be permitted to assert the contrary, and to insist upon the performance by defendant of any conditions of the original contract."

The law is here clearly and correctly stated. Was the testimony to which the defendant refers properly admitted? We think it was. The defendant was the owner of a tract of land upon which he had proposed to raise hops, and he had entered into an agreement with the plaintiffs for the sale of these hops for two successive years. Such an agreement might interfere with the sale of the land. Defendant testified that he said to plaintiffs' agent:

"Suppose I sell the rest of the land; the contract is void?"

To which the agent replied:

"Yes; that is the end of our contract. You don't have to deliver no hops only what's growed on that piece of ground."

The defendant further testified that subsequently he told the agent he was going to sell the property, that he had already made a deal, and that he would deliver no more hops, and the agent said "that it was all right." The plaintiffs' agent denied that he had any such conversation with the defendant; but whether any such conversation took place was, of course, a question for the jury.

If, however, defendant's testimony is true it tended to establish the fact that plaintiffs are now asserting a claim which they or their agent induced the defendant to believe they would not rely on, and upon the faith of which defendant placed himself in a position where he could not carry out his contracts. In Cairncross v. Lorimer, 3 Macq. 828, Lord Campbell said:

"The doctrine * * * is to be found, I believe, in the laws of all civilized nations, that if a man, either by words or by conduct, has intimated that he consents to an act which has been done, and that he will offer no opposition to it, although it could not have been lawfully done without his consent, and he thereby induces others to do that from which they otherwise might have abstained, he cannot question the legality of the act he had so sanctioned, to the prejudice of those who have so given faith to his words or to the fair inference to be drawn from his conduct."

In Dickerson v. Colgrove, 100 U. S. 578, 25 L. Ed. 618, the Supreme Court of the United States refers to the case of Faxton v. Faxon, 28 Mich. 159, as an authority upon this subject. In that case a mortgagee holding several mortgages prevailed on a son of the deceased mortgagor, then intending to remove to a distance, to remain on the premises and support the family, by assuring him that the mortgages should never be enforced. The son supported the family, and the property grew in value under his tillage. After a lapse of several years the mortgagee proceeded to foreclose. He was held to be es-

topped by his assurances, upon which the son had acted. The Michigan court said:

"The complainant may have estopped himself without any positive agreement, if he intentionally led the defendants to do or abstain from doing anything involving labor or expenditure to any considerable amount, by giving them to understand they should be relieved from the burden of the mortgages. In Harkness v. Toulmin, 25 Mich. 80, and Truesdale v. Ward, 24 Mich. 117, this principle was applied, in the former case to the extent of destroying a chattel mortgage, and in the latter of forfeiting rights under a land contract, where parties were led to believe they were abandoned. There is no rule more necessary to enforce good faith than that which compels a person to abstain from asserting claims which he has induced others to suppose he would not rely on. The rule does not rest on the assumption that he has obtained any personal gain or advantage, but on the fact that he has induced others to act in such a manner that they will be seriously prejudiced if he is allowed to fail in carrying out what he has encouraged them to expect."

This defense is available in law. Kellogg-Mackay-Cameron Co. v. Havre Hotel Co. et al., 97 C. C. A. 415, 173 Fed. 249.

The judgment of the Circuit Court is affirmed.

(173 Fed. 585.)

THOMAS v. WOODS et al.

(Circuit Court of Appeals, Eighth Circuit. September 11, 1909.)

No. 2,914.

1. BANKRUPTCY (§ 440*)—APPEAL AND REVISION OF PROCEEDINGS—MODE OF REVIEW.

The petition of a trustee in bankruptcy, filed in the bankruptcy court, to have certain adverse claims and liens on property belonging to the estate declared void, and for a sale of the property free and clear of the same, has all the elements of a suit in equity, and the decision therein is reviewable by the Circuit Court of Appeals on appeal, under Bankr. Act July 1, 1898, c. 541, § 24a, 30 Stat. 553 (U. S. Comp. St. 1901, p. 3431).

[Ed. Note.—For other cases, see Bankruptcy, Cent. Dig. § 915; Dec. Dig. § 440.*

Appeal and review in bankruptcy cases, see note to In re Eggert, 43 C. C. A. 9.]

2. BANKRUPTCY (§ 293*)—JURISDICTION OF COURTS—PROPERTY IN OTHER JURISDICTIONS.

On the filing of a petition in bankruptcy, all property held by or for the bankrupt is brought within the custody of the court of bankruptcy, and upon adjudication that court is vested with jurisdiction to determine all liens or interests affecting it, which jurisdiction is coextensive with the United States.

[Ed. Note.—For other cases, see Bankruptcy, Cent. Dig. § 413; Dec. Dig. § 293.*

Jurisdiction of federal courts in suits relating to bankruptcy, see note to Bailey v. Mosher, 11 C. C. A. 313.]

3. BANKRUPTCY (§ 3*)—CONSTITUTIONAL PROVISIONS—UNIFORMITY OF ACTS.

The constitutional requirement that a bankruptcy law shall be uniform throughout the United States means no more than that it shall by its terms be applicable alike to all of the states, and does not require uniformity in its operation on the varying rights of debtor and creditor under the laws of the several states. Such provision has no bearing on

the right of dower of a bankrupt's wife, which depends entirely on the state laws.

[Ed. Note.—For other cases, see Bankruptcy, Cent. Dig. § 1; Dec. Dig. § 3.*]

4. BANKRUPTCY (§ 143*) — DOWER RIGHTS OF BANKRUPT'S WIFE — LAW GOVERNING.

The right of a bankrupt's wife to dower in lands owned by him is governed by the laws of the state in which the land is situated, and is not affected by the right of homestead and exemption given by the law of his domicile.

[Ed. Note.—For other cases, see Bankruptcy, Cent. Dig. § 217; Dec. Dig. § 143.*]

5. DOWER (§ 2*)—NATURE OF ESTATE—MISSOURI STATUTE.

Under Rev. St. Mo. §§ 2933, 2946 (Ann. St. 1906, pp. 1690, 1698), a wife is entitled to dower in lands acquired by the husband in that state, unless she has released the same, without regard to whether the parties are residents or nonresidents.

[Ed. Note.—For other cases, see Dower, Cent. Dig. §§ 4, 5; Dec. Dig. § 2.*]

6. BANKRUPTCY (§ 143*) — DOWER RIGHTS OF BANKRUPT'S WIFE — LAW GOVERNING.

Bankruptcy acts are intended to deal only with the property of the debtor, which is subject to his debts and cannot affect his wife's dower interest, which by the law of the state can neither be alienated nor extinguished by him nor seized by his creditors. Bankr. Act July 1, 1898, c. 541, § 8a, 30 Stat. 549 (U. S. Comp. St. 1901, p. 3425), providing that the death of a bankrupt shall not abate the proceedings, which shall be conducted in the same manner as though he had not died, "provided that in case of death the widow and children shall be entitled to all rights of dower and allowance fixed by the laws of the state of the bankrupt's residence," applies by its terms only in case of the bankrupt's death, and in that case the proviso, inserted out of an abundance of caution, is not intended to restrict the widow's dower rights, but to preserve such rights as may have been rendered doubtful by the prior proceedings, and where the bankrupt is still living such proviso does not prevent his wife from asserting her inchoate right of dower in his lands in accordance with the laws of the state in which they are situated.

[Ed. Note.—For other cases, see Bankruptcy, Cent. Dig. § 217; Dec. Dig. § 143.*]

Riner, District Judge, dissenting.

Appeal from the District Court of the United States for the District of Kansas.

In the matter of the estate of William E. Thomas, bankrupt. From an order made on the cross-petition of Frank E. Lewis, trustee, Kate S. Thomas appeals. Reversed.

The Kansas City Coal & Coke Company was a corporation organized under the laws of Kansas by Charles J. Devlin and William E. Thomas, who held its entire capital stock. Its principal place of business was in Kansas City, Mo., where it maintained extensive coal yards situated upon the real property involved in this proceeding. The title to the property was taken in the name of Devlin and Thomas, each taking an undivided one-half interest. The corporation, Devlin, and Thomas have been severally adjudged bankrupts in the United States District Court for the District of Kansas, and their estates are now in the hands of trustees duly appointed in those proceedings. The trustee of the corporation, William S. Woods, filed a petition in the court of bankruptcy against the other trustees and parties claiming under Devlin and Thomas, alleging that the corporation was in fact the owner of the real

property, having paid the full consideration therefor, and that the title was taken in the name of Devlin and Thomas, as above mentioned, in trust for it. Devlin and Thomas, before they were adjudged bankrupts, made several conveyances of the lots, which are charged in the petition to have been given in fraud of the bankruptcy law. Mary A. J. Devlin, another of the defendants, is the wife of Charles J. Devlin, and it is alleged that she claims rights of dower in the property, the title to which stood in the name of her husband. The relief asked in the petition is that a decree be entered establishing the title of Woods as trustee, and adjudging that the defendants have no right, title, or interest in the property, and directing its sale, free and clear of all liens and claims whatsoever. The defendant Reeves, as trustee in bankruptcy for Charles J. Devlin, filed his answer, claiming title to the property, as did also Frank E. Lewis, as trustee in bankruptcy for W. E. Thomas. Lewis also filed a cross-bill, asking that his title to the property standing in the name of Thomas be established by judgment of the court. It was further averred in the cross-bill that the appellant here, Kate S. Thomas, the wife of W. E. Thomas, had commenced a suit in the state courts of Missouri to have her contingent right of dower in the property standing in the name of her husband adjudged and established, thereby clouding the title to the property and impairing its value as an asset of the estate. An injunction was asked restraining the further prosecution of this suit. Thereupon a citation was issued to Mrs. Thomas, requiring her to show cause why the injunction should not be granted. She appeared specially, and filed a plea denying the jurisdiction of the court, either over her person or the subject-matter of the controversy. This plea was heard and overruled. She then answered, again challenging the jurisdiction of the court, but setting up her claim of dower, and asking that, if the court should hold that it had jurisdiction, her dower interests might be preserved. The matter was heard upon this answer and the cross-bill, without the taking of evidence, and it was adjudged that the defendant Kate S. Thomas had no right to an inchoate dower interest, or otherwise, in any of the property mentioned in the cross-bill, and a permanent injunction was issued restraining her from further prosecuting the action in the state court. Against this decree Mrs. Thomas sued out the present appeal.

Inghram D. Hook (W. W. Hooper, on the brief), for appellant.

Denton Dunn (Charles Blood Smith, Henry D. Ashley, and William S. Gilbert, on the brief), for appellees.

Before ADAMS, Circuit Judge, and RINER and AMIDON, District Judges.

AMIDON, District Judge (after stating the facts as above). At the outset we are confronted with the question which has become a part of nearly every bankruptcy cause in an appellate court, namely: Should the review have been sought by appeal or petition? The confusion existing on this subject has been frequently confessed by the courts. In re McMahon, 147 Fed. 684, 77 C. C. A. 668; Coder v. Arts, 213 U. S. 223, 232, 29 Sup. Ct. 436, 53 L. Ed. 772. The classification of matters in bankruptcy as "proceedings in bankruptcy" and "controversies arising in bankruptcy proceedings" is vague and in actual application has bewildered the courts and the legal confession. It is quite manifest that, when the decision of a trial court in a "bankruptcy proceeding" is brought under review in an appellate court, it presents a "controversy," and of necessity this is also a "controversy arising in a bankruptcy proceeding." The phrases, therefore, upon which this classification is based, are tautological. Again, the bankruptcy act (Act July 1, 1898, c. 541, 30 Stat. 544 [U. S. Comp. St.

1901, p. 3418]) itself uses the phrase "proceedings in bankruptcy" in a double sense. Section 23 provides as follows:

"The United States Circuit Court shall have jurisdiction of all controversies at law and in equity as distinguished from proceedings in bankruptcy between trustees as such, and adverse claimants, concerning the property acquired or claimed by the trustees," etc.

Here the term "proceedings in bankruptcy" embraces "controversies arising in bankruptcy proceedings," as well as "bankruptcy proceedings proper," and sets them both over against plenary suits between trustees and adverse claimants (instituted by bill or complaint, with subpœna or summons), touching rights or property not in the custody of the court. In section 24b, however, the term "proceedings in bankruptcy," as construed by the courts, has been given a narrower meaning, and has been set over against "controversies arising in bankruptcy proceedings," as used in section 24a. Here it has been thought to mean any of the administrative acts intervening between the filing of the petition and the granting of the discharge, as distinguished from those "controversies arising in bankruptcy proceedings" on petition, which would have been the subject of plenary suits if the estate had not been in the custody of a court of bankruptcy. The confusion that has resulted from the attempt of the courts to apply this classification to actual litigation affords strong support for the decisions of this court that the methods of review provided by the bankruptcy act are not mutually exclusive but cumulative. In re McKenzie, 142 Fed. 383, 73 C. C. A. 483; Dodge v. Norlin, 133 Fed. 363, 66 C. C. A. 425; In re Holmes, 142 Fed. 391, 73 C. C. A. 491.

The present appeal, however, would have been proper under any interpretation of section 24 of the bankruptcy act. This proceeding was instituted by the trustee to have certain adverse claims and liens upon property belonging to the estate declared void and for a sale of the property free and clear of the same. It involves every attribute of a familiar suit in equity. It can be distinguished from such suit only by the fact that it was instituted by petition instead of bill, and the adverse parties were brought before the court by citation instead of subpœna. There are some cases which suggest that if such a proceeding is instituted by a petition, filed by the adverse claimant for the enforcement of his right, and the trustee is cited to answer such a petition, this constitutes "a controversy in a bankruptcy proceeding," which may be reviewed by appeal; but if the parties be reversed, and the trustee files a petition charging that the adverse claim or lien is void, and asking that the property be sold free and clear of it, and the adverse claimant is cited in to answer such a petition, this constitutes not a "controversy," but a "proceeding in bankruptcy proper," and can be reviewed as to matters of law only under section 24b. Morgan v. First National Bank, 145 Fed. 466, 76 C. C. A. 236; In re McMahon, 147 Fed. 684, 689, 77 C. C. A. 668. In our judgment such a distinction is wholly untenable. If enforced, it would deny to parties having adverse liens or claims upon property belonging to the estate the right to review the decision of the court of bankruptcy as to any matter of fact. The consequence of such a holding would be serious. Whether

there would be any right of review on questions of fact would depend wholly upon whether the proceeding was instituted by the trustee or by the adverse claimant. In either case the right involved would be the same, and the issue tried would be the same. The only distinction would be that the parties would be reversed upon the record. Surely what constitutes a "controversy," within the meaning of section 24a, must be determined by the nature of the right involved and the issue tried, and not by the accidental circumstance as to which party is actor and which defendant. Sound reason can be given why as to the purely administrative steps in a bankruptcy proceeding the decision of the trial court on questions of fact should be final. In re Friend, 134 Fed. 778, 67 C. C. A. 500. But no sound reason can be given why, in a controversy possessing every attribute of a suit in equity, an aggrieved party should not have the right of review as to questions of fact as well as of law in accordance with the established practice in equity. It ought not to be possible for the trustee to defeat such a right by being first to file a petition. Most of the confusion on this subject has arisen out of a misunderstanding of the decision in First National Bank v. Title & Trust Co., 198 U. S. 280, 25 Sup. Ct. 693, 49 L. Ed. 1051. In that case the trial court found as a fact that at the time the petition in bankruptcy was filed the property in dispute was in the possession, not of the bankrupt, but of an adverse claimant. The Supreme Court held that this finding defeated the jurisdiction of the trial court. The property had been converted into money, and the trial court by its decision ordered the money to be turned back to the parties who were in possession of the property. This is the point at which the decision of the Supreme Court has been misunderstood. It has been generally thought that the trial court, by its judgment disposing of the fund, passed upon the rights of the parties. This, however, was not the case. It would have been its duty to order the fund turned over to the party who had possession of the property, even if the court decided that it had no jurisdiction of the controversy. The Supreme Court places the decision of the trial court upon that ground, for it says, at page 291 of 198 U. S., page 696 of 25 Sup. Ct. (49 L. Ed. 1051):

"The sale in the circumstances did not change the situation. The proceeds stood in place of the property, and the order returning the proceeds was equivalent to an order returning the property. This it was proper to do, whether the court had held that it lacked jurisdiction, or ruled in favor of petitioners on the merits."

As thus interpreted, the decision of the trial court never passed upon the merits of the controversy. The whole case as construed by the Supreme Court involved solely a question of jurisdiction. If that was its character, it presented simply a question of law which might be fully reviewed by petition. The Supreme Court has itself thus interpreted its decision in First National Bank v. Title & Trust Company in the recent case of Coder v. Arts, 213 U. S. 223, 29 Sup. Ct. 436, 53 L. Ed. 772. Speaking of its former decision, the court there says:

"In that case there was an attempt on the part of the trustee to invoke an adjudication as to the title to property which the District Court found not to be in the possession of the trustee, notwithstanding the petition of the

trustee had averred possession, and it was held that when this fact appeared the District Court had no longer jurisdiction of the case, under the doctrine laid down in Bardes v. Bank, 178 U. S. 524, 20 Sup. Ct. 1000, 44 L. Ed. 1175, and ought to have dismissed the case."

It is manifest that the Supreme Court, if the judgment in First National Bank v. Title & Trust Company had properly involved a decision as to the merits, would have decided that appeal was the proper method of bringing the question before the appellate court, for it sustained an appeal on a petition by a trustee to determine the rights of adverse claimants to property in the custody of the court in a later case reported in the same volume, namely, Whitney v. Wenman, 198 U. S. 539, 25 Sup. Ct. 778, 49 L. Ed. 1157.

We are of the opinion, therefore, that the case is properly before us on the appeal.

The objection of the appellant that the trial court was without jurisdiction of the property, because it was not situated in the district of Kansas, has no merit. Upon the filing of a petition in bankruptcy, all property held by or for the bankrupt is brought within the custody of the court of bankruptcy, and, upon adjudication, that court is vested with jurisdiction to determine all liens and interests affecting it. This jurisdiction is coextensive with the United States. In re Wood & Henderson, 210 U. S. 246, 28 Sup. Ct. 621, 52 L. Ed. 1046; In re Granite City Bank, 137 Fed. 818, 70 C. C. A. 316; In re Muncie Pulp Co., 151 Fed. 732, 81 C. C. A. 116; Guardian Trust Co. v. Kansas City Southern Railway Co., 96 C. C. A. 285, 171 Fed. 43; Dempster v. Waters-Pierce Oil Co., 97 C. C. A. 51, 172 Fed. 353.

This brings us to the merits of the case. At all the times mentioned in the record, Mr. and Mrs. Thomas were citizens and residents of the state of Kansas, by whose laws the wife's right of dower has been abrogated. By the laws of Missouri, where the lands are located, the wife is granted a right of dower in all real property owned by the husband during coverture. Section 8 of the bankruptcy act is as follows:

"The death or insanity of a bankrupt shall not abate the proceedings, but the same shall be conducted and concluded in the same manner, so far as possible, as though he had not died or become insane: Provided, that in case of death, the widow and children shall be entitled to all rights of dower and allowance fixed by the laws of the state of the bankrupt's residence."

It is contended by appellee, and was held by the trial court, that under the proviso of this section the dower rights of the wife, in case of the bankruptcy of her husband, are restricted to those allowed by the laws of the state of the bankrupt's residence. Upon this interpretation of the statute, it was decided that Mrs. Thomas was not entitled to any dower interest in property situated in Missouri, although the laws of that state granted her such rights. We do not think this a sound view of the law of dower, or of section 8 of the bankruptcy act.

1. It is first urged in support of the decision that, if the laws of the several states on the subject of dower are made applicable to the estates of bankrupts, it will cause the bankruptcy act not to be uniform. That, in our opinion, is a mistaken view of the provision of the federal Constitution relating to bankruptcy. The uniformity

which it requires relates to the law itself, and not to its results upon the varying rights of debtor and creditor under the laws of the several states. The Constitution requires acts of bankruptcy to be "uniform throughout the United States." That requirement had its origin in the fear, which was at all times a controlling motive in the convention that framed the federal Constitution, that the powers which it conferred would be exercised by the party in control of the national government to oppress that section of the country which for the time being was opposed to such party. It belongs to the same class as the provision which requires revenue laws to be uniform. As Judge Love says in the case of Darling v. Berry (C. C.) 13 Fed. 659, 667:

"When a bankrupt, revenue, or naturalization law is made by its terms applicable alike to all the states of the Union, without distinction or discrimination, it cannot be successfully questioned on the ground that it is not uniform, in the sense of the Constitution, merely because its operation or working may be wholly different in one state from another. The circumstances and conditions existing in the states of this Union are infinitely various. No law which human ingenuity could possibly frame would be uniform in the sense of operating equally or alike in the various states, with their different conditions and diversified interests. The Constitution provides that 'all duties, imposts and excises shall be uniform throughout the United States.' Now, suppose one or more states should succeed in suppressing utterly the manufacture and sale of ardent spirits and malt liquors, then a federal tax upon these commodities would be entirely inoperative in such states. In such case millions might be collected under an excise law in Illinois, and not a cent in Iowa. The operation of such a law would then be anything but uniform in the two states; but would any court for that reason declare a general law imposing a tax of the kind unconstitutional? Again, a tariff law might be anything but uniform in its operation upon different states. It might foster the industry of a manufacturing state, and oppress that of a strictly agricultural state. But could it on this account be said to be not a uniform law within the meaning of the Constitution, and therefore void? * * * All that the Constitution intends is that Congress shall not pass partial revenue and bankrupt laws. It shall not prescribe one law for this state or section, and a different law for that state or section. The law must be general and uniform in its provisions, but its working and operation may be very different in different states, owing to their diverse conditions and circumstances. Congress can prescribe a uniform law, but it cannot create uniform conditions and circumstances in the various states of the Union."

Nothing can be added to the clearness and force of this language. In our dual form of government, when Congress legislates upon the subject of bankruptcy, it applies the system which it ordains to the rights of both debtor and creditor, as defined by the laws of the states. It could not make the results of a law of bankruptcy uniform, without establishing a comprehensive code embracing the entire subject-matter of civil law. It is manifest, therefore, that the requirement that a statute of bankruptcy shall be uniform has no bearing on the right of dower. That is a matter exclusively for state definition. See, also, Hanover National Bank v. Moyses, 186 U. S. 181, 190, 22 Sup. Ct. 857, 46 L. Ed. 1113.

2. It is next urged that the right of dower belongs in the same class as the right of exemptions and homesteads, which are confined by section 6 of the bankruptcy act to the state of the bankrupt's domicile. Their similitude is very slight. Both are in a general way for the protection of the family. There, however, their likeness ceases. The

homestead and exemptions are a part of the bankrupt's estate. They are both primarily to be claimed by him and set off to him. Their selection from his estate arises at the time when that estate is to be appropriated to the payment of the claims of his creditors. Dower, on the other hand, is no part of the bankrupt's estate. The wife derives no right from him either by grant or contract. As the Supreme Court says in Randall v. Krieger, 23 Wall. 137, 148, 23 L. Ed. 124: "It is wholly given by law." Congress has plenary power over the subject of exemptions, because they are part of the bankrupt's estate. It may, as in the present law, adopt the exemption laws of the several states, or it may, as in the act of 1867 (Act March 2, 1867, c. 176, 14 Stat. 517), adopt local laws in part, and supplement these with a schedule of its own. Its power to deal with the subject, however, arises out of the fact that exemptions are a part of the bankrupt's estate. This consideration shows that the right of dower does not belong in the same class. Again, the right of dower has nothing to do with the insolvency of the husband. It arises from time to time during the marriage relation as the husband acquires real property. If the wife has not released her right of dower, it is as much her own private, absolute property as if she had acquired it by purchase. That estate can no more be transferred to her husband's creditors than any other portion of her separate estate. At the present time in the United States, the wife, as to her property rights, is a third person, and her estate is no more affected by the insolvency of her husband than is the property of other third parties. In our judgment it would be beyond the constitutional power of Congress to provide that in case of bankruptcy the dower rights of the bankrupt's wife, as defined by the laws of the several states, ceased, and the real property owned by him passed to his trustee in bankruptcy discharged from such right of dower. Bankruptcy can only deal with what in law belongs to the bankrupt. It may annul his acts and the acts of his creditors which interfere with the just enforcement of its provisions. It cannot, however, annul an act of the Legislature of a state which previous to the statute of bankruptcy had vested an estate in the wife of the bankrupt. Its whole field of operation is circumscribed to getting in the estate which under the law belongs to the bankrupt, and distributing the same to his creditors. It cannot reach out and take property which under the law belongs to the wife, and apply it to the payment of the bankrupt's debts, any more than it could seize that portion of her property which she acquired by purchase or devise. Again, it does not follow that because the right of homestead and exemptions is confined in most of the states to the domicile of the claimant, such a restriction would be appropriate in regard to dower. Dower is not measured in value or quantity as homesteads or exemptions are. The amount of it is dependent solely upon the amount of real property of which the husband is seized. The debtor could not be allowed homesteads and exemptions under the laws of different states without securing a double allowance. The right must be restricted to the laws of some particular state, and the most natural restriction is the state of the claimant's domicile. Such considerations, however, do not apply to dower. Granting the

right in real property situated in different states does not duplicate the right. As already mentioned, it is measured by the extent of the husband's ownership of property, and the location of such property is material only as the right of dower is governed by the law of the state in which the land is situated.

We are unable to see how the decision in Re Stevens, Fed. Cas. No. 13,392, throws any light on the present case. There the bankrupt had filed a petition in bankruptcy in the Eastern district of Wisconsin. A part of his estate, consisting of a span of horses, harness, and wagon, while temporarily across the state line in Illinois, had been seized on a warrant of attachment. The filing of the petition in bankruptcy had the effect to dissolve this attachment; but the creditors petitioned the court of bankruptcy to allow the action in Illinois to proceed, assigning as a reason that under the exemption laws of Wisconsin the property in question would be exempt, while under the laws of Illinois it would not be. The court very properly held that the bankrupt's right of exemption must be determined by the state of his domicile; that the creditors could not invoke the laws of Illinois, because they granted less exemptions, any more than the bankrupt could have invoked them if they had granted larger exemptions than Wisconsin.

3. Some point is made of the fact that under the laws of Kansas the family secured a liberal homestead and exemptions. That has nothing to do, however, with the right of dower. The right of homestead and exemptions has existed in all of the states granting the right of dower, and in many of them these allowances are quite as liberal as they are in the state of Kansas.

4. That Mrs. Thomas has an inchoate right of dower in the property in question under the laws of Missouri is not controverted. Such a right is expressly secured to her by sections 2933 and 2946 of the Revised Statutes of 1899 of that state (Ann. St. 1906, pp. 1690, 1698), and continues until released by her deed in the manner therein specified. These statutes have been looked upon with favor by the highest court of that state, and so construed to carry out their manifest purpose. Grady v. McCorkle, 57 Mo. 172, 17 Am. Rep. 676; Ellis v. Kyger, 90 Mo. 606, 3 S. W. 23; Davis v. Green, 102 Mo. 170, 14 S. W. 876, 11 L. R. A. 90; Hall v. Smith, 103 Mo. 289, 15 S. W. 621; Blevins v. Smith, 104 Mo. 583, 16 S. W. 213, 13 L. R. A. 441; Long v. Kansas City Stockyards Co., 107 Mo. 298, 17 S. W. 656, 28 Am. St. Rep. 413. The right of dower in real property is determined by the laws of the state in which the property is situated. Story on Conflict of Laws, §§ 424, 428, 445; Kerr v. Moon, 9 Wheat. 565, 6 L. Ed. 161; Wilson v. Cox, 49 Miss. 538; Apperson v. Bolton, 29 Ark. 418; Washburn v. Van Steenwyk, 32 Minn. 336, 20 N. W. 324; Jones v. Gerock, 59 N. C. 190; Jennings v. Jennings, 21 Ohio St. 56; Atkinson v. Staigg, 13 R. I. 725. The highest court of Missouri, from an early date, has construed the statutes of that state as securing the right of dower in real property within the state to nonresidents, the same as to residents. Stokes v. O'Fallon, 2 Mo. 32. Suppose a bankrupt residing in Missouri should die seised of real property in Kansas; would his widow, under the proviso of section 8 of the bankruptcy act, be

entitled to dower in that property? Plainly not, because the law of Kansas does not grant dower. No more should she, when the situation is reversed, lose her right of dower as to real property situated in Missouri. That right is fixed by the laws of the state in which the property is situated.

It is said by appellee that the right of dower is "a mere intangible, inchoate, contingent expectancy, and not an estate in lands, and does not rise to the dignity of a vested right." That is quite true. But this has been the quality of the right at all times, at common law and under statute. It is precisely such a right that is secured by the statute of Missouri, and it would be, in our judgment, a perversion of judicial power to make of the inherent qualities of the right a reason for destroying or impairing it.

It must be conceded, therefore, that the right exists, unless it has been taken away by the bankruptcy act. To determine whether that has happened, we ought to look first at the general scheme of that statute. The most conspicuous feature of the present bankruptcy act is a clear purpose to save to the bankrupt and his family every right possessed by them under the laws of the several states, and to grant to creditors no property or right which would not have been theirs if the bankruptcy act had not been passed. The courts have repeatedly referred to this as a feature distinguishing the present act from all previous statutes on the subject. It makes the law of the several states the measure of the rights to be protected and enforced, both as to the bankrupt and his creditors. In defining what shall pass to the trustee for the benefit of creditors, it designates "property which prior to the filing of the petition the bankrupt could by any means have transferred, or which might have been levied upon and sold under judicial process against him." By the express provisions of the statute of Missouri, the wife's right of dower does not fall within this language. It being no part of the property which the trustee is to administer, it is difficult to understand how the right of dower can be affected by the bankruptcy act; and yet the whole purpose of the order now under review is to appropriate to the bankrupt's creditors the widow's right of dower, by selling the property freed from that right. But, again, the present bankruptcy act also approaches this subject negatively. It points out in section 67 all liens, transfers, and estates which are to be invalidated by the bankrupt act. If it had been the intent of the framers of the statute either to restrict or abolish the right of dower, we should have found the provision designed to accomplish that purpose in this section. It is not there. On the contrary, a most scrupulous care is evinced throughout the section to save all rights and liens obtained in good faith from the bankrupt. If rights resting wholly upon private negotiation are safe, can any reason be assigned why a right created by statute in furtherance of the public policy of a state should not also be secure?

In the light of these general considerations, let us approach section 8 of the bankruptcy act, which, according to appellee, destroys Mrs. Thomas' right of dower. In our judgment that right is safe upon either of four grounds:

(a) The principal clause of section 8 deals with the contingency of the death of the bankrupt during the pendency of the proceedings in bankruptcy. By a cardinal rule of interpretation, a proviso does not extend beyond the scope of the principal clause of the statute. The entire language and purpose of the section clearly indicates to our minds that this rule of interpretation should be applied in ascertaining its meaning. It relates only to estates in which the bankrupt dies during the pendency of the proceeding. This is not only the general subject-matter of the section, but is also clearly pointed out in the proviso itself as the contingency intended to be covered by it. "In case of death," are the first words of the proviso, and these words qualify all its other provisions. Such being the scope of the section, the estate here involved can be in no way affected by it, for the bankrupt is still alive.

(b) It was manifestly the belief of Congress that, in the absence of section 8, the bankruptcy proceeding would abate in case of the bankrupt's death. The property of the estate would in that event pass to the personal representatives of the bankrupt, to be administered according to local laws. In such a contingency, the widow's right of dower in real property, and the allowances to the family out of the personal estate, would be complete, would become immediately vested, and would take priority over the rights of creditors. Section 8 prevents the proceeding in bankruptcy from abating; but, by the proviso, Congress intended to save to the widow and children all that they would have obtained in case of its abatement. It cannot be denied that, if the present bankruptcy proceeding were to abate, Mrs. Thomas' right of dower in real property in Missouri would be complete.

(c) The proviso may be interpreted as having been used simply out of an abundance of caution. If that be its effect, it leaves all rights precisely as they would have been if the proviso had been omitted. It neither enlarges nor restricts those rights, but simply saves them. That is the interpretation which was put upon the language by the majority of this court in the case of In re McKenzie, 142 Fed. 383, 73 C. C. A. 483. If we adopt that interpretation, it leaves the right of dower just as it stood under the laws of the several states. The fact that the proviso is restricted by the clause "fixed by the laws of the state of the bankrupt's residence" would be immaterial. The entire proviso being used only out of an abundance of caution, the fact that its language is not as comprehensive as the right to which it refers would not restrict the right, because the intended effect of the proviso is simply to preserve rights as already existing. To say that the proviso was used for the purpose of removing a possible doubt as to whether existing rights were not to be affected by section 8, and yet hold that, because its language is narrow, the rights to which it refers are narrowed, is to deny in the conclusion what is assumed in the premise, namely, that the proviso is used out of an abundance of caution, and not for the purpose of affecting existing rights. It was expressly decided in Porter v. Lazear, 109 U. S. 84, 3 Sup. Ct. 58, 27 L. Ed. 865, that the omission from a bankruptcy act of any provision saving the right of dower "does not enlarge the effect of the assign-

ment, or of the sale in bankruptcy, so as to include lawful rights which belong, not to the husband, but to his wife." It was further decided that the proviso in the act of 1841, saving the right of dower, was "a mere declaration, inserted for greater caution." See, also, Hanover National Bank v. Moyses, 186 U. S. 181, 190, 22 Sup. Ct. 857, 46 L. Ed. 1113. If we adopt the interpretation of section 8 here outlined, there is no room for a contention that Mrs. Thomas' right of dower does not exist as defined by the laws of Missouri.

(d) At the time the bankruptcy act was passed, there were nine states of the Union, namely, Connecticut, Georgia, Mississippi, North Carolina, Tennessee, Vermont, New Hampshire, Delaware, and Florida, in which the right of dower applied, not to real property of which the husband was seised during the coverture, but only to such real property as he was seised of at the time of his death. There were also in force in many states statutes giving to the wife a right in the nature of dower in all personal property owned by the husband at the time of his death. In all of these states, if a bankrupt husband died while his proceedings were pending, it might very well have been contended that the wife's right of dower in his estate did not exist, because the legal title and possession of his property would have passed to his trustee. It was the view of Judge Adams in the McKenzie Case that the proviso of section 8 was intended to prevent such a result. That interpretation receives strong support from the foregoing facts. We recognize, of course, that Congress could not, in the bankruptcy act, enlarge the right of dower as defined by the laws of the several states; and if the right as thus defined was restricted to property of which the husband was possessed at the time of his death, Congress could not give the right to property not so situated. But, on the other hand, the bankrupt is dispossessed of his property by virtue of the bankruptcy act, and it was competent for Congress to define and restrict the force and effect of that act. The trustee in bankruptcy holds for the benefit of the bankrupt, as well as his creditors, and it was competent for Congress to declare that the title passing to him under its act should not impair the right of dower as granted by the laws of the several states. This would be in harmony with the general scheme of the act to give to the creditors only that which would have belonged to them if the bankruptcy act had not been passed, and to save to the bankrupt and his family everything that would have belonged to them as against the creditors in the absence of the bankruptcy act. If this be the correct interpretation of the proviso, Mrs. Thomas' right of dower is safe upon two grounds: (1) The entire purpose of the proviso being to preserve the right as defined by the laws of the several states, that purpose should control, and the last clause should not be seized upon to defeat it. (2) The proviso was intended to apply only to those states in which the right of dower is restricted to property of which the husband is seised at the time of death. Missouri is not in that class, as the widow's right of dower there extends to all property owned by the husband during the coverture. Therefore the proviso, under the view of its meaning which we are now considering, could have no effect upon real property in that state.

The proviso deals with two classes of rights: First, the widow's right of dower in real property; second, the allowances to the family out of the personal estate. This second class of rights is necessarily fixed by the laws of the state of the bankrupt's residence, for general rights in personal property follow the person of the owner and are determined by the laws of the state of his residence. The framer of the proviso used, in its last clause, language which was entirely appropriate to the allowances, and in part appropriate as to the right of dower. Having in mind several classes of rights, he made the not uncommon mistake of using language which was not quite comprehensive enough to cover all those rights under all conditions. If the proviso was a grant of rights, there would be reason in restricting the rights to its language; but, being intended to protect existing rights, it ought not to be given an interpretation which would destroy any part of those rights.

Real property is now, especially in the West, almost as much an article of trade as personal property. For this reason the right of dower, which used to be favored, has of late become odious. Courts, however, cannot allow the odiousness of the right to lead them to adopt a strained construction of a statute, for the purpose of abating what may possibly be regarded as a commercial nuisance. These are considerations for the Legislature alone.

The case was disposed of in the trial court upon cross-bill and answer, without the introduction of evidence. The only questions raised were questions of law. It must have been held that the wife of a resident of Kansas was not entitled to an estate of dower in real property situated in Missouri. We think that construction was wrong. But, if the interpretation which we have indicated should be accepted, it would not follow that Mrs. Thomas would be entitled to an estate of dower in the property here involved. If the averments of the original petition are true, Mr. Thomas held the property in trust for the corporation, and in that case his wife would not be entitled to dower rights therein.

The decree should be reversed, and the trial court directed to proceed in accordance with the views expressed in this opinion. It is so ordered.

RINER, District Judge, dissents.

(173 Fed. 597.)

In re BOTHE.

(Circuit Court of Appeals, Eighth Circuit. October 11, 1909.)

No. 95.

1. CHATTEL MORTGAGES (§ 47*)—VALIDITY—DESCRIPTION OF PROPERTY.

A chattel mortgage on property described only as "five wagons," when the mortgagor owned more than five wagons, is void for insufficiency of description.

[Ed. Note.—For other cases, see Chattel Mortgages, Cent. Dig. § 100; Dec. Dig. § 47.*]

2. BANKRUPTCY (§ 278*)—RIGHTS OF TRUSTEE—ENFORCEMENT OF EQUITIES OF SPECIAL CREDITORS.

A trustee in bankruptcy represents all persons interested in the estate, and may enforce in the court of bankruptcy equitable rights existing in favor of certain of the creditors only.

[Ed. Note.—For other cases, see Bankruptcy, Cent. Dig. § 418; Dec. Dig. § 278.*]

3. CHATTEL MORTGAGES (§ 197*)—MISSOURI STATUTE—EFFECT OF FAILURE TO RECORD.

Under Rev. St. Mo. 1899, § 3404 (Ann. St. 1906, p. 1936), which provides that a chattel mortgage shall be void against any other person than the parties thereto unless possession of the property is taken by the mortgagee or the mortgage is recorded, as construed by the appellate courts of the state, creditors of a mortgagor who became such after the mortgage was given, but before it was recorded, have equities superior to those of the mortgagee, and the mortgage remains void as to them, although subsequently recorded, and although they have acquired no title to or lien upon the property.

[Ed. Note.—For other cases, see Chattel Mortgages, Cent. Dig. §§ 429–433; Dec. Dig. § 197.*]

Petition to Revise Decree of the District Court of the United States for the Eastern Division of the Eastern District of Missouri, in Bankruptcy.

In the matter of Lawrence Martin, bankrupt. On petition by George Bothe to revise an order holding a chattel mortgage invalid as to certain creditors. Petition dismissed.

On June 2, 1906, Lawrence Martin executed and delivered to George Bothe a chattel mortgage, conveying to him certain personal property, including five wagons, to secure him against liability on an indorsement then made for Martin's accommodation. The mortgaged property remained in the possession of the mortgagor, and the mortgage itself was not recorded, until June 4, 1907. Between the execution of the mortgage and its recording Martin became indebted to several persons for merchandise purchased of them, and subsequently on January 25, 1908, filed a petition upon which he was adjudicated a bankrupt. On February 5, 1908, Bothe filed a petition with the referee praying for the possession of the mortgaged property, claiming title thereto by virtue of his mortgage. Pending a hearing and determination of this petition, the court ordered a sale of the mortgaged chattels free of liens. This sale was made, and the proceeds were held subject to the same liens and preferential rights as the property itself had been. The mortgagee claimed them by virtue of his mortgage, and the referee and the court below decided that the mortgage was absolutely void in so far as it attempted to convey the five wagons, and as to creditors of the bankrupt who extended credit to the bankrupt after the execution of the mortgage, and before it was recorded, that it was also invalid in respect of all the property attempted to be conveyed. This is a petition by the mortgagee for review, challenging that decision.

Charles H. Franck (A. M. Frumberg, on the brief), for petitioner.

L. L. Leonard, for respondent.

Before HOOK and ADAMS, Circuit Judges, and CARLAND, District Judge.

ADAMS, Circuit Judge (after stating the facts as above). The court below was clearly right in holding the mortgage inoperative and void as to the five wagons. It appears without contradiction that

Martin had six wagons of various kinds at the time he executed the mortgage. The only description of those conveyed was "five wagons." There was no segregation of any particular five wagons from the larger number owned by Martin, and no means were disclosed, in the mortgage or otherwise, for determining which of them were intended to be conveyed. For want, therefore, of a sufficient description to identify the property intended to be conveyed, the mortgage was void as to the wagons.

The mortgage was recorded more than four months prior to the adjudication in bankruptcy, and therefore, so far as the bankruptcy act was concerned, it created a valid preferential right over all other creditors of the bankrupt. But by the law of Missouri (section 3404, Rev. St. 1899 [Ann. St. 1906, p. 1936]), where the mortgage was made, it became and was invalid against any other person than the parties thereto until it was recorded. No question of lawful or unlawful preference within the contemplation of the bankruptcy act is now presented. The sole inquiry is whether the property in question, prior to the bankruptcy proceedings, belonged to the mortgagee or to the creditors of the bankrupt who extended credit to him, after the execution of the mortgage and before it was recorded. No other creditors assert any claim to it.

The trustee in bankruptcy stands for and represents all persons interested in the estate of the bankrupt. In this case, doubtless moved so to do by the interested creditors, he seeks to assert an equitable right in favor of certain special creditors to a part of the bankrupt's estate as against the holder of a chattel mortgage purporting to convey it to one creditor. The rights of these special creditors rest on the principle of estoppel, and are no less enforceable in the bankruptcy court than they would be if they had their origin in written contract. Equitable rights, no less than legal, are there enforced. Atchison, Topeka & S. F. Ry. Co. v. Hurley, 153 Fed. 503, 82 C. C. A. 453, s. c. 213 U. S. 126, 29 Sup. Ct. 466, 53 L. Ed. 729. The mortgagee, Bothe, by leaving the property in the possession of the bankrupt and withholding the mortgage from the record, invited others to deal with the bankrupt on the assumption of his ownership of an unincumbered title to the property conveyed. Whether those so dealing with him were actually deceived or not is immaterial. The inevitable tendency was to mislead and deceive, and the presumption must be indulged that they were misled to their injury. Landis v. McDonald, 88 Mo. App. 335; Harrison & Calhoun v. South Carthage Min. Co., 95 Mo. App. 80, 68 S. W. 963, and cases cited.

As between the mortgagee and those dealing with and extending credit to the mortgagor subsequent to the date of the mortgage and prior to the recording of it, there is an obvious equity in favor of the latter. It was doubtless in recognition of this equity that the provisions of section 3404 were enacted into positive law. That section has been the subject of much consideration by the appellate courts of Missouri; and this court, in the recent cases of First Nat. Bank of Buchanan County v. Connett, 142 Fed. 33, 37, 73 C. C. A. 219, 5 L. R. A. (N. S.) 148, and McElvain v. Hardesty (C. C. A.) 169 Fed. 31,[1] considered the

[1] 94 C. C. A. 399.

Missouri cases and undertook to follow the interpretation placed upon the statute by them. In the former, speaking by Judge Hook, we said:

"The Missouri statute provides that no mortgage of personal property shall be valid against any other person than the parties thereto, unless possession of the mortgaged property be delivered to and retained by the mortgagee, or unless the mortgage be recorded in the county in which the mortgagor resides. The sweeping character of its provisions at once attracts attention. Under this statute it has been held that where possession is not taken an unrecorded chattel mortgage is fraudulent and void in law as to every one, excepting trespassers, parties to the instrument, and general creditors whose demands arose prior to the time it was given; nor as to such prior creditors is it valid if by proceedings in court or otherwise they have secured a lien upon the property before it is recorded. Such a mortgage is also utterly void as to simple contract creditors who extended credit after it was given, and who have secured no title or lien by purchase, execution, attachment, or otherwise. As to them the subsequent recording of the instrument is of no effect. It cannot be asserted against the enforcement of their demands."

We perceive no reason for departing from this deliberate declaration, and we accordingly adhere to the conclusion there expressed.

Detached expressions are found in Harrison & Calhoun v. South Carthage Min. Co. and Landis v. McDonald, supra, to the effect that, if "a prior creditor" fails to obtain some specific lien by attachment, execution, or otherwise on the mortgaged property before the mortgage is actually recorded, the mortgage is by the act of recording validated as to such creditor, and his right is subordinated to the rights of the mortgagee; and counsel for the mortgagee seize on expressions of this kind and claim that, because the special creditors in this case failed to take steps to fix a lien upon the mortgaged property before the mortgage was recorded, their rights were lost. We cannot give our assent to this claim. Until the mortgage was recorded it was absolutely void as to these special creditors. Their superior rights arose against the property of their debtor while the mortgage was thus void, and to hold that such rights were lost before they had an opportunity to assert them, before they even knew of the existence of the mortgage, is a palpable absurdity. We find nothing in the cases referred to to justify any such contention. The words "prior creditors," there referred to, clearly relate to creditors whose claims antedated the execution of the mortgage. This is apparent, not only from the opinions taken as a whole, but from other cases there cited and relied on. Such creditors, who parted with nothing on the faith of their debtor's ostensible ownership of unincumbered property, are required to take some step to fix a lien upon the mortgaged property prior to the recording of the mortgage in order to secure an equitable standing. Until then they have no equitable right or claim enforceable in a court of equity. On the contrary, creditors who extend credit to the mortgagor after the execution of the mortgage and before it is recorded have, as already seen, a clear equitable right, inhering in the transaction itself, superior to the mortgagee, and this right entitles them to relief without the necessity of fixing a lien as a prerequisite. This distinction, we think, is clearly recognized in the Missouri cases relied upon by counsel and was distinctly recognized and applied by us in First Nat. Bank of Buchanan County v. Connett, where we said:

"Such a mortgage is also utterly void as to simple contract creditors who extended credit after it was given, and who have secured no title or lien by purchase, execution, attachment, or otherwise. As to them the subsequent recording of the instrument is of no effect. It cannot be asserted against the enforcement of their demands."

The trial court held that the proceeds of the property sold should be distributed ratably between the creditors whose claims accrued after the execution of the mortgage and before it was recorded, and also held that the claim of the mortgagee in this case had the same equitable standing as the other claimants, and should participate ratably with them in the distribution of the proceeds of the property. The trustee does not challenge that feature of the order, and hence it needs no consideration.

We think the mortgagee was accorded all the rights he had; and, finding no error in the proceedings in the trial court, this petition for review is dismissed.

(173 Fed. 601.)

ARKANSAS VALLEY SUGAR BEET & IRRIGATED LAND CO. v. FT. LYON CANAL CO.

(Circuit Court of Appeals, Eighth Circuit. October 11, 1909.)

No. 2,852.

1. STIPULATIONS (§ 14*)—RULES OF CONSTRUCTION.

A stipulation to settle controversies or to assist a court in deciding them ought not to be discouraged by a narrow and unreasonable construction that would defeat the manifest intention of one of the parties, acceded to by the other.

[Ed. Note.—For other cases, see Stipulations, Cent. Dig. §§ 24–37; Dec. Dig. § 14.*]

2. CORPORATIONS (§ 506*)—RIGHTS OF STOCKHOLDERS—WHEN NECESSARY PARTIES TO SUIT.

Under Rev. St. Colo. 1908, § 865, which provides that each stockholder of a corporation shall have the right to nominate directors to be voted for, and to vote the number of shares held by him for as many directors as are to be chosen, or to cumulate the same upon one or more candidates, and that directors shall not be elected in any other way, the right to elect directors is a right of the stockholders as such, as distinguished from the corporation, and the validity of a contract made by the corporation, giving another corporation the right to select a certain number of its directors, should not be determined in a suit to which the stockholders are not parties, otherwise than as represented by the corporation.

[Ed. Note.—For other cases, see Corporations, Dec. Dig. § 506.*]

Appeal from the Circuit Court of the United States for the District of Colorado.

Suit in equity by the Ft. Lyon Canal Company against the Arkansas Valley Sugar Beet & Irrigated Land Company. From a decree for complainant, defendant appeals. Modified and affirmed.

Platt Rogers (John F. Shafroth and Frank E. Gregg, on the brief), for appellant.

Robert S. Gast (Alva B. Adams and H. L. Lubers, on the brief), for appellee.

Before HOOK and ADAMS, Circuit Judges, and PHILIPS, District Judge.

HOOK, Circuit Judge. This was a suit by the Ft. Lyon Canal Company to compel the Arkansas Valley Sugar Beet & Irrigated Land Company to comply with a contract by delivering to complainant annually from a reservoir a certain quantity of water for use in its irrigating system. According to a stipulation of the parties, made after the issues were joined, a decree was entered giving complainant what it desired and retaining jurisdiction of the cause for the determination of a defense set up in the answer. Upon further hearing a decree went against defendant as to the matter deferred, and it prosecuted this appeal.

The complainant was incorporated in 1897, under the laws of Colorado, for the purpose of owning and operating what was formerly known as the "La Junta & Lamar Canal System" and the distribution of water for the irrigation of lands lying under its ditches. The canal and appurtenant properties had been involved in litigation, and were in charge of a receiver appointed by the district court of Prowers county, Colo. The new company, the complainant, was organized with the approval of that court. Its shareholders were the owners of the water rights that had been granted, and it received possession of the canal system from the receiver at the court's direction. The canal extended from the headgate on the north bank of the Arkansas river for more than 100 miles through the counties of Otero, Bent, and Prowers, in the state of Colorado. On December 19, 1896, the Great Plains Water Storage Company was organized to develop certain reservoir sites for the storage of water to be used in another canal system in Bent and Prowers counties, and it was found advisable to use part of complainant's property. So, on October 29, 1897, a contract was entered into whereby the Storage Company secured the perpetual use jointly with complainant of that part of the latter's canal extending from the headgate at the river a distance of about 40 miles, in consideration of which the Storage Company enlarged and improved the same at a great expense. The contract also provided that in a certain contingency, which afterwards came to pass, the Storage Company should enlarge and complete for service a reservoir belonging to complainant and thereafter they should use it jointly, the complainant to have therefrom for its own use a fixed proportion of the water stored there. This contract, with some exceptions not material here, was in the same terms as a prior contract between the Storage Company and the receiver, who executed it upon the order of the state court. The defendant company, appellant here, is a New Jersey corporation, and is the successor in interest of the Storage Company.

It was set forth in the bill that, although the 40 miles of complainant's canal had been improved and defendant was enjoying the use of it, neither the defendant nor its predecessor, the Storage Company, had developed the reservoir, but, on the contrary, had diverted the waters which should have gone there into a reservoir of their own, and complainant was denied all use and benefit thereof. It was alleged that the development of its reservoir as agreed upon was essential to

complainant's business and was the principal consideration for the contract. The first decree of the trial court pursuant to the stipulation satisfied complainant in this particular by giving it an equal quantity of water from one of defendant's reservoirs. The matter left open for future determination was a defense based upon a provision of the contract that the part of the canal in question when enlarged, and the reservoir when developed and in use, should be in the joint control and management of the contracting parties, and for that purpose the Storage Company should have the right to designate two owners of rights to water under complainant who should be elected annually as two of the five members of complainant's board of directors. For two or three years no controversy arose over this provision, but finally a majority of complainant's shareholders refused to vote for the nominees of the Storage Company. Defendant urged this as a defense to complainant's demand for specific performance of the other provisions of the contract. As already observed, the decree of the trial court upon this matter was against the defendant, and its counsel say the question on this appeal is:

"Should the Ft. Lyon Canal Company and its stockholders elect as directors of said company two of the stockholders of said company designated by the appellant?"

The complainant argues that this question cannot now be entertained, because the first decree gave it the water it was demanding, and therefore fully disposed of the case, since defendant did not assert its grievance by way of cross-bill for affirmative relief. But the defendant in effect contended in its answer that it ought not in equity to be required to do more than it had already done, as long as complainant itself refused to abide by the contract; and we think the purpose of the stipulation was that complainant should have the much-needed water from the reservoir, subject, however, to the ultimate determination of the defense urged by defendant. By the first decree the court retained jurisdiction of the cause, and we have no doubt that, if the remaining question had been finally and rightly decided in defendant's favor, the continuance of complainant's right to water from the reservoir could have been made to depend upon its compliance with the decision. This was the spirit of the stipulation, and the court's procedure in the cause left room for its observance. A stipulation to settle controversies, or to assist a court in deciding them, ought not to be discouraged by a narrow and unreasonable construction, that would defeat the manifest intention of one of the parties, acceded to by the other. Obviously it was the intention here that there should be a decision upon the defense, and that in some appropriate way the decision should be made effective.

It is debatable, however, whether under the terms of the contract the defendant was entitled to demand the election of its nominees as members of complainant's board of directors before it had both enlarged the canal and developed the reservoir. There was default as to the latter when the suit was begun. Again, were it not complicated by the orders of the state court respecting the making of the contract, it would be an interesting question whether the provision relating to

the designation of directors is consistent with public policy. Complainant is not a mere business concern for private profit, but, in a limited sense, is a quasi public corporation, endowed by the Colorado law (Mills' Ann. St. §§ 616, 1716) with the power of eminent domain, and charged with the performance of specific duties. That a part of its governing board should, under mere contract to that effect, be dictated by another corporation, irrespective of any stockholding interest, at once attracts attention. Manifestly the relations between complainant and defendant as the successor of the Storage Company are such as to present points of conflict of interest. Their interests and the welfare of their respective stockholders are at times quite likely to be divergent. The present litigation furnishes an illustration of this, if any were needed. The pleadings show that, especially in times when the water supply is insufficient for the needs of all, acute differences are likely to arise. It is altogether right for corporations to contract for the joint control and management of properties upon which each has expended its funds and in the operation of which they are mutually interested; but it is not usually done by allowing one to dictate the selection of members of the other's board of directors, which under the law (Rev. St. 1908, § 865) has the management of its corporate affairs, its duties to the state and its own stockholders, and its business relations with other corporations. Such a course is quite distinguishable from the pooling by stockholders of their stock for a lawful purpose, or the creation of a voting trust for a limited time, such as have been upheld by some of the courts. The complainant owns and operates property and has many affairs in which the defendant has no interest growing out of the joint maintenance and use of part of the canal and the reservoir, yet the contract purports to give defendant the perpetual right to nominate two of its five directors. The effect in this particular case would be to give defendant, as the successor of the Storage Company, the power to dominate and control the complainant, so far as a board of directors can do so; for the record shows that, aside from the provision in the contract, the defendant was enabled, by a cumulative voting of stock which it controlled, to elect as members of complainant's board of directors two persons whom it had not nominated under the contract.

We think, however, these questions should not be determined in the absence of the stockholders. Minnesota v. Northern Securities Company, 184 U. S. 199, 235, 22 Sup. Ct. 308, 46 L. Ed. 499; Weidenfeld v. Northern Pacific, 129 Fed. 305, 63 C. C. A. 537. The statute of Colorado (Laws 1895, p. 150, c. 66; Rev. St. 1908, § 865) provides that each stockholder shall have the right to nominate directors to be voted for, and that he shall have the right to vote the number of shares held by him for as many directors as are to be chosen, or may cumulate the same upon one or more candidates. It is also specifically provided that the directors shall not be elected in any other way. Under such a statute the selection of the directors of a corporation belongs to the stockholders as such. It is in a sense an individual right in them, as distinguished from a power of the corporation in its single, aggregate capacity. A corporation is not in every case sufficiently a

representative of its stockholders to enable a court in their absence to pronounce judgment directly affecting their rights and interests. Weidenfeld v. Northern Pacific, supra. The right to vote for directors and the measure of it are specifically prescribed by the law under which complainant was organized, and do not proceed from any act, contract, or by-law of the corporation. In Brewster v. Hartley, 37 Cal. 15, 99 Am. Dec. 237, it was said:

"The exercise of this power having been regulated by the statute, the corporation cannot, by its by-laws, resolutions, or contracts, either give or take it away. Where the statute is silent in this respect, the election of the directors, like the election or appointment of subordinate officers, would be subject to the regulation and control of the corporation; but, the statute having expressly declared who shall be entitled to vote for directors, its provisions are imperative upon the corporation, constituting a part of the law of its being, and the corporation has no authority to extend or limit the right as regulated by the statute."

The clause of the contract before us is in effect a limitation upon the right conferred by the Colorado statute upon the stockholders, and when it is sought to be enforced, and its validity is drawn in question, it would seem that the stockholders themselves should be present otherwise than by the corporation which made the contract. That the stockholders may also have individually contracted respecting the matter does not affect this conclusion. It does not enlarge the representative character of the corporation, nor alter the necessity of the presence of those whose individual rights are to be affected. However, the denial of relief to defendant should be without prejudice to a future proceeding, in which the matter may be appropriately litigated and determined.

As so modified, the decree is affirmed.

(173 Fed. 605.)

COLORADO & S. RY. CO. v. TUCKER.

(Circuit Court of Appeals, Eighth Circuit. October 11, 1909.)

No. 2,762.

RAILROADS (§ 333*)—ACCIDENTS AT CROSSINGS—CONTRIBUTORY NEGLIGENCE—DUTY TO STOP, LOOK, AND LISTEN.

A man who in the daytime walked upon a railroad crossing immediately in the way of an engine, which was backing toward the crossing at a speed of five or six miles an hour, and which was in plain sight as it approached, with nothing to obstruct his view, is as matter of law chargeable with contributory negligence, which precludes recovery for his death so caused.

[Ed. Note.—For other cases, see Railroads, Cent. Dig. §§ 1080–1083; Dec. Dig. § 333.*]

In Error to the Circuit Court of the United States for the District of Wyoming.

Action by Lola D. Tucker, administratrix, against the Colorado & Southern Railway Company. Judgment for plaintiff, and defendant brings error. Reversed.

O. L. Dines (Tyson S. Dines, Elmer E. Whitted, and Charles W. Burdick, on the brief), for plaintiff in error.

William B. Ross, for defendant in error.

Before HOOK and ADAMS, Circuit Judges, and PHILIPS, District Judge.

HOOK, Circuit Judge. John McNamara was run over and killed by an engine of the railway company at a railroad crossing of a street in the city of Cheyenne, Wyo. His administratrix sued the company and recovered judgment. There was a defense of contributory negligence. At the close of the evidence the company moved for a directed verdict, and the denial thereof by the trial court presents the only question we find it necessary to consider.

There were two theories as to the place where deceased got upon the track and what he was doing there; but, as the verdict of the jury was against the company, we shall adopt that of the plaintiff, and also assume there was negligence in failing to give proper signals of the approach of the engine. Two side tracks, and a main line between them, running in a northerly and southerly direction, crossed the city street substantially at right angles. They were a part of the yards of the company. About four minutes before the accident the engine went northward on the west side track to a point 75 or 100 feet north of the street, and after coupling to some cars backed with them towards the crossing. The deceased approached the crossing from the northwest on a cross-lot path, and, though no one saw him step upon the track, it is quite clear that when he did so he was instantly struck by the tender of the engine and run over. No witness testified whether he looked and listened just before stepping on the track, so the presumption of care which arises from the natural instinct of self-preservation is invoked in support of the judgment. But those who saw him as he neared the immediate vicinity of the crossing said he was paying no attention to the engine and cars, and there was nothing whatever to obstruct his view northward along the track for at least a block. The engine and cars were approaching slowly, five or six miles an hour, and were in plain view. It was between 1 and 2 o'clock of a January afternoon, and though the snow upon the ground may have required careful attention in walking, and there was some wind, every witness whose view was not obstructed by fixed physical objects, and who looked, saw the engine and cars at a greater distance than deceased was from them. One witness who saw them plainly was more than 200 feet away. Those who observed the deceased as he neared the crossing noticed no effort on his part to detect the danger. The conclusion is unavoidable that he did not perform his duty before going on the track; for, had he looked, he could not have failed to see, and he was complete master of his movements.

There is no merit in the argument that the engine was a road engine, as distinguished from the type specially designed for switching service, that deceased saw it headed north and moving in that direction, that he had reason to believe it would continue in its course, and that he was therefore lulled into a sense of safety. All the inferences that

might reasonably be drawn from such premises will not, standing alone, excuse a pedestrian from adopting those simple precautions for his safety which experience has shown to be so necessary and which the law has imposed as a duty. We think the case is controlled by the many others of like character decided by this court: Railway Co. v. Cundieff (C. C. A.) 171 Fed. 319;[1] Railway Co. v. Williams (C. C. A.) 170 Fed. 1020;[2] Railroad Co. v. Munger (C. C. A.) 168 Fed. 690;[3] Tramway Co. v. Cobb, 164 Fed. 41, 90 C. C. A. 459; Railway Co. v. Stepp et al., 164 Fed. 785, 90 C. C. A. 431; Springer v. Railway Co., 161 Fed. 801, 88 C. C. A. 619; Railway Co. v. Donovan, 160 Fed. 826, 87 C. C. A. 600; Rich v. Railway Co., 149 Fed. 79, 78 C. C. A. 663; Railway Co. v. Clarkson, 147 Fed. 397, 77 C. C. A. 575; Railroad Co. v. Chapman, 140 Fed. 129, 71 C. C. A. 523; Railway Co. v. Andrews, 130 Fed. 65, 64 C. C. A. 399; Railway Co. v. Hardy, 94 Fed. 294, 37 C. C. A. 359; Garner v. Trumbull, Receiver, 94 Fed. 321, 36 C. C. A. 361; Railway Co. v. Caulfield, 63 Fed. 396, 11 C. C. A. 552; Railroad Co. v. Ives, 63 Fed. 791, 11 C. C. A. 433; Railway Co. v. McArthur, 53 Fed. 464, 3 C. C. A. 594.

The judgment is reversed, and the cause remanded for a new trial.

(173 Fed. 615.)

THE FOLMINA.

(Circuit Court of Appeals, Second Circuit. July 21, 1909.)

No. 281.

COURTS (§ 384*)—FEDERAL COURTS—CIRCUIT COURTS OF APPEALS—DETERMINATION OF CAUSE.

Where facts have been found by the Circuit Court of Appeals and stated to the Supreme Court as a basis for asking its instructions, the court will not, after such instructions have been obtained, re-examine upon the identical evidence already considered controverted questions of fact which have been advisedly determined.

[Ed. Note.—For other cases, see Courts, Cent. Dig. § 1021; Dec. Dig. § 384.*]

Appeal from the District Court of the United States for the Eastern District of New York.

In Admiralty. Action by Gustav A. Jahn and William J. Griffith against the steamship Folmina for damage to cargo. Decree (143 Fed. 636) for claimant, and libelants appeal. Reversed.

This is an appeal from a decree of the District Court, Eastern District of New York, dismissing a libel filed to recover damages for injury sustained by a shipment of rice carried on the steamship Folmina from Kobe, Japan, to New York, in 1901. In May, 1907, this court certified to the Supreme Court two questions or propositions of law, concerning which it desired the instruction of that court for its proper decision of the case, and made the following statement of the facts on which such questions of law arose:

"The steamship Folmina sailed from Kobe, Japan, for New York, with a large shipment of rice on board, in No. 3 hold, under a bill of lading which

---

[1] 96 C. C. A. 211. [2] 95 C. C. A. 670. [3] 94 C. C. A. 176.

exempted the carrier from 'the act of God, * * * loss or damage from * * * explosion, heat, or fire on board, * * * risk of craft or hulk or transshipment, and all and every the dangers and accidents of the seas, rivers, and canals and of navigation of whatever nature or kind.' It further provided that the ship 'is not liable for * * * sweat, rust, decay, vermin, rain spray.' The rice was in good order when put on board, but when discharged in New York a large part of it stowed on the starboard side of the hold was found damaged. The area of injury was downward from the first six tiers of bags to the bottom of the hold, which was dry, forward from about the after end of the hatchway nearly to the bulkhead, and inboard about three or four bags. The damage was caused by water and consequent heat.

"A majority of the court are satisfied that the damage was caused by sea water and that it was not shown that the vessel encountered sufficient stress of weather to warrant the inference that it came in because of the action of external causes. There was no evidence tending to show any negligence, fault, or error on the part of the ship's officers or crew. The cargo was well stowed and ventilated. The Folmina was a steel steamship of the highest class in Lloyd's Register. Before starting for Japan she was in dry dock at New York, and was there surveyed by Lloyd's surveyor. Some time before she had been in dry dock at Cardiff, where some repairs were made to the rudder, rudder quadrant and a ventilator. The master testified to the general good condition of the steamer at the time she sailed from Kobe. During and after delivery of the cargo, the main deck, the between deck, the pipes leading to or connected with No. 3 hold, and the shell plating in the wing of No. 3 hold were carefully examined by the officers of the ship, by surveyors representing the libelants and their underwriters, and it was afterwards examined by competent and experienced surveyors representing both parties. The decks, side plating, and rivets of the ship were found to be sound, intact, and free from leaks. No evidence (other than the mere circumstance that the damage was by sea water if that be considered evidence), was found that there had been leaks in any part of the frame, structure, side plating, riveting, pipes, or appurtenances of the ship, through which water might have reached that part of No. 3 hold where the damage was done. No adequate means of access of sea water were found, nor any defect in the steamer which then appeared to be seaworthy."

The questions of law arising upon the facts so stated were as follows:

"(1) Whether damage to the cargo of an apparently seaworthy ship through the unexplained admission of sea water, in the absence of any proof or fault on the part of the officers or crew of the ship, is of itself a sea peril within the meaning of the bill of lading exception above quoted?

"(2) Whether the ship is relieved from liability in consequence of said exception?"

In February, 1909, the Supreme Court answered in the negative the first question so certified, but did not answer the second question. In March, 1909, the claimant presented to this court a petition for a rehearing, which was granted, and a reargument had.

Wallace, Butler & Brown, for appellants.

Convers & Kirlin (J. Parker Kirlin and John M. Woolsey, of counsel), for appellee.

Before LACOMBE, COXE, and NOYES, Circuit Judges.

NOYES, Circuit Judge (after stating the facts as above). The Supreme Court has ruled that the unexplained admission of sea water into an apparently seaworthy ship is not of itself a sea peril within the meaning of the exceptions in the bill of lading. Upon the facts stated to the Supreme Court, therefore, it necessarily follows that the Fol-

mina is liable. The cargo of rice was injured while in her custody as a carrier through the action of sea water. It was not shown that the sea water came in through the action of external causes. The only exemption in the bill of lading claimed to cover damages so caused was that relating to perils of the sea. If, then, this court is to base its decision upon the statement of facts which it has already made, the only course is to reverse the decree appealed from. The appellee, however, contends that upon this rehearing this court should re-examine the question whether sea water in fact caused the damage. It urges with much force that the damage was caused by sweat and not by sea water. And if the question were an open one, it may well be doubted whether a majority of the court, as at present constituted, would find that sea water did cause the damage.

But we cannot regard the question as now an open one. This court has found as a fact that sea water caused the damage, and upon that finding has applied for and obtained the instructions of the Supreme Court. We do not now determine whether in a case where it clearly appears that a statement of fact accompanying a question certified to the Supreme Court was made through mistake or inadvertence, or in a case where new evidence has been received subsequently to the making of such statement, this court would have power to change the facts so found after the Supreme Court has answered the question, and render its decision upon the basis of the altered facts. That which we do now hold is that, where facts have been found and stated to the Supreme Court as the basis for asking its instructions, this court will not, after such instructions have been obtained, re-examine upon the identical evidence already considered controverted questions of fact which have been advisedly determined. And, applying this rule to the present case, this court must decline to accede to the contention of the appellee that it reconsider the question, upon the same record as before, whether sea water caused the damage.

The decree of the District Court is reversed, with costs, and the cause remanded, with instructions to enter a decree for the libelants for their damages, interest, and costs.

(173 Fed. 752.)

LOUISVILLE & N. R. CO. v. WOMACK et al.

(Circuit Court of Appeals, Sixth Circuit. November 8, 1909.)

No. 1,947.

1. RAILROADS (§ 359*)—INJURIES TO TRESPASSERS ON TRACK—DEGREE OF CARE REQUIRED.

Under the common law a railroad company owes no duty to a mere trespasser, on its tracks without the consent of any one having authority to permit his presence, except to do him no intentional or wanton injury.[1]

---

[1] See note at end of case.

2. RAILROADS (§ 400*)—INJURY TO PERSONS ON TRACK—ACTIONS—QUESTIONS FOR JURY.

Evidence *held* sufficient to warrant the submission to the jury of the question whether the employés of a railroad company, in charge of the engine of a freight train, which collided with a hand car, complied with Shannon's Code Tenn. § 1574, subsec. 4, which provides that the engineer, fireman, or some other person on the locomotive shall be kept always upon the lookout ahead, and that when any person, animal, or other obstruction appears on the road the alarm whistle shall be sounded, the brakes put down, and every possible means employed to stop the train and prevent an accident; there being evidence that the persons upon the hand car saw the engine when 200 yards distant, but that those on the engine did not see the hand car until within a car's length.

[Ed. Note.—For other cases, see Railroads, Cent. Dig. §§ 1367, 1373; Dec. Dig. § 400.*]

3. APPEAL AND ERROR (§ 263*)—QUESTIONS PRESENTED BY RECORD—NECESSITY OF EXCEPTIONS TO INSTRUCTIONS.

It is the settled rule of the federal courts that a charge not excepted to below cannot be assigned as error in a court of review.

[Ed. Note.—For other cases, see Appeal and Error, Cent. Dig. §§ 1516–1532; Dec. Dig. § 263.*]

4. APPEAL AND ERROR (§ 241*)—REVIEW—ESTOPPEL TO ALLEGE ERROR.

A motion by defendant at the close of the evidence for a directed verdict, although not required by the practice of the Circuit Court of Appeals to specify the grounds on which it is based, will not be considered by such court as embracing the question of the applicability of a state statute to the facts of the case, where it was tried by both parties on the theory that the statute was applicable, and submitted to the jury by the court on such theory by instructions to which no exceptions were taken.

[Ed. Note.—For other cases, see Appeal and Error, Dec. Dig. § 241.*]

In Error to the Circuit Court of the United States for the Eastern District of Tennessee.

Action by Mary Womack and others, by N. S. Nicholson, as next friend, against the Louisville & Nashville Railroad Company. Judgment for plaintiffs, and defendant brings error. Affirmed.

J. H. Frantz, for plaintiff in error.

M. R. Waite, for defendants in error.

Before LURTON, SEVERENS, and WARRINGTON, Circuit Judges.

LURTON, Circuit Judge. This is an action of tort for the alleged negligent killing of Levi Womack, the father of the plaintiffs below, who sued by their guardian, N. C. Nicholson. There was a jury, verdict for $1,000, and judgment thereon. The railroad company has sued out this writ of error.

It is assigned as error that the court denied the request of the plaintiff in error that the jury should be instructed to find a verdict for the railroad company. The deceased came to his death through a collision between a hand car and a freight train. He, together with seven others, four of them being women, had obtained one of the railroad company's hand cars and were operating it for their own pleasure upon the main track of the railway company's line in the early morning of June 17, 1906. The point where they began their perilous ride was

a mile or more north of where the company's line in Polk county, Tenn., crosses the bridge over the Hiwassee river. The car proceeded south, and upon reaching a point upon the trestle approaching the bridge came suddenly into collision with a train coming from the south, with the result that five of the occupants of the hand car were killed. There was some evidence that a special gang section foreman consented—though saying at the time that it was against the company's rules—that John Brinkley, one of his gang not that day on duty, might take the car out for a pleasure ride with some of his friends; he assuming the care of it. It was clearly shown that the company's rules absolutely forbade the use of such cars, except in the service of the company, and that the foreman had no authority to consent to any such use of the car. Brinkley was one of the men killed in the collision. The friends of Brinkley who were taken upon the car were neighboring young men, not in the service of the company, and their wives or sisters.

The trial judge, upon the facts of the case, instructed the jury that the occupants of the car were trespassers, and guilty of negligence in being where they were. This was plain law, and it followed that under the common-law counts of the declaration there could have been no recovery, in the absence of evidence that they were actually seen by the men operating the engine of the freight train in time to have stopped the train before a collision.

In Railroad v. Meacham, 91 Tenn. 428, 431, 19 S. W. 232, the court, in reference to an action for injury sustained in jumping from a timber train, which came into collision with a freight train, the plaintiff being on the train without the consent of any one having authority to permit his presence, reversed a judgment for the plaintiff, saying:

"The only duty due by the railroad company to the one who is an intruder upon its train, not used for transporting passengers, is to refrain from wantonly, willfully, or intentionally injuring him. If the proof had developed that the collision in this case was designed and brought about with the intent and for the purpose of injuring the defendant in error, although an intruder, he would be entitled to recover; otherwise, he would not."

In Railroad v. Williford, 115 Tenn. 108, 88 S. W. 178, it was held that one riding on an engine, not in the performance of any duty, is in a place of unnecessary danger, and that the only duty of the company toward such person is to avoid injury by any wanton or willful act.

In Kansas City, etc., Railroad v. Cook, 66 Fed. 115, 121, 13 C. C. A. 364, 370, 28 L. R. A. 181, we had to consider the care required from a railroad company at common law in respect to a trespasser upon its tracks in the yards of the company. In that case the court, after saying that the plaintiff was where he was without the invitation or consent of any one having authority to suspend the rules of the company forbidding the use of the tracks in the yards by strangers, said:

"Having no legal right to be where he was, the company stood in no such relation to him as it would to one at a street crossing, or to a passenger, or to an employé whose duty kept him in the yard. Aerkfetz v. Humphreys, 145 U. S. 420, 12 Sup. Ct. 835, 36 L. Ed. 758. It was negligence per se for one to intrude himself into such a place, and his presence there imposed no particular duty upon the company, except that general duty which every one owes to every other person to do him no intentional wrong or injury. Its lia-

bility for failure to discharge this duty can only arise when it becomes aware of the danger in which he stood."

This case has been approved by this court in Felton v. Aubry, 74 Fed. 350, 356, 20 C. C. A. 436, and B. & O. Ry. v. Anderson, 85 Fed. 413, 416, 29 C. C. A. 235.

In Singleton v. Felton, 101 Fed. 526, 528, 42 C. C. A. 57, 59, this court, in a case where a trespasser upon a construction train was injured through a negligent collision, said:

"Actionable negligence presupposes some duty owed to the person asserting a right of action by the defendant, and a breach of that duty. What was the relation between the deceased and the receiver? What duty was due by the receiver to him? He was not a passenger. The train was a construction train, and persons other than employés were rigidly excluded therefrom. He knew the rule of the railroad in this particular. He did not have the permission of the conductor or other employé on the train as an excuse for his presence, and thus we are not called upon to deal with the question as to whether the consent of an employé, who had no power to consent, would create a relation and impose a duty towards him. His presence on the train was unknown to those operating it. He was therefore unlawfully upon a train not intended for passengers, and, but for his own wrongful conduct in intruding himself there, would not have lost his life. He was not willfully injured. There was no intent to bring about the collision which cost him his life. His presence on the train being unknown, the rule which requires the exercise of ordinary care to avoid unnecessary injury to a trespasser after his presence and danger are observed has no application. The defendant, upon the facts, owed no duty to the deceased, and no action will lie for the negligence of the servants of the plaintiff by which the collision occurred. Actionable negligence consists in the failure to exercise that degree of care towards the plaintiff which was due to the plaintiff by the defendant under the circumstances of the case. That the servants of the defendant were under an obligation to exercise care in the movement of trains in order to prevent collisions may be conceded. This duty they neglected. But that was not a duty owed to the deceased under the facts of this case, and the breach of duty by which the collision occurred was not a duty to the deceased."

To the same effect are the cases of St. L. & S. F. Ry. Co. v. Bennett, 69 Fed. 525, 16 C. C. A. 300, and Northern Pacific Railway v. Jones, 144 Fed. 47, 49, 75 C. C. A. 205.

Stripping the case of all else, the trial judge submitted the plaintiff's case solely upon the count which charged a violation of the Tennessee statute regulating the operation of railway trains, and upon the question as to whether the railway company had complied with that statute. The applicable statute is as follows:

Shannon's Code Tenn. § 1574, subsec. 4:

"Every railroad company shall keep the engineer, fireman, or some other person upon the locomotive, always upon the lookout ahead; and when any person, animal, or other obstruction appears upon the road, the alarm whistle shall be sounded, the brakes put down, and every possible means employed to stop the train and prevent an accident."

Shannon's Code Tenn. §§ 1575, 1576:

"Every railroad company that fails to observe these precautions, or cause them to be observed by its agents and servants, shall be responsible for all damages to persons or property occasioned by, or resulting from, any accident or collision that may occur.

"No railroad company that observes, or causes to be observed, these precautions shall be responsible for any damage done to person or property on its road. The proof that it has observed such precautions shall be upon the company."

It will be observed that by the express terms of the statute the burden of showing compliance with the statute is placed upon the railroad company. The observation in Virginia & S. W. Railway Co. v. Hawk, 160 Fed. 348, 87 C. C. A. 300, that the burden was upon the plaintiff to show noncompliance was pure obiter, being in no way involved in the case. It was an erroneous statement of the law, for we have in many cases recognized and applied the statute as controlling in this court.

The construction of this statute by the Supreme Court of the state has also been regarded as furnishing a rule of decision for this court, when such interpretation is plain and consistent. The undoubted interpretation of this statute by the Tennessee court is that the precautions prescribed are mandatory, and that, while an impossibility is not to be understood as required, nevertheless every precaution required must be followed so far as time will permit. Although that eminent jurist, Justice Cooper, in Holder v. Railroad, 11 Lea (Tenn.) 176, 178, expressed grave doubt as to the correctness of the ruling that the omission of a precaution which would have been plainly useless is ground of liability, yet it is well settled that there is a statutory liability whenever there is a failure to comply fully with the statute, so far as time will allow, and that it is no defense to show that the omission could not have contributed to the accident. Chattanooga Transit Company v. Walton, 105 Tenn. 415, 420, 58 S. W. 737.

This disposes of the exception reserved to the charge because the court charged the jury that if the whistle was not blown the statute was not complied with, if there was time to blow, although the failure to blow had nothing to do with the collision.

So, also, has the statute been construed as entitling the plaintiff to recover in a case when the statute was applicable, irrespective of his own contributory negligence, however great. L. & N. R. R. Co. v. Burke, 6 Cold. (Tenn.) 45; Railway Company v. Foster, 88 Tenn. 672, 13 S. W. 694, 14 S. W. 428; Railroad Company v. Acuff, 92 Tenn. 26, 20 S. W. 348. This construction as to the absolute character of the statutory liability has been repeatedly followed by this court. Western & Atlantic Ry. v. Roberson, 61 Fed. 592, 603, 9 C. C. A. 646; Byrne v. Kansas City, etc., Railway, 61 Fed. 605, 614, 9 C. C. A. 666, 24 L. R. A. 693; Rogers v. Cincinnati, etc., Railroad, 136 Fed. 573, 69 C. C. A. 321.

The learned trial judge, notwithstanding the character of the deceased as a trespasser guilty of great negligence, instructed the jury, in accordance with the settled construction of the Tennessee statute, that such negligence must be regarded as a mitigation of damages, but would not go in bar of the action. In view of the arbitrary character of the statute in imposing an absolute liability, regardless of the negligence of the plaintiff, the Tennessee court has construed it as for the benefit of the general public, and not applicable to employés while about the service of the company. L. & N. R. R. v. Burke,

6 Cold. 45; Railroad v. Rush, 15 Lea, 145, 149; Railroad v. Holland, 117 Tenn. 257, 96 S. W. 758.

For the same reason the court has limited the operation of the statute to cases in which the intent that it should apply is manifest. Thus, in Railroad v. Rush, 15 Lea (Tenn.) 145, 149, it was said by the court, speaking by Justice Cooper:

"But in view of the stringent terms of the act, and the manifest object of the Legislature, the court has not extended its provisions to every case which might be embraced in its general language."

Thus it has been held not to apply to a passenger on a train injured by a collision brought about through failure to comply with its terms. The liability in such a case must depend upon common-law principle. L. & N. R. R. Co. v. McKenna, 75 Tenn. 313.

In Holder v. Railroad, 11 Lea (Tenn.) 176, it was held that there was no statutory liability unless the injury was the direct result of being struck by a moving train. An animal running ahead of a moving train was injured by jumping off of a trestle. It was held that, not having come into collision with the train, the liability would depend upon common-law principles.

In Railroad v. Reidmond, 11 Lea (Tenn.) 205, and Railroad v. Howard, 90 Tenn. 144, 19 S. W. 116, it was held that the statute does not come into opération until the person, animal, or obstruction comes within striking distance of the train. We followed and applied this construction in Rogers v. C., N. O., etc., Railway, 136 Fed. 573, 69 C. C. A. 321.

In Railroad v. Burke, 6 Cold. (Tenn.) 45, and Railroad Company v. Rush, 15 Lea (Tenn.) 145, 150, it was said that:

"The statute was intended for the benefit of the general public, not for the servants of the company."

In accord with this are Railroad v. Robertson, 9 Heisk. (Tenn.) 276, and Haley v. Railroad, 7 Baxt. (Tenn.) 239, where it was ruled that the statute did not apply to employés about its yards.

In Cox v. Railroad, 2 Leg. Rep. 168, it was held to have no application to a stranger in the switching yards. Nor in any case where the plaintiff is a servant whose negligence contributed to the collision. Railroad v. Rush, 15 Lea, 145.

In Railroad v. Hicks, 89 Tenn. 301, 17 S. W. 1036, the statute was held not applicable to a railway employé using a railway velocipede in discharge of his duty.

In Railroad v. Holland, 117 Tenn. 257, 96 S. W. 758, it was again held that the statute is for the benefit of the general public only, and was not applicable to an employé using a velocipede for his own convenience and without consent of the company.

In Rogers v. Railroad, cited before, we held the statute not applicable to men doing construction work, whose duty kept them on or about the track, although not the direct servants of the railway company, but employés of a contractor doing such work for the company.

The court below submitted the case to the jury upon the single question as to whether the statute had been complied with, though he expressed the opinion that every requirement of the statute had been

complied with which was possible after the car was seen or could have been seen, saying very plainly, however, that they must for themselves determine this question of fact. Upon this single issue the jury manifestly found for the plaintiff. It is now urged that there was no such conflict in the facts as to make an issue to go to the jury, and that the court erred in not directing a verdict. Upon this point we have carefully examined the record, and are convinced that there was some material evidence upon which it was right to take the opinion of the jury. Thus, the men upon the engine say that they were upon the lookout ahead and did not see the approaching hand car until they were practically within a car length of it, and that they put on the brake and shut off steam, but before the brake could take effect the collision occurred, and that there was no time to do anything more. The speed of the train was about 15 miles per hour, and that of the hand car about the same. The survivors upon the hand car say that they saw the stack and front of the engine at a distance of 200 yards; that they applied the brake, and did all they could to stop the car; that it was slowing down, but, seeing a collision almost certain, they jumped off. Now it is plain that if the train could be seen by those upon the hand car at a distance of 200 yards, the lookout upon the engine ought to have seen the hand car nearly as soon. The only obstacle to a clear vision for a mile or more was a summer morning fog hanging on the river where it was crossed by the railway bridge. There was a conflict of opinion as to the thickness and height of this fog at this bridge, and as to its effects in hiding the approach of the train and hand car to each other. It cannot be said that there was not material evidence from which the jury might have inferred that, if the men on the engine had been as watchful for persons or obstructions upon the track as the statute, under the construction of the Tennessee court, required them to be, they might have seen this hand car before they say they saw it, and might have had time to have done more than they actually did do when they did see it. If, therefore, the statute was applicable upon the facts of the case, there was no error in letting the plaintiff go to the jury upon the question of whether it had been complied with so far as possible.

The learned counsel for the plaintiff in error now urge very strongly that upon the undisputed facts of this case the statute was not applicable, and that it was error to submit to the jury any question as to whether its rigid requirements had been complied with. They urge that, if it was not applicable, the company was under no other duty with respect to the plaintiffs as trespassers upon its hand car than to do all that could be done after this hand car was actually observed to be in danger of coming into collision with the train. It is also said that under the ruling in L. & N. R. R. Co. v. McKenna, 75 Tenn. 313, the statute does not apply when a passenger is injured in consequence of a collision which might have been avoided by observance of the statute, and that the liability must rest upon common-law principles; that under this construction of the statute, the statute had no application, even if the deceased be regarded as rightfully being transported as a passenger upon one of the company's vehicles. The difficulty which lies in the way of considering the case in either aspect is

that the case was tried out below upon the theory that the statute was applicable and had been complied with. The court so charged the jury, and no exception to this was reserved. Nothing is better settled than that a charge not excepted to below cannot be assigned as error in a court of review. Some of the cases in which this plain rule of practice has been applied are Rogers v. Ritter, 12 Wall. 317, 320, 20 L. Ed. 417, Upton v. McLaughlin, 105 U. S. 640, 644, 26 L. Ed. 1197, Storm v. U. S., 94 U. S. 76, 81, 24 L. Ed. 42, and Express Co. v. Kountze Bros., 8 Wall. 358, 19 L. Ed. 457.

But it is said that the denial of a peremptory instruction includes every ground upon which it ought to have been granted, whether stated or not. We have never regarded this court as concluded by the reasons stated by a trial judge for his action upon a motion for a peremptory instruction upon the close of the evidence. If the ruling was right upon any ground, it would be folly to reverse. Neither have we required that the grounds or reasons upon which such an instruction was asked should be always stated by counsel and shown by the record, when such denial is relied upon as error under an exception reserved, as seems to be the practice in the Seventh Circuit Court of Appeals. Adams v. Shirk, 104 Fed. 54, 43 C. C. A. 407. We have indulged the presumption, whether such a motion was allowed or disallowed, that it embraced an insufficiency of evidence upon any clear issue upon which the case was submitted to the jury. But we think this practice should not apply when it involves, as it does here, the necessity of holding that the court ought to have peremptorily instructed the jury upon a matter of law in direct conflict with the theory upon which the parties had tried the case, and with the charge of the court that the statute was applicable, to which no exception was taken. It is not just to the parties, nor to the trial judge, to permit this question to be raised for the first time in this court, when, as here, it is shown upon the record that the converse of the point now made was ruled by the court below, and no objection reserved.

Judgment affirmed.

NOTE.

Care Required of Railroads as to Trespassers on or near Tracks.

I. In General.

[a] A railroad company must exercise ordinary diligence and care to avoid injury to a trespasser on its track.

—(U. S. 1907) Texas & P. Ry. Co. v. Modawell, 80 C. C. A. 651, 151 Fed. 421, 9 L. R. A. (N. S.) 646;

(Ala. 1907) Birmingham Ry., Light & Power Co. v. Jones, 45 South. 177;

(Ark. 1908) St. Louis, I. M. & S. Ry. Co. v. Raines, 86 Ark. 306, 111 S. W. 262; Little Rock & M. Ry. Co. v. Russell, 113 S. W. 1021;

(Del. 1869) Patterson v. Philadelphia, W. & B. R. Co., 4 Houst. 103;

(Ill. 1867) Toledo, W. & W. R. Co. v. Furgusson, 42 Ill. 449; (1868) Pittsburg, Ft. W. & C. R. Co. v. Bumstead, 48 Ill. 221, 95 Am. Dec. 539; (1869) Chicago, B. & Q. R. Co. v. Payne, 49 Ill. 499;

(Iowa, 1891) Clampit v. Chicago, St. P. & K. C. Ry. Co., 84 Iowa, 71, 50 N. W. 673;

(Ky. 1895) Gherkins v. Louisville & N. R. Co., 30 S. W. 651; (1907) Chesapeake & O. Ry. Co. v. Nipp's Adm'x, 100 S. W. 246, 30 Ky. Law Rep. 1131; (1907) Adams' Adm'x v. Louisville & E. R. Co., 104 S. W. 363, 31 Ky. Law Rep. 987; (1908) Starett v. Chesapeake & O. Ry. Co., 110

S. W. 282, 33 Ky. Law Rep. 309; (1908) Cummings v. Illinois Cent. R. Co., 110 S. W. 809, 33 Ky. Law Rep. 584; (1908) Burton's Adm'r v. Cincinnati, N. O. & T. P. Ry. Co., 113 S. W. 442; (1908) Cincinnati, N. O. & T. P. Ry. Co. v. Earls' Adm'r, 113 S. W. 854; (1909) Cincinnati, N. O. & T. P. Ry. Co. v. Sowders' Adm'r, 119 S. W. 203;

(Mo. 1907) Burde v. Chicago, B. & Q. Ry. Co., 123 Mo. App. 629, 100 S. W. 509; (1908) Holland v. Missouri Pac. Ry. Co., 210 Mo. 338, 109 S. W. 19;

(N. H. 1890) Felch v. Concord R. R., 66 N. H. 318, 29 Atl. 557;

(N. Y. 1888) Remer v. Long Island Co., 48 Hun, 352, 1 N. Y. Supp. 124;

(N. C. 1890) Lay v. Richmond & D. R. Co., 106 N. C. 404, 11 S. E. 412; (1892) Norwood v. Raleigh & G. R. Co., 111 N. C. 236, 16 S. E. 4;

(Or. 1894) Ward v. Southern Pac. Co., 25 Or. 433, 36 Pac. 166, 23 L. R. A. 715;

(Pa. 1863) Philadelphia & R. R. Co. v. Hunmell, 44 Pa. (8 Wright) 375, 84 Am. Dec. 457;

(S. C. 1883) Carter v. Columbia & G. R. Co., 19 S. C. 20, 45 Am. Rep. 754;

(Tenn. 1883) East Tennessee, V. & G. R. Co. v. Fain, 80 Tenn. (12 Lea) 35;

(Tex. 1906) Houston & T. C. R. Co. v. Ramsey (Civ. App.) 97 S. W. 1067; (1908) Galveston, H. & N. Ry. Co. v. Olds (Civ. App.) 112 S. W. 787;

(Utah, 1908) Palmer v. Oregon Short Line R. Co., 34 Utah, 466, 98 Pac. 689.

(Va. 1906) Chesapeake & O. Ry. Co. v. Farrow's Adm'x, 106 Va. 137, 55 S. E. 569.

[b] A trespasser upon a railroad track cannot recover for injuries inflicted by the company, unless the company was wantonly or grossly negligent.

—(U. S. 1908) Southern Ry. Co. v. Fisk, 86 C. C. A. 373, 159 Fed. 373;

(Ala. 1891) Glass v. Memphis & C. R. Co., 94 Ala. 581, 10 South. 215; Memphis & C. R. Co. v. Glass, Id.; (1907) Southern Ry. Co. v. Stewart, 45 South. 51;

(Ill. 1893) Eggmann v. St. Louis, A. & T. H. R. Co., 47 Ill. App. 507; (1907) Chicago & A. R. Co. v. Bell, 133 Ill. App. 56;

(Ind. 1886) Chicago & E. I. R. Co. v. Hedges, 105 Ind. 398, 7 N. E. 801;

(N. Y. 1908) Kurt v. Lake Shore & M. S. Ry. Co., 127 App. Div. 838, 111 N. Y. Supp. 859, affirmed 88 N. E. 1122; (1909) Neuberger v. Long Island R. Co. (Sup.) 116 N. Y. Supp. 311;

(Ohio, 1886) Driscoll v. Cincinnati, W. & B. Ry. Co., 1 O. C. D. 274;

(Tex. 1882) Houston & T. C. R. Co. v. Boozer, 2 Posey, Unrep. Cas. 452;

(Utah, 1908) Palmer v. Oregon Short Line R. Co., 34 Utah, 466, 98 Pac. 689.

[c] (Ala. 1907) A trespasser was lying down on the railroad track, and the engineer and fireman saw him 80 or 90 yards from where he was struck by the train. There was nothing to show that the train could have been stopped in time to have saved him, or that the operators did not attempt to stop it as soon as they discovered his position. *Held*, that the railroad as a matter of law was not liable.—Southern Ry. Co. v. Gullatt, 43 South. 577.

[d] (Ga. 1885) It is not error to refuse to charge that a railroad company is not liable for an injury to a trespasser on its tracks, caused by its engine, unless it is shown that the acts of the company's servants in charge of the engine were wanton and malicious, or there was such gross negligence on their part as was tantamount to willfulness.—Western & A. R. R. v. Meigs, 74 Ga. 857.

[e] (Ind. 1907) Where the circumstances were sufficient to apprise a locomotive engineer of a peril ahead which might involve life or limb, and he did not stop his engine, the mere fact that the person injured was a technical trespasser would not bar a recovery. Rehearing (1906) 79 N. E. 508, denied. —Chicago, I. & L. Ry. Co. v. Pritchard, 81 N. E. 78.

[f] (Ky. 1895) One who is injured while trespassing on a railroad track cannot complain that the injury was owing to the size or weight of the train or to defective brakes.—Brown's Adm'r v. Louisville & N. R. Co., 97 Ky. 228, 30 S. W. 639.

[g] (Ky. 1906) A train running through a populous community, where the track is known to be commonly used as a footway, must be operated with the probable presence of a trespasser in mind, with a lookout, so as to give timely warning, and under control, so as to stop, in case of necessity, before injury

is done.—Illinois Cent. R. Co. v. Murphy's Adm'r, 97 S. W. 729, 30 Ky. Law Rep. 93.

[h] (Ky. 1907) Where the use of a railroad company's tracks at the place in question by pedestrians had been confined largely to Sundays and to reasonable hours in the daytime, the railroad company was not bound to expect or required to be on the lookout for trespassers on the track at that point at midnight.—Hoback's Adm'r v. Louisville, H. & St. L. Ry. Co., 99 S. W. 241, 30 Ky. Law Rep. 476.

[i] (Miss. 1893) In an action against a railroad company for personal injuries received by plaintiff while a trespasser on defendant's track, it is error to charge that plaintiff could not recover unless the engineer intentionally and purposely ran him down, and unless the conduct of defendant's servant "was regardless of consequences, and without effort to prevent injury."—Christian v. Illinois Cent. R. Co., 71 Miss. 237, 15 South. 71.

[j] (Mo. 1906) The operatives of a railroad train owed no duty to one walking on the track in the nighttime at a place where the track was fenced and in the vicinity of signs warning people to keep off the tracks, where there was nothing to show that notice of any use of the track by pedestrians in the nighttime had been brought to the attention of the company.—Frye v. St. Louis, I. M. & S. Ry. Co., 200 Mo. 377, 98 S. W. 566.

[k] (Mo. 1907) An engineer is entitled to presume that the track is clear, except at places where people have a lawful right to be, or where by open, continuous, and extensive use the track has become a path for footmen or put to some similar use.—Burde v. Chicago, B. & Q. Ry. Co., 123 Mo. App. 629, 100 S. W. 509.

[l] (Mo. 1908) The doctrine that a railway company is only liable for injury to a person on its track caused by wanton negligence or willfulness applies only where the injured person was a trespasser and was injured at a place where the company's agents and servants in charge of the train had no notice or reason to apprehend that any person would be.—Everett v. St. Louis & S. F. R. Co., 214 Mo. 54, 112 S. W. 486.

[m] (Or. 1887) The fact that persons are liable to be upon a railroad track at a particular locality, if the managers of the train have reasonable grounds to expect it, imposes a duty upon such managers that they would not ordinarily be under, whether the persons are upon the track rightfully or wrongfully.—Cassida v. Oregon Ry. & Nav. Co., 14 Or. 551, 13 Pac. 438.

[n] (Pa. 1875) It is not common prudence or ordinary care for trains to enter the outskirts of a city at a dangerous rate of speed, although the people have no right to go on the railroad track. Although persons on a railroad track are trespassers, regard must be had to the habits, character, condition, and circumstances of a people living in a city and immediately on the line of a railroad.—Pennsylvania R. Co. v. Lewis, 79 Pa. (29 P. E. Smith) 33.

[o] (S. C. 1883) A railway company is not liable for the death of one who, while traveling without right along its track, picked up a torpedo which had been placed there as a danger signal, and which exploded and killed him while he was handling it.—Carter v. Columbia & G. R. Co., 19 S. C. 20, 45 Am. Rep. 754.

II. As to Children.

[a] (U. S. 1896) A railroad company owes no higher duty to an infant trespassing upon its tracks than to an adult, and is not liable for injuries suffered by such a trespasser, unless, after the discovery of his presence on the track, it has failed to use ordinary care to avoid injuring him.—Felton v. Aubrey, 20 C. C. A. 436, 74 Fed. 350, 43 U. S. App. 278.

[b] (U. S. 1882) The rule requiring railroad companies to exercise the utmost care and diligence applies, in the absence of statutory provisions, only in favor of passengers, and not to the case of a child trespassing upon the track. In the latter case the company is required to do only what prudent owners of railroads are doing in respect to their trains and equipments.—Ex parte Stell (C. C.) Fed. Cas. No. 13,358 [4 Hughes, 157].

[c] (Ala. 1909) A child lying down on a railroad track between the rails, with his foot over a rail, is a trespasser.—Southern Ry. Co. v. Smith, 50 South. 390.

[d] (Ill. 1871) The fact that a person injured while crossing defendant's railroad track, at a place not a crossing, by a defective track, was an infant,

adds nothing to the railroad company's duty.—Lake Shore & M. S. Ry. Co. v. Clark, 41 Ill. App. 343.

[e] (Ky. 1907) A boy at cars on a switch within the exclusive possession of a railroad company is a trespasser, though persons frequently cross the railroad for their own convenience near the place where the boy was, and the employés of the railroad owed him no lookout duty but were only required to guard against injuring him after his danger was discovered.—Elliott v. Louisville & N. R. Co., 99 S. W. 233, 30 Ky. Law Rep. 471.

[f] (Ky. 1908) Where a child strayed on defendant's railroad track at a point where she had no right to be and was killed by a train, she being a trespasser, the operatives of the train by which she was struck owed her no duty, except to exercise reasonable diligence to prevent injury to her after her peril was discovered.—O'Bannion's Adm'r v. Southern Ry. Co. in Kentucky, 110 S. W. 329, 33 Ky. Law Rep. 315, 436.

[g] (Mass. 1907) Plaintiff, a boy 8½ years old, with other boys, stepped from a retaining wall at the side of a cut onto one of the cars of a train stopped in the cut, a distance of 15 to 18 inches, and, after stepping from the car to the wall and back again several times, sat down on the car till it started up, several minutes later, when, proceeding to walk towards the rear of the train, he lost his balance and fell between that and the next car. He had often played on and about the cars before, knew he was not wanted there, and was familiar with the signals for stopping and starting the trains. *Held*, that a wanton disregard for his safety, making the company liable, was not shown by the starting of the train in the usual way, without first removing the trespassers or taking measures for their safety, though a few minutes before it was started a brakeman walked past them on the car, and he or another brakeman, while standing near them, signaled for the train to start.—Anternoitz v. New York, N. H. & H. R. Co., 193 Mass. 542, 79 N. E. 789.

[h] (Mich. 1906) A stream, which was stocked with fish by the state, ran through a lumber yard; all persons who desired to do so being admitted to the yard, that they might fish in the stream. A child, seven years of age, was fishing there, when defendant's train entered the yard on a siding and struck an empty car with such force as to push it over the end of the siding, when it struck and killed the child. Ties and rails had been thrown up at the end of the siding to prevent any car from passing off the rails. *Held*, that defendant was guilty of actionable negligence.—Black v. Michigan Cent. R. Co., 146 Mich. 568, 109 N. W. 1052, 13 Detroit Leg. N. 863.

[i] (Mo. 1877) The liability of a railroad company for injuries to a child who is a trespasser will not be restricted to such injuries as are wanton, but will embrace all such as result from the want of ordinary care.—Hicks v. Pacific R. Co., 64 Mo. 430.

[j] (Mo. 1907) Where a child accompanied a passenger to a railroad station, and after the departure of the passenger's train, and while the child was standing on the platform, servants in charge of a locomotive caused steam to be discharged therefrom, causing the child to go upon one of the tracks in an attempt to escape from the steam, a contention that while upon such tracks she was a trespasser was without merit.—Lange v. Missouri Pac. Ry. Co., 208 Mo. 458, 106 S. W. 660.

[k] (Pa. 1864) Where a person, though an infant, is unlawfully on a railroad track, the railroad company is not liable for running over and injuring him.—Crawford v. Railroad Co., 5 Phila. 359.

[l] (Tex. 1895) That a young boy may have been a trespasser at the stock pens of a railway company will not relieve it of the duty of ordinary care to prevent injury to him, and the company is liable where his foot is injured by the negligence of its employés in failing to move a gang plank far enough back to prevent a car from striking it.—Gulf, C. & S. F. Ry. Co. v. Cunningham (Civ. App.) 30 S. W. 367.

[m] (Tex.) Where, in an action against a railroad company for injuries to a child run over by its cars, the facts disclosed created no duty on the part of the company to the child, there could be no negligence, and therefore no liability. Judgment (Civ. App. 1908) 108 S. W. 1187, reversed.—(1908) International & G. N. R. Co. v. Vallejo, 113 S. W. 4, judgment affirmed on rehearing (1909) 115 S. W. 25.

[n] (Tex. 1909) A railroad company is bound to exercise ordinary care to discover a child, not guilty of contributory negligence, though a trespasser, on its track.—Ft. Worth & D. C. Ry. Co. v. Poteet (Civ. App.) 115 S. W. 883.

[o] (Utah, 1908) While an adult trespasser on railroad premises may be expected to take care of himself and keep out of danger, and the employés operating cars may regulate their conduct on such assumption until it is apparent that he is not aware of the peril, yet, when a child of tender years is discovered about the premises, the employés may not act on the assumption that it will take care of itself, but they must exercise care commensurate with the situation to avoid injury.—Smalley v. Rio Grande Western Ry. Co., 34 Utah, 423, 98 Pac. 311.

[p] (Wash. 1894) Where the persons operating a railroad train have no reason to suspect the presence of a boy 10 years old, who is trespassing on the right of way, he can get no benefit from the fact of his tender years, and the company is not liable for injuries to him, in the absence of such gross negligence as amounts to wantonness.—Matson v. Port Townsend Southern R. Co., 9 Wash. 449, 37 Pac. 705.

[q] (W. Va. 1892) A child of four years, who is killed by a train while sitting on or near a railroad track, cannot be held to have been a trespasser so as to release the railroad company from liability, if by the use of ordinary care it could have seen him in time to avoid the accident.—Gunn v. Ohio River R. Co., 36 W. Va. 165, 14 S. E. 465, 32 Am. St. Rep. 842.

III. PERSONS ON OR NEAR STREET CROSSINGS.

[a] (Ind. 1903) Plaintiff's decedent was going to defendant's station to board a train, which was approaching on the main track, and was killed in passing over a side track at a regular crossing place. Detached freight cars were standing on the siding, and the death was caused by an engine suddenly backing against them, without warning. *Held* the mere failure of decedent to look towards the engine before crossing the track was not negligence as matter of law.—Stoy v. Louisville, E. & St. L. Consol. R. Co., 66 N. E. 615.

[b] (Kan. 1898) Where a freight train standing on a side track which crosses a street is divided at the crossing, and the gates are not closed, and the flagman is not in sight, and no employé of the company is on or near the rear end of the train, and no signals are given, contributory negligence is not proved on the part of one who passes along the street and between the parts of the freight train, and, finding that another train is about to pass on the main track, stands so close to the side track that he is killed by the backing of the train on the side track.—Williams v. Atchison, T. & S. F. R. Co., 53 Pac. 834.

[c] (Kan. 1902) A traveler on a city street passing in front of an engine standing without the bounds of a highway, but so near to it that from the cab windows the street can be plainly seen, has a right to assume that the engineer will not, without warning, start his locomotive and run over her, before she can, in the exercise of ordinary care, cross the tracks.—St. Louis & S. F. Ry. Co. v. Dawson, 67 Pac. 521.

[d] (Ky. 1905) Decedent, while waiting at a street crossing for a train to pass, stood on a side track 8 or 10 feet off the line of the street, and about 20 feet from an engine standing on the side track. Before the train completely passed, the engine, in backing up, ran over decedent. *Held* that he was not guilty of such negligence as to prevent recovery for his death.—Illinois Cent. R. Co. v. Hays' Adm'r, 84 S. W. 338, 27 Ky. Law Rep. 91.

[e] (Mo. 1897) One who, 25 feet before entering a crossing on a street, observes a freight train standing on the track headed from him, but after that looks no further, and is hurt by a car that has been "kicked" back, where there was no warning of its approach, is not, as a matter of law, guilty of contributory negligence.—Pinney v. Missouri, K. & T. Ry. Co., 71 Mo. App. 577.

[f] (Tex. 1900) Where plaintiff drove her horse in close proximity to an engine at a street crossing frequently used by the public, and the horse became frightened by a sudden and unexpected starting of the engine accompanied by unnecessary noise of escaping steam, and ran away, injuring plaintiff, she was not guilty of contributory negligence; the horse being gentle and not usually frightened by the ordinary noise of engines.—San Antonio & A. P. Ry. Co. v. Belt (Civ. App.) 59 S. W. 607.

[g] (Tex. 1901) Plaintiff, who was driving a gentle horse, attempted to cross defendant's railroad tracks at a regular street crossing, near which an engine had been left standing partly in the street, without attendants, and with the steam up. Plaintiff stopped, thinking the engine might start; but seeing that it was not going to move, and that another team was passing, and knowing that it was about time for a passenger train, he started to drive across. When nearly opposite the engine, it began to blow off steam, frightening his horse, and causing it to run away. *Held*, that plaintiff was not guilty of contributory negligence.—Texas Midland R. R. v. Cardwell (Civ. App.) 67 S. W. 157.

IV. PERSONS ON OR NEAR HIGHWAY CROSSINGS.

[a] (Ind. 1881) In an action for injuries to a horse, which became frightened at the escape of steam, etc., from a locomotive, *held*, that the servants of the owner of the horse assumed the risk in attempting to lead the horse over the crossing in front of the locomotive.—Louisville & N. R. Co. v. Schmidt, 81 Ind. 264.

[b] (Ind. 1905) Where one driving started across railroad tracks in front of an engine attached to a train, he assumed the risk of his horse becoming frightened at noises made in the ordinary handling of a train.—Lake Erie & W. R. Co. v. Fike, 74 N. E. 636.

[c] (Kan. 1896) A traveler approaching a railroad crossing is under no greater obligation to use care to prevent injury by fright of his horse at a hand car standing there than he would be under while passing any other object at any other point on the road.—Atchison, T. & S. F. R. Co. v. Morrow, 4 Kan. App. 199, 45 Pac. 956.

[d] (N. C. 1901) Defendant's train had stopped at its station for a few minutes, with its locomotive standing on a highway crossing, with steam escaping, and blocking about one-third of the highway, when plaintiff attempted to cross in front of it, and his horse became frightened and broke its harness, and plaintiff then jumped from his buggy and was injured. Plaintiff had recently purchased the horse, but did not know that it was safe. *Held* that, as a matter of law, the accident was due to plaintiff's contributory negligence.—Miller v. Wellington & P. R. Co., 128 N. C. 26, 38 S. E. 29.

[e] (Tex. 1897) Plaintiff's wife approached defendant's railroad crossing driving a horse which she had driven for several years, and which had been found to be gentle. Defendant's employés had left a hand car loaded with tools in such a position as to obstruct the highway, and the horse became frightened at the obstruction; and, after the employés had moved the hand car off the crossing, the woman urged the horse across the tracks, and it then ran away, and she was killed. *Held*, that she was not negligent.—Sherman, S. & S. Ry. Co. v. Bridges (Civ. App.) 40 S. W. 536.

[f] (W. Va. 1903) To excuse a railroad company from suddenly and without warning backing a freight train against a person on a public crossing, it must be shown that such person was guilty of contributory negligence, such as one of ordinary prudence would not be guilty of under the same circumstances.—Meeks v. Ohio River Ry. Co., 52 W. Va. 99, 43 S. E. 118.

V. PERSONS ON RIGHT OF WAY.

[a] (Ark. 1907) One walking along a path on the right of way of a railroad was a trespasser to whom the operatives of a train owed no positive duty of care, but only the duty to exercise ordinary care not to injure him after discovering him in a perilous position.—St. Louis S. W. Ry. Co. v. Bryant, 99 S. W. 693.

[b] (Conn. 1885) A railroad company is under no obligation to locate its tracks, and adjust the running of its trains, so as to make it safe for persons unlawfully to trespass on its right of way.—Nolan v. New York, N. H. & H. R. Co., 53 Conn. 461, 4 Atl. 106.

[c] (Ill. 1905) A person who travels on the right of way of a railroad company not for any purpose or business connected with the railroad, but for his own mere convenience as a footway, is a trespasser, and the company owes him no duty, except to refrain from wantonly or willfully injuring him and to use reasonable care to avoid injury to him after he is discovered to be in peril.—McGuire v. Chicago & E. I. R. Co., 120 Ill. App. 111.

[d] (Ill. 1905) Where persons undertake to cross railroad tracks by passing over the grounds of a railway company, even though they do not know that they are on such grounds, they do so at their peril, notwithstanding the company had not previously seen fit to enforce its rights and prevent people from crossing there, and such company is not bound to protect or provide safeguards for such persons so using its grounds.—McLain v. Chicago & N. W. Ry. Co., 121 Ill. App. 614; Gabriel v. Same, Id.

[e] (Ill. 1908) A railroad company owes to a trespasser on its tracks and right of way no duty except to refrain from wantonly or willfully injuring him. The fact that many other persons have been in the habit of traveling on the right of way of such company, and no measures had been taken to prevent it, does not operate to change the relative rights of such a trespasser and the company.—Fosbury v. Aurora, E. & C. Ry. Co., 141 Ill. App. 98.

[f] (Ill. 1908) The employés of a railroad company are under no obligation to keep a lookout for trespassers upon the right of way of a railroad, and are not guilty of willful or wanton negligence as against such trespassers for failing to do so.—Carroll v. Chicago, B. & Q. Ry. Co., 142 Ill. App. 195.

[g] (Ind. 1906) Though one standing near a railway track may have been a trespasser, the company was liable for injuries occasioned by the failure of an engineer to stop a train in obedience to signals, though the engineer did not know why he was signaled to stop.—Chicago, I. & L. Ry. Co. v. Pritchard, 79 N. E. 508, transferred from appellate court 78 N. E. 1044, and rehearing denied (1907) 81 N. E. 78.

[h] (Neb. 1894) A railroad company is bound, in all cases, to exercise reasonable care to avoid injuring trespassers known to be, or who may be reasonably expected to be, on its right of way.—Chicago, B. & Q. R. Co. v. Wymore, 40 Neb. 645, 58 N. W. 1120; Same v. Wilgus, 40 Neb. 660, 58 N. W. 1125.

VI. PERSONS IN SWITCHING YARDS OR DEPOT GROUNDS.

[a] (U. S. 1895) A railroad company owes no duty to one who has gone into its switching yard for purposes of curiosity merely, in violation of its rules, except to refrain from wanton or reckless injury to such person.—Kansas City, Ft. S. & M. R. Co. v. Cook, 13 C. C. A. 364, 66 Fed. 115, 31 U. S. App. 277.

[b] (Ark. 1908) One walking along a path in a railway yard, not a public highway, was a trespasser.—St. Louis, I. M. & S. Ry. Co. v. Lavendusky, 113 S. W. 204.

[c] (Ill. 1896) Where one approaches a single track used only for switching, on which freight cars are standing to which no engine is attached, he is not negligent in assuming that to pass over the track is reasonably safe.—Illinois Steel Co. v. Szutenbach, 64 Ill. App. 642.

[d] (Ind. 1906) An employé of an independent contractor, repairing a depot, left the place of his work and went to the depot platform to procure a lifting jack. There was no agreement between the railroad and the independent contractor or the employé who should furnish the necessary appliances. The employé could have, by going across the street, obtained a jack from a private individual; but he undertook to use the jack belonging to the railroad. *Held*, that the employé was not a trespasser on the railroad property while procuring the jack, and the railroad could not defeat an action for injuries occasioned by its employés moving a car and injuring him, on the theory that it owed him no duty.—Pittsburgh, C., C. & St. L. Ry. Co. v. Cozatt (App.) 79 N. E. 534.

[e] (Ind. 1906) Where decedent was assisting in loading a railway car for shipment by his employer, when some one nearby shouted an alarm to stop an approaching train, and decedent left his place and went around the car to a point where he could see the train, to render any assistance emergency might require, he was not a trespasser at that point.—Chicago, I. & L. Ry. Co. v. Pritchard, 79 N. E. 508, transferred from appellate court 78 N. E. 1044, and rehearing denied (1907) 81 N. E. 78.

[f] (Ky. 1906) One who goes into the private switchyard of a railroad company and upon a bridge so narrow as to leave no room for a pedestrian when a train was crossing, there being at the end of the bridge a sign warning trespassers to keep off, is a trespasser to whom the company owes no duty except to prevent injury after discovery, notwithstanding that the yard is within the corporate limits of a city, the bridge not being at the intersection of a public highway.—Prince v. Illinois Cent. R. Co., 99 S. W. 293, 30 Ky. Law Rep. 469.

[g] (Ky. 1908) While through express trainmen naturally know nothing of a private path across the track near a way station, the company is charged with knowledge that at such station is a town of 400 or 500 people, and that its depot is approached by persons walking along the track in both directions, there being no other adequate way to get to it, and so must be held to know that this is a place at which the presence of persons on the track might reasonably be anticipated.—Louisville & N. R. Co. v. McNary's Adm'r, 108 S. W. 898, 32 Ky. Law Rep. 1266.

[h] (Md. 1908) Where a trespasser on a railroad track is struck by a train while walking on the track near a station, he cannot invoke in extenuation of his negligence the failure of the railroad company to comply with Code Pub. Gen. Laws, art. 23, § 266, requiring trains to stop for a half minute at stations for the purpose of taking on passengers.—Chesapeake Beach Ry. Co. v. Donahue, 68 Atl. 507.

[i] (Miss. 1892) A railroad is not liable for injury to a person standing idly on a switch track, where he is not seen, and has no right to be, unless the injury is willful and wanton.—Dooley v. Mobile & O. R. Co., 69 Miss. 648, 12 South. 956.

[j] (Utah, 1908) Employés operating cars in a railroad yard are under no duty to use care towards a person intruding, without authority, on the premises, until his presence is discovered.—Smalley v. Rio Grande Western Ry. Co., 34 Utah, 423, 98 Pac. 311.

VII. Persons on Hand Cars or Railroad Tricycles.

[a] (Ill. 1885) Where decedent, the keeper of a railroad boarding house, was riding on a hand car with a number of sectionmen for the purpose of receiving their pay from the railroad company at a place two miles from the place where they were working, decedent stood in the same relation with the sectionmen with respect to her right to be on the hand car, and was not a trespasser, and where she was killed by the negligence of the railroad company in permitting a train to run down the hand car, her representatives could recover for her death.—Chicago & E. I. R. R. Co. v. McKnight, 16 Ill. App. (16 Bradw.) 596.

[b] (Ky. 1895) A trespasser using a hand car on a railroad track cannot recover for injuries due to a collision with defendant's train, in the absence of evidence that the injury could have been prevented by the operators of the train after discovering the danger.—Eastern Kentucky Ry. Co. v. Powell, 33 S. W. 629.

[c] (Ky. 1908) One inducing a railroad employé to use a tricycle on the track to take him to a station, notwithstanding the orders of the railroad furnishing the tricycle to the employé for use by him when necessary prohibited it, is a trespasser, and the railroad owes him no duty except to avoid injuring him after the discovery of his peril, by exercising ordinary care in the use of the instrumentalities which the engineer in charge of the train has.—Illinois Cent. R. Co. v. Tyson's Adm'x, 108 S. W. 863, 32 Ky. Law Rep. 1390.

(173 Fed. 759.)

ERIE R. CO. v. SCHULTZ.

(Circuit Court of Appeals, Sixth Circuit. November 16, 1909.)

No. 1,922.

1. Trial (§ 143*)—Questions for Jury—Conflicting Evidence.

Where the question whether the watchman at a railroad crossing lowered the gates while a certain train was passing might have had a bearing on a case on trial, and the watchman's testimony was contradictory, the question was one for the jury.

[Ed. Note.—For other cases, see Trial, Cent. Dig. §§ 342, 343; Dec. Dig. § 143.*]

2. Railroads (§ 328*)—Accidents at Crossing—Contributory Negligence.

Plaintiff was driving with a load of lumber over the tracks at a street crossing of defendant's railroad, when the wagon was struck by a passing engine and he was injured. There were six tracks, and on the outside track, which was the second from that on which he was struck, cars

were standing, which obstructed the view. There were gates at the crossing in charge of a watchman, which were up when plaintiff drove in; but whether they were closed when a train passed, just prior to that, or whether, if not, plaintiff observed the fact, was left uncertain by the evidence. Plaintiff was familiar with the crossing and knew it was dangerous. *Held*, that it was his duty to stop and listen before driving on the through track, where he was struck, if his view was so obstructed that he could not see, and that in failing to do so, and in driving on the track without exercising any care whatever to ascertain whether a train or engine was approaching, he was guilty of contributory negligence.

[Ed. Note.—For other cases, see Railroads, Cent. Dig. §§ 1057–1070; Dec. Dig. § 328.*]

In Error to the Circuit Court of the United States for the Northern District of Ohio.

Action by August F. Schultz, guardian of John Balke, against the Erie Railroad Company. Judgment for plaintiff, and defendant brings error. Reversed.

I. T. Siddall, for plaintiff in error.

R. B. Newcomb, for defendant in error.

Before LURTON, SEVERENS, and WARRINGTON, Circuit Judges.

SEVERENS, Circuit Judge. The defendant in error brought this action as guardian for John Balke, who is alleged to be insane, against the Erie Railroad Company, to recover damages for an injury to his ward, resulting from the negligence of that company in failing to close its gates at a street crossing in the city of Cleveland, or otherwise give him warning of an approaching engine when he was attempting to cross its tracks. The case was tried before a jury, and there was a verdict and judgment for the plaintiff.

The circumstances of the case appear to be these: The tracks of the company at the place where the accident and injury happened run approximately east and west. The street called Broadway, on which Balke was traveling, runs nearly north and south, slightly diagonally. There were gates on the north and on the south sides of the tracks, of which there were six in number, which were raised and lowered by a watchman in a tower near by, in order to prevent persons using the street from coming upon the tracks while trains or locomotives without trains were passing or about to pass over the crossing. About midday of November 5, 1906, Balke, a fairly intelligent man, about 55 years of age, familiar with the locality, was driving a two-horse wagon heavily loaded with lumber, coming from the south and proceeding across the tracks to the north. Shortly before he got to the railroad, a freight train passed through going east. The gates were up when Balke came to the track. A string of freight cars was standing at his right on the south track, which was used as a dead or storage track. He passed over that track, and over the one north of it, on which the freight train passed east, and was going over the next one, which was the main line for west-bound trains, when his wagon was struck in the rear wheel by an engine backing down from the

east. Balke, who was sitting on the load, with his legs hanging over to the east, was thrown over his load to the ground, falling upon his back, and receiving a severe injury at the back of his head. It was several months before he got about, and ever since the accident he has given indications of physical impairment, and also of serious mental disturbance, on account of which the plaintiff was appointed his guardian.

It is not questioned that the gates were standing up, and that no warning was given Balke as he came upon the railroad. The negligence of the company is beyond doubt. The matters of controversy relate to the question of contributory negligence on the part of Balke. It seems clear from the record that he drove upon the tracks, and that he continued to advance, absorbed in meditation, until his horses were almost up to the track on which the engine was coming from the east, if they were not already upon it, when he was aroused to his peril by the shout of a man near by coming from the north. He then looked first one way and then the other, lashed his horses with his whip, and got partly over. It is urged in his exoneration that he had a right to assume that the way was clear from the fact that the gates were up, and that his view to the east was obstructed by the cars standing on the storage or dead track.

Before we take up the question which we shall mainly consider, it is necessary to state some further facts. The watchman who operated the gates from the tower testified that while the freight train was passing east he took a bucket and went down the ladder for some coal, and when he was part way up the ladder, returning, he became alarmed, and going up quickly saw Balke's peril, and called out to him to stop, which Balke did not do, because, as the witness thought, he did not hear him. His testimony as to whether he put down the gates for the freight train was conflicting. At one time his testimony indicated that it was improbable, if not impossible, that he put them down. At another he affirmed the contrary. It was his duty to have put the gates down, and his testimony that he did so was self-serving. It was a question for the jury to determine what was the right inference to be drawn. The court construed all of his testimony upon that point to mean that he put the gates down for the freight train and lifted them afterwards. But, as we have said, it was a question for the jury to settle.

Upon this subject counsel for the defendant below requested the court to instruct the jury as follows:

"(4) If you find from the evidence introduced in this case that just before the accident a train passed on the tracks, and that the gates were not lowered while such train passed, and that this occurred in the presence of Balke, then he would have noticed that the gates were not being operated, and would have no right to rely upon them; and if his view of the track as he approached it was so obscured by cars standing upon the side track that his vision could be of no service in enabling him to know of the approach of a train, then it was his duty to listen for the train, and, if necessary, because of the noise of his wagon or the noise of the train which had just passed, then he should have stopped to listen before driving upon the crossing; and if you find that he would not have been injured, but for his failure so to do under such circumstances, then plaintiff cannot recover, and your verdict should be for the defendant.

"(5) If Balke knew that the gates were not lowered for a train that passed on the east-bound track, then it became his duty to use all reasonable precautions for his own safety, in light of the fact that they were not in use; and such care required that he shall look for an approaching train or engine, and, if he could have seen the engine in time to have avoided the collision, had he looked, he was himself negligent, which would preclude him or his guardian from recovery."

If the facts were as assumed in these requests, particularly the fifth, it would take away the ground for the assumption by Balke that the way was clear because the gates were up; for he would have known that they were not being operated, and therefore that he must look out for himself. The situation was practically the same as if there were no gates there. And in that case his heedlessness was so gross, when he should have been alert and watchful, that the imputation of negligence would be unavoidable. The place was one of grave danger. Trains and engines running light were frequently passing to and fro. He had a heavy load, which could not be quickly moved out of the way. True, there was a string of cars standing on the dead track, which for a time would obscure his view to the east. Whether he could have seen the engine in time to have stopped after passing that obstruction soon enough to have avoided the danger is in fair doubt. It seems from the record probable, but not certain, that he could. If he could not, it was his duty to stop and listen. But he took no care whatever. His conduct was the same as if there had been no railroad crossing there. Apparently he assumed that, the gates being up, he had no need to watch. That it is incumbent on one crossing a railroad, who cannot, on account of obstructions, look along the track, to stop, if necessary, to listen, has been often held.

In the case of Shatto v. Erie Railroad Co., 121 Fed. 678, 59 C. C. A. 1, where a string of cars prevented Shatto from looking along the track of a railroad crossing a city street, Judge Day, delivering the opinion of this court, said:

"Once through the opening by a horse's length, and he was practically upon the main track, with no probable means of escape from death or injury. He could see nothing, and a strong wind from the south was blowing up the track, and carrying the sound of any approaching train from the north away from him. Under such circumstances, he was bound to use the only sense which could help him to avoid danger with the more vigilance."

Judge Thayer used similar language in delivering the opinion of the Circuit Court of Appeals for the Eighth Circuit in Chicago, etc., R. R. Co. v. Pounds, 82 Fed. 217, 27 C. C. A. 112, where he said:

"A railroad track is in itself a warning of danger, because trains may be expected at any moment. Therefore the courts have repeatedly declared that a person is as a matter of law guilty of contributory negligence, if he drives upon a crossing without making a vigilant use of his senses of sight and hearing. If either of these senses is impaired, or for any reason cannot be exercised to advantage, he ought to be the more vigilant in the use of the other."

In Chicago & N. W. Ry. Co. v. Andrews, 130 Fed. 65, 72, 64 C. C. A. 399, several other cases are cited where the same rule was applied to like conditions. And in the case of McCann v. Chicago, M. & St. P. Ry. Co., 105 Fed. 480, 44 C. C. A. 566, it was said by the

Court of Appeals for the Seventh Circuit of the negligence of the plaintiff in such circumstances that:

"If he could not hear, he was under all the more obligation to use the senses he had."

There can be no doubt that it is the generally accepted rule of decision. Exceptional circumstances may exist in which it may be less strict, as in the case of C., N. O. & T. P. R. Co. v. Farra, 66 Fed. 496, 13 C. C. A. 602, where a woman was driving down through a deep cut upon a railroad with two small children, one of them in her lap, in a carriage, at a time when she knew no regular trains were passing, and was struck and injured by a special train moving 40 or 50 miles an hour. She could not see the train until she got down to within a few feet of the track. She had not stopped, but she was attentive to the situation, and had been listening to hear any passing train, and her horse was walking. We sustained a judgment for the plaintiff; but we recognized the general rule, Judge Lurton, who delivered the opinion, saying:

"The general rule would, of course, demand that a vigilant use should be made of the eye in looking and of the ear in hearing. The failure to exercise these faculties by one approaching a crossing would be such a departure from the observance of that degree of caution exercised by prudent persons at such crossings, as to raise, under ordinary circumstances, an inference of negligence, about which reasonable men would not disagree."

Thus far we have considered the case upon the assumption that there was evidence from which the jury might have found that the gates had not been put down for the freight train going east, and that Balke knew this; and upon that state of facts, we have held that he was not entitled to recover. The learned judge assumed the facts to be otherwise, and charged the jury as if the facts were established according to his understanding. He said:

"What was the conduct of Balke, under all the circumstances and conditions that surrounded him as he was crossing those tracks? The open gates were an invitation to him of safety. As I said a moment ago, that does not mean that he must not use his faculties to discover whether there is danger or not; but it does mean that he is in a different position, that his mind is less charged with a sense of danger, than occurs when a person approaches a railroad crossing at which there are not gates and a gateman."

Upon the question whether the court should have instructed the jury that the plaintiff was not entitled to recover because of his own negligence, a majority of the court are of opinion that the judge would not have been justified in taking that course. This view is induced largely by the fact that the record does not show with sufficient clearness whether Balke could have seen the approaching engine for a sufficient time after he had passed the obstruction and got a view to the east to have enabled him to stop before he drove upon the track. As upon a new trial the situation may be more definitely shown, we forbear further discussion of this aspect of the case.

The judgment must be reversed, and a new trial awarded.

(173 Fed. 737.)

UNION PACIFIC COAL CO. v. UNITED STATES.

(Circuit Court of Appeals, Eighth Circuit. November 19, 1909.)

Nos. 3,077–3,081.

1. MONOPOLIES (§ 12*) — ANTI-TRUST ACT — TEST OF "UNLAWFUL COMBINATION."

The test of an "unlawful combination" under Act July 2, 1890, c. 647, § 1, 26 Stat. 209 (U. S. Comp. St. 1901, p. 3200), is its necessary effect upon free competition in commerce among the states or with foreign nations.

A combination, the necessary effect of which is to stifle, or directly and substantially to restrict, such competition, is unlawful under that act.

But if the necessary effect of a combination is but incidentally and indirectly to restrict competition, while its chief result is to foster the trade and increase the business of those who make and operate it, it does not fall under the ban of this law.

[Ed. Note.—For other cases, see Monopolies, Cent. Dig. § 10; Dec. Dig. § 12.*

For other definitions, see Words and Phrases, vol. 2, pp. 1275, 1276; vol. 8, p. 7606.]

2. MONOPOLIES (§ 17*)—ANTI-TRUST ACT—VENDORS NOT FORBIDDEN TO FIX PRICES AND TERMS OF SALE OF COAL THEREBY.

A coal company engaged in mining and selling its coal is not prohibited by the anti-trust act (Act July 2, 1890, c. 647, § 1, 26 Stat. 209 [U. S. Comp. St. 1901, p. 3200]), or by the law, from refusing to sell its coal, from selecting its customers, from fixing the price and terms on which it will sell its product, or from selling to different customers for different prices and on different terms.

[Ed. Note.—For other cases, see Monopolies, Cent. Dig. § 13; Dec. Dig. § 17.*]

3. CORPORATIONS (§ 280*) — CRIMES — STOCKHOLDERS — GUILT OF CORPORATION NOT IMPUTED TO STOCKHOLDER.

A violation of a law by a corporation does not render its nonparticipating stockholders criminally liable therefor.

[Ed. Note.—For other cases, see Corporations, Cent. Dig. § 1186; Dec. Dig. § 280.*]

4. CRIMINAL LAW (§§ 741, 1159*)—SUFFICIENCY OF PROOF—EVIDENCE OF GUILT MUST EXCLUDE EVERY OTHER HYPOTHESIS—APPEAL.

Unless there is substantial evidence of facts which exclude every other hypothesis but that of guilt, it is the duty of the trial court to instruct the jury to return a verdict for the accused.

And where all the substantial evidence is as consistent with innocence as with guilt, it is the duty of the appellate court to reverse a judgment of conviction.

[Ed. Note.—For other cases, see Criminal Law, Cent. Dig. §§ 1713, 1727, 3074–3083; Dec. Dig. §§ 741, 1159.*]

5. MONOPOLIES (§ 31*)—EVIDENCE—CONCLUSION.

The Union Pacific Coal Company, Moore, its western sales agent, the Union Pacific Railroad Company, which owned all the stock of the coal company, the Oregon Short Line Railroad Company, and Buckingham, the superintendent of transportation of the railroad companies, were indicted and convicted for combining to restrain interstate commerce by refusing to sell coal to and to transport coal for one Sharp unless he would discontinue an advertisement of sale of coal at a reduced rate.

Held, there was no substantial evidence of any combination between any two of the defendants either to refuse to sell coal to Sharp or to refuse to transport it for him.

[Ed. Note.—For other cases, see Monopolies, Dec. Dig. § 31.*]

6. MONOPOLIES (§§ 12, 20*)—COMBINATION BETWEEN CORPORATION AND AGENT —CONSCIOUS PARTICIPATION OF TWO MINDS REQUISITE TO FORM.

A combination between a corporation and its officer or agent in violation of the anti-trust act (Act July 2, 1890, c. 647, § 1, 26 Stat. 209 [U. S. Comp. St. 1901, p. 3200]) cannot be formed by the thoughts or acts of the officer or agent alone, without the conscious participation in it of any other officer or agent of the corporation.

The union of two or more persons, the conscious participation of two or more minds, is indispensable to an unlawful combination.

[Ed. Note.—For other cases, see Monopolies, Cent. Dig. § 10; Dec. Dig. §§ 12, 20.*]

(Syllabus by the Court.)

In Error to the District Court of the United States for the District of Utah.

The Union Pacific Coal Company, the Union Pacific Railroad Company, the Oregon Short Line Railroad Company, James M. Moore, and Everett Buckingham were convicted of a violation of Act July 2, 1890, and bring error. Reversed and remanded.

C. S. Varian and N. H. Loomis (P. L. Williams, on the brief), for plaintiffs in error.

Hiram E. Booth, U. S. Atty., and William M. McCrea, Asst. U. S. Atty.

Before SANBORN and VAN DEVANTER, Circuit Judges, and WILLIAM H. MUNGER, District Judge.

SANBORN, Circuit Judge. This writ of error challenges the legality of the conviction of the Union Pacific Coal Company, a corporation of Wyoming, engaged in mining coal in that state and selling it to retail dealers in Salt Lake City and elsewhere, James M. Moore, its general Western agent, the Union Pacific Railroad Company and the Oregon Short Line Railroad Company, corporations of Utah and common carriers, and Everett Buckingham, general superintendent of the transportation business of these carriers between Green River, in the state of Wyoming, and Salt Lake City, in the state of Utah, of a violation of the act of July 2, 1890, to protect trade and commerce against unlawful restraints and monopolies, commonly called the "Sherman Anti-Trust Act." 26 Stat. 209, c. 647 (U. S. Comp. St. 1901, p. 3200).

The charge in the indictment was that about July 20, 1906, the defendants below combined to force one Sharp, a purchaser of coal from the coal company and a retail dealer therein at Salt Lake City, out of his business, to control and maintain the retail price of coal in that city, and to prevent competition in the sale of coal at retail in Salt Lake City by failing and refusing to sell and to transport to him any of the coal mined by the coal company unless he would discontinue an advertisement he had caused to be inserted in the newspapers to the effect that he would sell storage coal at a reduction of 50 cents a ton from the regular retail price thereof then prevailing in Salt Lake City, and by the refusal of the coal company and Moore to sell to Sharp any

of its coal, and of the railroad companies and Buckingham to transport any coal for him ever after July 22, 1906.

Many specifications of error in the trial are urged upon our consideration; but the most serious is that at its close the court denied the motions of each of the defendants to instruct the jury to return a verdict against the government, because there was no substantial evidence of the alleged combination of any two of the defendants. It may not be unprofitable, before entering upon a review of the evidence challenged by this specification, to call to mind some of the indisputable rules of law by which it must be decided.

The gist of the offense charged in the indictment was not the refusal of the coal company and Moore to sell coal on the purchaser's terms, or of the railroad companies and Buckingham to transport it. It was the combination so to do, and if there was no combination there was no offense. There was no law which forbade the coal company to prescribe the terms on which it would sell its product to Sharp, or to any other purchaser. There was no law which required the coal company to sell its coal to Sharp on the terms which he prescribed, or to sell it to him at all. It had the undoubted right to refuse to sell its coal at any price. It had the right to fix the prices and the terms on which it would sell it, to select its customers, to sell to some and to refuse to sell to others, to sell to some at one price and on one set of terms, and to sell to others at another price and on a different set of terms. There is nothing in the act of July 2, 1890, which deprived the coal company of any of these common rights of the owners and venders of merchandise, and if it did not combine with some other person or persons so to do its refusal to sell its coal to Sharp unless he would withdraw his advertisement of a reduction in his retail price of it was not the violation of the Sherman anti-trust act charged in the indictment. Morris Run Coal Co. v. Barclay Coal Co., 68 Pa. 173, 186, 8 Am. Rep. 159; Whitwell v. Continental Tobacco Co., 125 Fed. 454, 460, 461, 463, 60 C. C. A. 290, 296, 297, 299, 64 L. R. A. 689; 1 Eddy on Combinations, § 292; Allgeyer v. Louisiana, 165 U. S. 578, 589, 17 Sup. Ct. 427, 41 L. Ed. 832; In re Greene (C. C.) 52 Fed. 104, 115; In re Grice (C. C.) 79 Fed. 627, 644; Walsh v. Dwight, 40 App. Div. 513, 58 N. Y. Supp. 91, 93; Brown v. Rounsavell, 78 Ill. 589.

A corporation is a person, within the meaning of this act. It is another and different person from any of its stockholders, whether they are corporations or individuals; and no corporation can, by violating a law, make any one of its stockholders who does not himself participate in that violation criminally liable therefor.

The act of July 2, 1890, does not denounce every combination to engage in or to conduct commerce among the states or with foreign nations, but those combinations alone which restrain that commerce. It does not denounce every combination which restrains that commerce, but those combinations only, the necessary effect of which is to stifle, or directly and substantially to restrict, free competition in that commerce. United States v. Trans-Missouri Freight Ass'n, 166 U. S. 290, 330, 339, 340, 17 Sup. Ct. 540, 41 L. Ed. 1007; Addyston Pipe & Steel

Co. v. United States, 175 U. S. 211, 234, 20 Sup. Ct. 96, 44 L. Ed. 136; United States v. Joint Traffic Ass'n, 171 U. S. 505, 576, 577, 19 Sup. Ct. 25, 43 L. Ed. 259; United States v. Northern Securities Company (C. C.) 120 Fed. 721, 722.

If the necessary effect of a combination to engage in or conduct interstate or international commerce is but incidentally and indirectly to restrict competition therein, while its chief result is to foster the trade and to increase the business of those who make and operate it, it does not fall under the ban of this law. Hopkins v. United States, 171 U. S. 573, 592, 19 Sup. Ct. 40, 43 L. Ed. 230; Anderson v. United States, 171 U. S. 604, 616, 19 Sup. Ct. 50, 43 L. Ed. 300; United States v. Joint Traffic Ass'n, 171 U. S. 505, 568, 19 Sup. Ct. 25, 43 L. Ed. 259; Addyston Pipe & Steel Co. v. United States, 175 U. S. 211, 245, 20 Sup. Ct. 96, 44 L. Ed. 136; Whitwell v. Continental Tobacco Co., 125 Fed. 454, 458, 60 C. C. A. 290, 294, 64 L. R. A. 689, and cases there cited. There are lawful and unlawful combinations of persons conducting interstate and international commerce, and undoubtedly the former vastly outnumber the latter. There is no presumption that two or more persons who have combined to conduct interstate or international commerce are guilty of a combination in restraint of that commerce.

There was a legal presumption that each of the defendants was innocent until he was proved to be guilty beyond a reasonable doubt. The burden was upon the government to make this proof, and evidence of facts that are as consistent with innocence as with guilt is insufficient to sustain a conviction. Unless there is substantial evidence of facts which exclude every other hypothesis but that of guilt, it is the duty of the trial court to instruct the jury to return a verdict for the accused; and where all the substantial evidence is as consistent with innocence as with guilt, it is the duty of the appellate court to reverse a judgment of conviction. Vernon v. United States, 146 Fed. 121, 123, 124, 76 C. C. A. 547, 549, 550; United States v. Richards (D. C.) 149 Fed. 443, 454; Hayes v. United States (C. C. A.) 169 Fed. 101, 103;[1] United States v. Hart (D. C.) 78 Fed. 868, 873, affirmed in Hart v. United States, 84 Fed. 799, 28 C. C. A. 612; United States v. M'Kenzie (D. C.) 35 Fed. 826, 827, 828; United States v. Martin, 26 Fed. Cas. 1183, 1184 (No. 15,731); People v. Ward, 105 Cal. 335, 341, 38 Pac. 945; People v. Murray, 41 Cal. 66, 67; State v. Hunter, 50 Kan. 302, 32 Pac. 37; Bradshaw v. State, 17 Neb. 147, 22 N. W. 361, 366.

We turn to an examination of the evidence in the light of these principles. The defendants naturally divide themselves into two groups, the railroad companies and Buckingham, and the coal company and Moore. There is no evidence that either of the railroad companies or Buckingham ever combined with any one to fail or to refuse, or ever failed or refused, to transport any coal or other merchandise which Sharp offered to any of them for transportation or requested any of them to carry, so that the only question regarding them is whether or not there was substantial evidence that any of them unlawfully combined with the coal company, or with Moore, its Western sales agent, to refuse to sell the product of the coal company to Sharp.

[1] 94 C. C. A. 449.

There had been times in winter when the demand for coal in Salt Lake City had been so great that it was impossible for the coal companies and the railroad companies to supply it, and in the summer of 1906, for the purpose of getting as large a portion of the supply for the coming winter into the city in the summer as possible, so that the demand in the winter might not cause a coal famine, as it had done at other times, the coal companies arranged to sell coal which should remain stored with the retail dealers, or with their customers, on August 31, 1906, at a price 25 cents below the regular price for coal sold for general consumption, and the two railroad companies arranged to and did offer a rate of transportation from the mines in Wyoming to Salt Lake City for such stored coal 25 cents lower than the rate on coal sold for general consumption. It had long been, and then was, the practice of the railroad companies bringing coal into Salt Lake City from the mines to collect from the dealers in that city who purchased it both the purchase price of the coal and the freight, to pay over the purchase price to the coal companies which sold it, and to distribute the freight among the carriers that earned it. The reduction on storage coal was to be paid to the purchasers after August 31, 1906, upon proof that the coal remained in store on that day; but the purchasers were charged, and the railroad companies collected in the first instance, the regular price for coal sold for consumption upon all the coal they brought into the city for the coal companies. The reduction in the price was to be refunded after August 31, 1906, upon suitable proof.

The Union Pacific Coal Company had many competitors that were mining coal, selling it, and shipping it to dealers in Salt Lake City, among them four companies which were shipping coal into the city over the Union Pacific Railroad and the Oregon Short Line Railroad. The Union Pacific Railroad Company owned all the stock and a majority of the bonds of the coal company; but Buckingham and the other officers of that company, and of the Short Line Company, at Salt Lake City, bore no official relation to the coal company and they testified that they had no authority over its sales agent, Moore. The general manager of the coal company was one Clark, and his office was at Omaha. He was Moore's superior officer, and he had fixed the coal company's selling price of storage coal by written order. The regular retail price in Salt Lake City was $5.25 per ton, and the retail dealers, including Sharp, had been and were selling all coal at that price, when on July 17, 1906, Sharp published a notice in the newspapers of the city that he would sell coal for storage at $4.75 per ton. Gridley, the manager of another coal company which was shipping coal into the city and selling it, protested to Sharp and to Moore, and notified the latter that his company would reduce the retail price to $4.25 per ton and keep it there all winter unless that advertisement was discontinued. On July 17th Moore asked Sharp to discontinue this advertisement, and told him that the coal company would not sell him any more coal unless he did so. Sharp refused so to do, and on July 18, 1906, Moore stopped shipments of coal to him from the mines of the coal company. On July 20, 1906, Sharp complained to Bancroft, the general manager of the two railroads which brought the coal to the

city, and the latter directed Buckingham, the superintendent of transportation, to investigate the matter. Buckingham called Moore, and talked the matter over with him and Sharp. The latter testified that he told Moore and Buckingham that he had had an understanding with some one other than Moore, who represented him in his absence, to the effect that he might advertise sales of storage coal at $4.75 per ton, and that he would not take the advertisement out;

"that finally Mr. Buckingham asked what I was to do—no, Mr. Moore said—one of his arguments was that Mr. Gridley had threatened this extra 50 cents cut unless I was forced to take it out of the paper, and that they knew he would do it, and would stay with it—he had done it at some other point—and they all agreed that they could not stand anything of that sort, and that I would have to take it out. I refused to do it, and they wanted to know what I would do. I told them I would go out of business first. Q. What did Mr. Buckingham say to you? A. That is what he said to me—asked me; that is one of the things. Q. What else did he say? A. Then he said he was very sorry that I couldn't see it in their light. Q. What did he say about your getting coal in case you did not do as he asked? A. They simply said, if I didn't take the advertisement out of the paper, I wouldn't get coal. Q. Who said that? A. I think Mr. Buckingham. Q. Had Mr. Moore said anything about that before or after? A. In this conversation? Q. Yes. A. Yes, sir; practically the same thing."

He further testified that Buckingham "agreed with Moore that I could not get any more coal"; that he—

"told me I would have to take it out of the paper, and what would I do if I didn't get the coal. I told him I would go out of business first. He, Mr. Buckingham, told me he was awfully sorry that I could not come to their views—not his view; their view."

He testified that he never tried to get any coal after that, that he could not get any coal of the other coal companies, that he sold all the coal he had, and went out of business. He also testified that his understanding was that Moore did as Bancroft told him, that he had had it work that way, that when he could not get coal from Moore he complained to Bancroft and got it, that he thought Bancroft controlled the railroad deliveries, and that Moore had nothing to do with the railroads. And finally he testified in this way:

"Q. Mr. Bancroft is the general manager of the Oregon Short Line Railroad Company, and he has nothing to do with Mr. Moore has he? A. Yes. Q. What? A. What? Nothing official, except, if he asks Mr. Moore to do a thing, I think he will do it. Before he did it."

Moore testified that he stopped the sales to Sharp on July 18, 1906, because the latter would not withdraw his advertisement of the reduced price; that he did this without any understanding or agreement with Bancroft or Buckingham, or any other officer of either of the railroad companies, or any officer of the coal company, or anybody else; that at the meeting on July 20th he and Sharp stated their positions, and then Buckingham said to Sharp:

"I am just coming between you and Mr. Moore. I haven't anything to do with it, but I think you are in the wrong. If I were you I would get in line, and do business as other coal dealers do."

That neither he nor Buckingham told Sharp at that meeting that he could not get any more coal unless he took his advertisement out

of the papers; that he never made any agreement with Buckingham or any one, at or after the meeting of July 20th, not to sell Sharp any more coal; that he heard, but did not know, that the Union Pacific Railroad Company owned and controlled the coal company, but that he did not mean by that that it owned or controlled it in any other way than by the ownership of the stock; that the business of the coal company in selling and shipping coal was entirely distinct from that of the railroad companies; that the railroad companies bought coal of the coal company and paid for it in the same way that they bought coal of other coal companies and paid them for it; that all the business of the coal company, except its sales, was in Wyoming; and that it had its own general manager and superintendent.

Buckingham testified that he had no control of or authority over Moore; that at the meeting of July 20th Sharp and Moore stated their positions, and Moore said Sharp's orders had been held up, and shipments would not be resumed until Sharp's advertisement was discontinued; and that he (Buckingham) told Sharp he could not do anything for him, and that he thought he was standing in his own light. He also testified that he never told Sharp that unless he took the advertisement out of the paper he could get no more coal, that the reason why he could do nothing for Sharp was that it was not a transportation matter and he had no authority, and that he thought it was understood that the Union Pacific Railroad Company controlled the coal company. Bancroft testified that he was the general manager of the Oregon Short Line Railroad Company and of the Union Pacific Railroad Company west of Green river, that he never had any jurisdiction or control of any of the officers of the coal company, that he took it that the Union Pacific Railroad Company controlled the coal company, and that he had no authority over Moore. There was no other evidence material to the issue whether or not the defendants were parties to an unlawful combination not to sell coal to Sharp.

What was there in any of this evidence inconsistent with the absence of such a combination by Buckingham and the railroad companies? The counsel for the government answer: (1) The fact that the storage rate and the reduction in the price of coal and of the freight charges were announced by joint circulars issued by the railroad companies; but this method of announcement was perfectly consistent with the independent action of the coal company, for the railroad companies collected the price of all the coal brought into the city for the coal companies, as well as the freight which the railroad companies earned. (2) The fact that the price of the coal and the freight were collected by the Oregon Short Line Company; but it had been for years, and then was, the custom for the terminal railroad company at Salt Lake City to collect the price of coal delivered for all the vendor companies, and it is hardly probable that all those companies had long been in a combination not to sell coal to Sharp. (3) The fact that both railroad companies were operated by the same set of officials, and that they paid to all dealers the agreed refund on coal held in storage on August 31, 1906; but there is nothing in this fact to indicate that they combined to stop the sale of coal by the coal company to Sharp, for they refunded

to him in the same way as to others. (4) The fact that by Bancroft's direction Buckingham investigated the disagreement between Moore and Sharp two days after the former had stopped selling and shipping coal to Sharp, and the statement of Sharp, which was contradicted by Moore and Buckingham, that the latter told Sharp that unless he took the advertisement out of the newspapers he would not get any more coal, and that he was awfully sorry he could not come to their view; but there is nothing in this investigation, or even in this statement, inconsistent with the theory that Buckingham and Bancroft had no authority to control or direct Moore's action, that Buckingham's investigation was inspired by the interest of the railroad companies in the freight they might earn, and that there was no combination between them and Moore relative to the latter's refusal to sell or ship coal to Sharp. (5) The fact that Sharp had sometimes applied to Bancroft for coal, and had secured it, when he could not get it of Moore; but that fact is consistent with the absence of any control over Moore in Bancroft, for the latter testified, and this testimony was not contradicted, that he did not know of a coal dealer in Salt Lake City that he had not caused the railroad companies to purchase coal for and to divert it to, when such dealer was short. (6) The fact that Bancroft, Buckingham, and Moore testified that they understood that the Union Pacific Railroad Company owned and controlled the coal company; but the evidence is undisputed that it owned the stock of the coal company. It did, therefore, own and control it in one sense, and there is no evidence that it owned or controlled it in any other way. There is no substantial evidence that either Bancroft or Buckingham had any authority or control over Moore or his sales, and a stockholder of a corporation does not become criminally liable for a combination made by the corporation without conscious participation therein.

From this review of the evidence and of the argument of the counsel for the government, the fact appears that there was no substantial evidence in this case inconsistent with the innocence of Buckingham and the railroad companies, while there was plenary proof that they were not guilty; for the evidence is conclusive and undisputed that the coal company, through Moore, its agent, refused to sell coal to Sharp and stopped shipments to him two days before Bancroft, or Buckingham, or the railroad companies, knew it. They could not have combined to make that refusal and to prevent the sales of the coal after the refusal had been made and the prevention had been effected, and under the evidence they had no power to change the policy and course of the coal company and to compel it to sell coal to Sharp, save by a vote of its stock by the Union Pacific Company at a succeeding annual election for a board of directors that would pursue such a course. The motion to instruct the jury to return a verdict in favor of Buckingham and the railroad companies should have been granted.

There remain for consideration the coal company and Moore. For the reasons which have been stated, the evidence was insufficient to sustain a conviction of either of them of an unlawful combination with Buckingham or with either of the railroad companies. But counsel for the government argue that the testimony is sufficient to convict them of combining each with the other, and they cite United States v.

MacAndrews & Forbes Co. (C. C.) 149 Fed. 831, 832, in which an indictment of two corporations and their presidents for a combination in violation of the anti-trust act was sustained against the officers, not on the ground that an unlawful combination of either of them with his corporation could be made by his act as an officer of the corporation without the assent or knowledge of any other officer or agent thereof, but on the ground that the corporation might have done some things and the individuals other things which were utterly different, and yet all these things might dovetail together and produce an unlawful combination; People v. Detroit White Lead Works, 82 Mich. 471, 46 N. W. 735, 737, 9 L. R. A. 722, a prosecution for creating and maintaining a nuisance; Overland Cotton Mill Co. v. People, 32 Colo. 263, 269, 75 Pac. 924, 105 Am. St. Rep. 74, a prosecution for employing a child under 12 years of age; United States v. N. Y. Central & H. R. R. Co. (C. C.) 146 Fed. 298, 301, and N. Y. Central R. R. Co. v. United States, 212 U. S. 481, 491, 497, 29 Sup. Ct. 304, 53 L. Ed. 613, a prosecution for giving rebates—cases in which corporations and their officers were convicted, not of any combination, but of violations of specific statutory prohibitions committed by the corporations and the individuals by means of the acts of the latter within the scope of their authority as agents or officers.

But no case has been called to our attention that sustains the position that an agent of a corporation may alone form an unlawful combination between himself and his corporation by his thoughts and acts within the scope of his agency, without the knowledge or participation of any other agent or officer of the corporation. If he may, the distinction between the commission of an offense and a combination to commit it by a corporation vanishes into thin air; for a corporation can act only by an agent, and every time an agent commits an offense within the scope of his authority under this theory the corporation necessarily combines with him to commit it. This cannot be, and it is not, the law. The union of two or more persons, the conscious participation in the scheme of two or more minds, is indispensable to an unlawful combination, and it cannot be created by the action of one man alone. The plan and the act of refusing to sell coal to Sharp unless he would withdraw his advertisement were the scheme and the act of Moore as the agent of the coal company, and of Moore alone. No other agent or officer of the coal company had any knowledge of it, or gave any assent to it, and consequently the scheme and the act failed to evidence an unlawful combination between the corporation and Moore, and the motion to instruct the jury to return a verdict in their favor should have been granted also.

The judgments below must be reversed, and the case must be remanded to the court below, with directions to set aside the verdict and to grant a new trial; and it is so ordered.

(173 Fed. 895.)

VAN SICE v. IBEX MINING CO.

(Circuit Court of Appeals, Eighth Circuit. October 15, 1909.)

No. 2,894.

1. MINES AND MINERALS (§ 23*)—ACQUISITION OF MINING CLAIMS—FORFEITURE OF INTEREST FOR FAILURE TO CONTRIBUTE TO ASSESSMENT WORK.

The provision of Rev. St. § 2324 (U. S. Comp. St. 1901, p. 1426), for the extinguishment of the interest of a co-owner in a mining claim for his failure to contribute to the assessment work required thereby, is constitutional and valid.

[Ed. Note.—For other cases, see Mines and Minerals, Cent. Dig. § 58; Dec. Dig. § 23.*

Mining partnerships, see note to G. V. B. Mining Co. v. First Nat. Bank of Hailey, 35 C. C. A. 515.]

2. MINES AND MINERALS (§ 23*)—DEFAULT IN ASSESSMENT WORK—FORFEITURE.

A forfeiture will be enforced in a court of equity, when such relief accords more with the principles of right and justice than would the denial thereof; and this rule is particularly applicable to a forfeiture of the interest of a co-owner in a mining claim, expressly provided for by Rev. St. § 2324 (U. S. Comp. St. 1901, p. 1426), for his failure to contribute to the work of development required thereby as a matter of public policy.

[Ed. Note.—For other cases, see Mines and Minerals, Dec. Dig. § 23.*]

3. MINES AND MINERALS (§ 23*)—MINING CLAIMS—FORFEITURE OF INTEREST FOR FAILURE TO CONTRIBUTE TO ASSESSMENT WORK—SUFFICIENCY OF NOTICE.

The beneficial owners of part interests in a mining claim are the proper parties to give the notice to a co-owner, under Rev. St. § 2324 (U. S. Comp. St. 1901, p. 1426), to forfeit his interest for a failure to contribute to assessment work, although they have conveyed their interests in trust.

[Ed. Note.—For other cases, see Mines and Minerals, Dec. Dig. § 23.*]

4. MINES AND MINERALS (§ 34*)—MINING CLAIMS—PATENTS—ESTOPPEL.

It is a common and approved practice to obtain patents from the government to mining claims in the names of the original locators, without regard to intervening changes in right or ownership, and the fact that a corporation grantee of certain owners proceeded upon an application made by prior owners, and obtained a patent running to them or their heirs and assigns, does not estop it from asserting that the interest of one of such patentees had been forfeited under the statute and vested in its grantors prior to the patent.

[Ed. Note.—For other cases, see Mines and Minerals, Dec. Dig. § 34.*

Conclusiveness of patents for mining claims, see notes to Carson City Golf & Mining Co. v. North Star Mining Co., 28 C. C. A. 346; Bunker Hill & Sullivan Mining & Concentrating Co. v. Empire State-Idaho Mining & Developing Co., 48 C. C. A. 674.]

Appeal from the Circuit Court of the United States for the District of Colorado.

Suit in equity by the Ibex Mining Company against C. L. Van Sice. Decree for complainant, and defendant appeals. Affirmed.

Edwin H. Park, for appellant.

Charles J. Hughes, Jr. (Charles Cavender, on the brief), for appellee.

Before VAN DEVANTER, HOOK, and ADAMS, Circuit Judges.

HOOK, Circuit Judge. C. L. Van Sice brought an action in ejectment against the Ibex Mining Company to recover an interest in the San Jose lode mining claim in Lake county, Colo. The company, claiming to have equitable defenses, filed its bill in equity to avail itself of them and to enjoin the action at law. This appeal was taken by Van Sice from a decree sustaining the bill.

The mining claim once belonged to John W. Gordon, J. B. Bissell, and John P. Van Sice. The appellant asserts ownership of the interest which belonged to the latter, as his son and sole heir. In 1888 Gordon and Bissell caused to be published in a newspaper a notice to their co-owner, Van Sice, that they had paid for the work on the mine for the preceding year, necessary under the law for the preservation of the claim, and demanding contribution from him on the penalty of the forfeiture of his interest. This was done under the provisions of section 2324, Rev. St. (U. S. Comp. St. 1901, p. 1426). Van Sice did not contribute. Thereafter the title of Gordon and Bissell passed by conveyances to the mining company, which subsequently secured a patent for the entire claim in the names of the three men who owned it in 1880, one of whom was appellant's father. Section 2324, Rev. St., provides among other things that:

"Upon the failure of any one of several co-owners to contribute his proportion of the expenditures required hereby, the co-owners who have performed the labor or made the improvements may, at the expiration of the year, give such delinquent co-owner personal notice in writing or notice by publication in the newspaper published nearest the claim, for at least once a week for ninety days, and if at the expiration of ninety days after such notice in writing or by publication such delinquent should fail or refuse to contribute his proportion of the expenditure required by this section, his interest in the claim shall become the property of his co-owners who have made the required expenditures."

Appellant contends that the proceeding under this provision of the statute did not extinguish his father's interest in the claim, for the reasons that the provision is contrary to the fifth amendment to the Constitution, in that it does not afford due process of law; that, if the requirement to do annual labor upon unpatented mining claims is a condition subsequent, such condition cannot be reserved by the government to be enforced by a third person; that it does not provide any evidence of title or transfer thereof, nor any method of recording or proving it; that it is a delegation of judicial power; that the title to an unpatented mining claim is a vested interest, which is not destroyed by the mere failure to do the work; and, finally, that the statute is an invasion of the rights of the state to regulate the tenure of private property within its borders. These contentions are so clearly wanting in merit that a detailed consideration of them is unnecessary. The mineral lands were the property of the government, and for the disposal of them it was competent for Congress to prescribe such conditions as in its judgment were required by a wise public policy. The section of the statute providing for the extinguishment of the interest of a co-owner for his failure to contribute to the work of exploration and development is part of the very law upon which he is compelled to rely for the source of his title—for the existence of any right whatever. He cannot well claim a vested interest, freed from the statutory conditions which qualify it.

The right and its limitations go together. There can be no real question about the effect of a notice rightly published under section 2324. Elder v. Horseshoe Mining & Milling Co., 194 U. S. 248, 24 Sup. Ct. 643, 48 L. Ed. 960.

It is also contended that a court of equity will not aid in enforcing a forfeiture; but that is not invariably true. The rule is that a forfeiture will be enforced in a court of equity, when such relief accords more with the principles of right and justice than would the denial thereof. Brewster v. Lanyon Zinc Company, 140 Fed. 801, 72 C. C. A. 213; Lindeke v. Associations Realty Co., 146 Fed. 630, 77 C. C. A. 56. There is the more reason for it in a case like the present, where the duty imposed by the statute upon a co-owner is not alone to his associates, but is also because of considerations of the common welfare. It is of public importance that the mineral resources of the country be explored and developed, and not left in indolent or indifferent hands. The policy exhibited in the statute would be ill subserved if, in the annual performance of labor and making of improvements, a co-owner of an unpatented claim might safely refuse or neglect to co-operate or contribute.

Again, it is argued that Bissell and Gordon, who signed the notice of forfeiture, were not co-owners within the meaning of the statute. We think they were. True, their interests had been conveyed to a trustee upon an adjustment of conflicting neighboring claims; but theirs was the beneficial ownership, and it was their duty and right to protect the title.

The mining company alleged in its bill that it had been in the open, continuous, exclusive, and adverse possession of the claim for more than seven years prior to the action in ejectment, and in reliance upon full ownership, and with the knowledge and consent of John P. Van Sice, it had paid the taxes and had expended large sums of money upon the property and in perfecting the title; also that neither John P. Van Sice nor the appellant made any such expenditures, nor objected to the mining company doing so. Upon this an estoppel was asserted. Appellant now says laches cannot be a ground for enjoining, in equity, an action at law, and cites Wehrman v. Conklin, 155 U. S. 314, 15 Sup. Ct. 129, 39 L. Ed. 167. But it was said in that case that laches would be considered in equity as one of the elements of an estoppel not available at law. In the case at bar, however, the decree may rest upon the extinguishment of the Van Sice interest by the proceeding under the act of Congress, irrespective of laches or estoppel. It should be said in this connection that the mining company interposed that proceeding as a defense in the ejectment action; but at the instance of the plaintiff, appellant here, the court ruled it constituted no defense in law. This was evidently upon the ground that, the mining company having afterwards procured a patent in the names of John P. Van Sice and his associates, the defense was cognizable only in a court of equity.

It is further claimed by the appellant that, even if his father's interest had been forfeited to Gordon and Bissell, the share Bissell took never passed to the mining company. But we think it clear that Bissell intended all his interest should be conveyed, including that former-

ly owned by John P. Van Sice, and his grantee evidently acted upon the same supposition. So far as appears, Bissell has never denied it, and he would be in no position to do so now. The appellant is certainly no better qualified to raise the question. Another claim, somewhat similar in character, relating to the interest of one Stone, who was a former owner, is not sustained by the record.

There remains but one other matter that requires attention. In 1880 John B. Stone, Henry M. Jones, and John P. Van Sice, who were the owners of the claim at that time, made application to the land office at Leadville, Colo., for a patent, but did not press it to a hearing. After the forfeiture of the Van Sice interest in 1888 to Gordon and Bissell, his then co-owners, and after the conveyances to the mining company in 1893 and 1894, the latter entered the claim for patent in the names of the original applicants, and received a patent running to them, their heirs and assigns. Upon this it is claimed the mining company is estopped from asserting the forfeiture proceedings and from disputing the continued existence of the Van Sice interest. It is common practice to obtain patents from the government in the names of the original locators or entrymen, without regard to intervening changes in right or ownership. The patents generally run to the grantees named and their legal representatives, or, as in the case here, "their heirs and assigns," and the question to whose benefit the title should inure is left open in the courts. Hogan v. Page, 2 Wall. 605, 17 L. Ed. 854. The practice was in view of the difficulty and the burden that would be imposed on the land office of inquiring into and determining derivative titles. The claim of the mining company to the Van Sice interest under the forfeiture proceedings was not in issue before the land office, and was not one of the things necessary to be determined before the granting of a patent. Turner v. Sawyer, 150 U. S. 578, 587, 14 Sup. Ct. 192, 37 L. Ed. 1189. That Van Sice was at the time of the original application entitled to be a grantee in the patent was conceded. Whether he afterwards parted with his interest, voluntarily or involuntarily, was not inquired into when the patent was issued, and it was unnecessary to make such inquiry. The claim of the mining company to his interest was a derivative one, like that of an heir, or a grantee in a deed voluntarily executed, or in a deed made by a sheriff on execution sale. Landes v. Brant, 10 How. 348, 13 L. Ed. 449; Carpenter v. Rannels, 19 Wall. 138, 22 L. Ed. 77; De La Vergne Machine Co. v. Featherstone, 147 U. S. 209, 223, 13 Sup. Ct. 283, 37 L. Ed. 138. Indeed, so far as concerns the question here, the title accruing to a co-owner by a rightful notice, under section 2324, Rev. St., is much like that conveyed by a sheriff's deed after judgment and execution sale. Each results from a default in obligation, followed by proceedings authorized by law. The case before us is distinguishable from King v. McAndrews, 111 Fed. 860, 50 C. C. A. 29, and the others cited by appellant.

The decree is affirmed.

(173 Fed. 849.)

THOMPSON CO. v. PENNEBAKER.

(Circuit Court of Appeals, Ninth Circuit. November 8, 1909.)

No. 1,700.

1. WATERS AND WATER COURSES (§ 153*)—REQUISITES OF CONTRACT—OPTION—DESCRIPTION OF PROPERTY.

A contract giving an option for the purchase of certain lands and water rights sufficiently described the same for identification, where it gave the section on which they were located, recited that the water rights had been appropriated by the seller under the law of Washington and recorded as required by such law in the county records, and further described the lands as sufficient lands "in and about said water rights" for the construction of a power house, etc.

[Ed. Note.—For other cases, see Waters and Water Courses, Dec. Dig. § 153.*]

2. WATERS AND WATER COURSES (§ 10*)—APPROPRIATION OF WATER FROM STREAM—"BENEFICIAL USE."

The development and maintenance of an electric power plant to be operated by water power is a "beneficial use" of the water, within the meaning of Ballinger's Ann. Codes & St. Wash. § 4099 (Pierce's Code, § 5139), and water previously appropriated from a stream under the statute may lawfully be applied to such purpose.

[Ed. Note.—For other cases, see Waters and Water Courses, Dec. Dig. § 10.*

For other definitions, see Words and Phrases, vol. 1, p. 749.]

3. WATERS AND WATER COURSES (§ 31*)—TRANSFER OF OPTION TO PURCHASE—CONSTRUCTION.

Plaintiff assigned to defendant a contract giving an option to purchase certain water rights and land connected therewith, under an agreement that, if defendant should "dispose of or use the said option to its benefit, directly or indirectly," it should pay plaintiff therefor the sum of $10,000. Defendant organized another corporation, of which it owned all the stock, to which it assigned the option, and which took steps to acquire the property and went into possession. *Held*, that such action was a beneficial use of the option, which entitled plaintiff to recover the stipulated price therefor.

[Ed. Note.—For other cases, see Waters and Water Courses, Dec. Dig. § 31.*]

4. WATERS AND WATER COURSES (§ 31*)—SALE OF OPTION TO BUY PROPERTY—ACTION TO RECOVER PRICE.

Water rights acquired by appropriation of public waters and possessory rights in public lands are valuable rights, capable of being transferred, and may be a lawful subject of contracts of sale, and a defendant, which purchased an option to buy such rights, which it exercised by paying in part therefor and going into possession and expending money in developing the property, cannot defend against an action to recover the stipulated price for the option on the ground that the vendor did not have the legal title to the property.

[Ed. Note.—For other cases, see Waters and Water Courses, Dec. Dig. § 31.*]

In Error to the Circuit Court of the United States for the Western Division of the Western District of Washington.

Action by Edwin P. Pennebaker against the Thompson Company. Judgment for plaintiff, and defendant brings error. Affirmed.

The defendant in error, as plaintiff in the court below, brought an action at law against the plaintiff in error, defendant below, to recover the sum of

$10,000 upon an alleged breach of contract. It was alleged in the complaint that on April 24, 1905, plaintiff was the owner of a certain option and right to purchase certain lands and water rights in the state of Washington from one John L. McMurray, who was then the owner of said lands and water rights. In the agreement between the plaintiff and McMurray, dated December 12, 1904, the water rights were described as two water rights of 1,500 cubic feet each per second of time, appropriated by McMurray under the laws of the state of Washington in such case provided. One of these water rights was further described as located in section 4, township 15 N., of range 4 E. of the Willamette meridian, and recorded in the public records of water claims of Pierce and Thurston counties. The other water right was described as located in section 32, township 16 N., of range 4 E. of the Willamette meridian, and was also recorded in the public records of water rights of Pierce and Thurston counties. Among other conditions of this agreement was a provision that upon demand by the plaintiff, and upon payment to McMurray within six months of the sum of $75,000, or at any time within three months upon the payment of $60,000, or upon the payment of $10,000 within three months, then the term for the purchase price should be extended to six months, and the purchase price of said lands should be $60,000. It was further provided that in case said option, or either of them, should be consummated, McMurray would execute and deliver to plaintiff a relinquishment to the government of the United States of sufficient lands in and about said water rights for the construction of a power house and a right of way for a flume and transmission line purposes and for the development and maintenance of an electric power plant.

It was further alleged in the complaint that upon said April 24, 1905, the plaintiff entered into an agreement in writing with the defendant, whereby plaintiff for a valuable consideration sold, assigned, and transferred to the defendant all his right, title, and interest in and to the said contract and option which plaintiff had with McMurray. In this agreement the plaintiff sold, assigned, transferred, and conveyed unto the defendant all his right, title, and interest in and to the agreement and option with McMurray; and for and in consideration of this assignment the defendant agreed, for itself, its successors and assigns, that in case defendant, by itself, its agents, attorneys, or servants, should make or cause to be made any sale whatsoever under said contract, or should itself, or by its agents, attorneys, or servants, purchase said property under and by virtue of said contract, or otherwise, or in case said defendant, its successors or assigns, by itself, its agents, attorneys, or servants, should assign or cause said contract to be assigned, the defendant would pay plaintiff the sum of $10,000. It was further provided in the agreement that it was the intention of the parties thereto that in case the defendant should in any manner exercise any of the provisions of the option, or in any manner dispose of or use the said option to its benefit directly or indirectly, in such event there should immediately become due and owing from the defendant to the plaintiff the sum of $10,000.

It was alleged in the complaint that the defendant had used said option for its benefit, and had paid to McMurray, the grantor of said option, the sum of $2,000 as part of the purchase price for the lands and water rights therein described, and by virtue of said option had procured from said McMurray a certain agreement concerning the said lands and water rights. It was further alleged that defendant had sold, assigned, and transferred said contract of option and used the same to its benefit. It was alleged that this assignment by the defendant was made to the Cascade Public Service Corporation, a corporation organized and existing under and by virtue of the laws of the state of Washington. It was alleged that the defendant had never paid the sum of $10,000 provided in said agreement between plaintiff and defendant, wherefore plaintiff demanded judgment for the said amount of $10,000. Copies of the agreement between McMurray and the plaintiff, and between the plaintiff and the defendant, and between the defendant and McMurray, were attached to the complaint and made parts thereof.

In its answer defendant denied that it ever used the options or contracts mentioned in the complaint, or assigned the same, or any part thereof, except as in the answer admitted. The admissions were the entering into the mutual

agreements between the plaintiff and defendant, and between the defendant and McMurray, as set forth in the complaint. It was alleged that at the time the defendant entered into its agreement with McMurray the plaintiff was, and for a long time thereafter continued to be, an employé of the defendant, as its engineer in charge of the properties and works proposed by the defendant to be erected in or about the water rights and land therein mentioned, and had been and was well aware and had full knowledge of and consented to the substitution of said last-mentioned agreement in place of the terms of said option from McMurray to plaintiff. It was alleged that by mutual agreement between the said McMurray and defendant, and in pursuance of the terms and conditions of the said written agreement between them, the defendant went into joint possession with said McMurray of said lands, and thereafter diligently prosecuted the work of developing the said water rights and lands for the purpose of erecting and operating an electric generating plant, and ever since had continued so to do, until the defendant had expended upwards of $20,000 for said properties; that for the purpose of acquiring, by condemnation or otherwise, the lands and properties necessary for the purposes aforesaid, and of constructing and operating thereon an electric generating plant, the defendant had caused to be organized and incorporated, under and by virtue of the laws of the state of Washington a corporation, the Cascade Public Service Corporation; that ever since its incorporation the defendant had been by itself and through its agents and employés sole owner of the entire capital stock of the said Cascade Public Service Corporation; that the defendant was authorized by its charter and the laws of the state of Washington to own and hold stock in other corporations, and, having so organized and incorporated the said Cascade Public Service Corporation for the purpose of further continuing the prosecution of its design to construct and operate an electric generating plant on the land mentioned, the defendant formally assigned its agreement with McMurray to said Cascade Public Service Corporation, and thereupon continued the development work begun by the defendant on said water power and plant; that the defendant and the Cascade Public Service Corporation had fully carried out and performed all the terms and conditions under its agreement with McMurray, and had paid McMurray sums of money aggregating in all $2,000; and that McMurray had attempted to, in bad faith, violate all terms and conditions thereof, and was then attempting to avoid and annul and cause the same to be broken, to the loss and damage of the defendant.

The answer then proceeds to state certain transactions wherein McMurray is charged with having conspired with one Warren to fraudulently abandon his claim to said lands as a homestead and fraudulently relinquish the same to the United States, for the purpose of violating his agreement with the defendant; that for the purpose of further protecting their rights in said lands the defendant and the Cascade Public Service Corporation had been compelled to pay and did pay to McMurray and Warren the sum of $800 for the purpose of obtaining from said persons a reconveyance of a portion of said lands; that the Cascade Public Service Corporation notified McMurray that it was ready and willing to pay all money due under the agreement between defendant and McMurray, and thereupon demanded title to said property, whereupon the said McMurray agreed thereto, and agreed to furnish said Cascade Public Service Corporation with the necessary abstract of title to said lands, showing good title in him, the said McMurray; that McMurray had continuously refused to furnish said Cascade Public Service Corporation with the abstract of title, or to convey said lands in accordance with the terms of his said contract; but in violation of his agreement between the plaintiff and defendant, and for the purpose of fraudulently depriving said Cascade Public Service Corporation of its right therein, and further conspiring with said Warren to defeat and prevent any conveyance, had caused to be incorporated under the laws of the state of Washington a corporation under the name of the Aztec Power Company, and caused all the properties described in the agreement between defendant and McMurray to be conveyed to it. The answer further alleged that it believes that the Aztec Power Company paid no consideration for said properties, had no assets except said properties, had no stockholders except said Warren and McMurray, and that

said corporation was organized and incorporated by said McMurray and Warren for the sole purpose of making said transfer of lands, for the purpose of hindering, delaying, and defrauding said Cascade Public Service Corporation.

The answer alleged certain proceedings in court by a corporation named the Nisqually Power Company against McMurray and others for the condemnation of said lands; that neither the defendant nor the Cascade Public Service Corporation were made parties thereto; and it is alleged that McMurray and Warren and the Aztec Power Company had agreed with the said Nisqually Power Company on the terms of sale, and had sold and conveyed, or had agreed to sell and convey, the same to the said Nisqually Power Company; that the said McMurray and Warren had caused the said Aztec Power Company to commence an action in the superior court of the state of Washington against the defendant and the Cascade Public Service Corporation to eject them therefrom; and for the reasons stated there was and had been a total failure of any and all consideration for the promises and agreement on the part of the defendant to pay plaintiff any sum whatever, and that the action was premature and should abate.

The plaintiff in his reply denied that he was ever the engineer of the defendant, in charge of any properties or any works proposed by defendant to be erected in or about the water rights, or any water rights, or the lands, or any lands, named in the agreement between defendant and McMurray. He admitted that he was well aware, had full knowledge of, and consented to the substitution of the agreement between the defendant and McMurray for the option to himself from McMurray; and he alleged that he agreed to such substitution for the sum of $10,000, the sum sued for in the complaint, no part of which had even been paid; admitted that the defendant, in pursuance of the terms and conditions of the agreement between McMurray and the defendant, went into possession of all the lands described in said agreement, and that the defendant prosecuted the work of developing the water rights on said lands; admitted that the defendant had expended $20,000 for said property; admitted that the defendant and the Cascade Public Service Corporation had fully carried out and performed all the terms and conditions to be by them performed under the agreement between the defendant and McMurray, and had paid McMurray the sum of $2,000; admitted that the Cascade Public Service Corporation had duly notified McMurray that it was ready and willing to pay all money due under the agreement between the defendant and McMurray.

Upon these pleadings the case was brought to trial before a court and a jury, and upon evidence being introduced on the part of the plaintiff, including the allegations of defendant's affirmative defense as set forth in its answer, the plaintiff rested; and defendant thereupon moved for a nonsuit, and the plaintiff moved the court to direct the jury to render a verdict for the plaintiff on the ground, first, that the defendant had made the assignment contemplated under the option; second, that defendant had used the option for its benefit; and, third, that the defendant had purchased the land. The jury was thereupon discharged, and the court entered a judgment in favor of the plaintiff for the sum of $10,000.

George M. Sinclair and Ellis, Fletcher & Evans, for plaintiff in error.

George P. Fishburne and Maury & Templeman, for defendant in error.

Before GILBERT and MORROW, Circuit Judges, and HUNT, District Judge.

MORROW, Circuit Judge (after stating the facts as above). The defendant contends that the option contained in the original agreement between McMurray and the plaintiff, and assigned by the plaintiff to the defendant, was void, for the reason that the description of

the property intended to be conveyed is too uncertain to be ascertained, and the option furnishes no means or method for its ascertainment. The water rights were described by the location in certain sections of the public land, and were recorded in the public records of water rights in the counties where located, and the lands to be relinquished to the government of the United States were described as:

"Sufficient lands in and about said water rights for the construction of a power house and right of way for flume and transmission line purposes and for the development and maintenance of an electric power plant."

The objection to this identification is that it is alleged in defendant's answer that McMurray's possession of land was that of a homestead, and that at the time the agreement between plaintiff and defendant was executed, on April 25, 1905, the land was unsurveyed public land of the United States; but it also appears from defendant's answer that, in pursuance of the terms of the agreement between it and McMurray, entered into on June 15, 1905, defendant "went into joint possession with said McMurray of said lands, and thereafter diligently prosecuted the work of developing the said water rights and lands for the purpose of erecting and operating an electric generating plant, and ever since has continued so to do until," at the time defendant filed its answer on February 25, 1908, "defendant had expended upwards of $20,000 for said properties."

Aside from any question as to the right of the defendant, in face of such an allegation, to deny that there was a sufficient description of the property, we think the description in the agreement was sufficient for all practical and legal purposes to identify the lands and water rights conveyed. The laws of the state of Washington provide for the appropriation of water flowing in any river, stream, or ravine, and require that notice of such appropriation in writing must be posted in a conspicuous place at the point of intended storage or diversion, and that a copy of such notice must, within 10 days after it is posted, be filed for record in the office of the auditor of the county in which it is posted. See sections 4091 and 4092, Ballinger's Ann. Codes & St. Wash. (Pierce's Code, §§ 5131, 5132). It was recited in the agreement between plaintiff and McMurray that the water was appropriated by McMurray under the laws of the state of Washington, and this is not denied by the defendant. It will be presumed, therefore, that a notice identifying the appropriation was posted and recorded, and, being referred to in the agreement, such notice was sufficient identification of the water rights, and the description in the agreement of the land "in and about said water rights" was a sufficient identification of the land.

The next objection is that the option contained in the agreement between plaintiff and McMurray is void for the reason that the statute of the state of Washington authorizes the appropriation of water flowing in any river, stream, or ravine for irrigation, mining, or manufacturing purposes, but not for the "development and maintenance of an electric power plant," mentioned in the agreement. As far as appears from the record, the original appropriation by McMurray was for a purpose strictly provided by statute. After such appropriation had

been made, the water could be applied to any beneficial use. Section 4099, Ballinger's Ann. Codes & St. (Pierce's Code, § 5139). The development and maintenance of an electric power plant is clearly a beneficial use. The option is, therefore, not open to the objection that the appropriation is not within the statute.

It is contended on the part of the defendant that the assignment of the McMurray contract made by it to the Cascade Public Service Corporation was not such an assignment as entitled plaintiff to recover, for the reason that it was not an assignment whereby defendant sold or otherwise disposed of the option. The explanation is made that, defendant not being strictly a public service corporation, it was not authorized under the laws of the state of Washington to exercise the power of eminent domain. It therefore organized the Cascade Public Service Corporation, and retained the ownership of its stock and the control of the corporation, as it might do under the law of the state, in order that it might carry out its purpose with respect to the property. But this was the exercise of a right under the agreement, and the beneficial use of the option on the part of the defendant, and it was under this provision of the agreement that plaintiff charges in his complaint that it became entitled to recover in this action.

It is next objected that McMurray had no title to the lands and water rights described in the agreement, and there was, therefore, no consideration for the promise of the defendant to pay for the assignment of the option held by plaintiff. Plaintiff had an option on McMurray's appropriation and possession under the statute. This was a valuable right, capable of being assigned and transferred. Possessory rights on the public domain have always been recognized as transferable, and water rights can be transferred like other property. Weil on Water Rights, § 221. The option on the property held by the plaintiff was the right to purchase the right of possession to these water rights held by McMurray and the further right of possession of sufficient lands in and about said water rights for the construction of a power house, etc. These rights were assigned and transferred to defendant by plaintiff, and thereupon defendant purchased McMurray's right of possession and paid him $2,000 therefor, and at the same time entered upon its joint possession with McMurray and expended upwards of $20,000 for the property. Defendant thereupon became obligated under the agreement to pay to plaintiff the sum of $10,000 for the option. It may be that the defendant did not acquire a complete and perfect title to the property from McMurray; but that was defendant's affair. He acquired from plaintiff all the latter agreed to convey. Plaintiff conveyed his right to purchase McMurray's rights, whatever they might be; and, defendant having purchased under the agreement, it cannot now defend on the ground that there was a failure of consideration.

The judgment of the Circuit Court is affirmed.

(173 Fed. 337.)

CENTRAL COAL & COKE CO v. WILLIAMS.

(Circuit Court of Appeals, Eighth Circuit. October 15, 1909.)

No. 2,992.

1. MASTER AND SERVANT (§ 217*)—MASTER'S LIABILITY FOR INJURY TO SERVANT—ASSUMPTION OF RISK FROM UNSAFE PLACE.

A servant has the right to assume that the master has performed his duty to provide and maintain a reasonably safe place in which to work, and is not required to exercise care to ascertain such fact, but assumes the risk from an unsafe place only where he knows it to be unsafe, or its dangerous condition is obvious.

[Ed. Note.—For other cases, see Master and Servant, Cent. Dig. §§ 574–600; Dec. Dig. § 217.*]

2. EVIDENCE (§ 474*)—OPINION EVIDENCE.

In an action by an employé against a mining company to recover for a personal injury caused by the falling of a rock from the roof of an entry, where there were issues as to whether the roof was unsafe, and, if so, whether defendant should have known it in the exercise of reasonable care, it was not error to admit in evidence the opinions of practical miners familiar with the place, to aid the jury on such issues, which were presumably unfamiliar to the ordinary juror.

[Ed. Note.—For other cases, see Evidence, Cent. Dig. §§ 2200, 2204, 2214; Dec. Dig. § 474.*]

In Error to the Circuit Court of the United States for the Western District of Arkansas.

Action by John Williams against the Central Coal & Coke Company. Judgment for plaintiff, and defendant brings error. Affirmed.

Williams sued the coal company for damages resulting from personal injuries sustained by him while mining coal in a mine operated by the company. The complaint was that defendant failed to observe proper care to keep a roof of an entry in the mine, where the miners were required to keep their powder and fuse and make up their cartridges, in a reasonably safe condition; that as a consequence, while plaintiff was in that entry making up cartridges in the usual and proper course of business, a rock fell from the roof and injured him. Defendant denied the alleged want of care, and pleaded that plaintiff knew, or by the exercise of ordinary care could have known, of the dangerous condition of the roof, and by remaining in defendant's employ assumed the risk of its falling. It also pleaded contributory negligence by the plaintiff and negligence of his fellow servants as the proximate cause of his injury. The cause went to trial on these issues before a jury, and resulted in a verdict and judgment for plaintiff, to reverse which defendant prosecutes error.

Ira D. Oglesby, for plaintiff in error.

James Brizzolara and Henry L. Fitzhugh, for defendant in error.

Before HOOK and ADAMS, Circuit Judges, and CARLAND, District Judge.

ADAMS, Circuit Judge (after stating the facts as above). Much evidence was offered to sustain the issue, tendered by the answer, that plaintiff might in the exercise of ordinary care have discovered the dangerous character of the roof in question, and the court charged the jury that the duty devolved upon the master to exercise reasonable care to make the entry in question reasonably safe and secure, and

properly told the jury that the servant had a right to presume that the master had performed his duty and to proceed with his work in reliance upon that presumption; but the court qualified this correct exposition of the law by adding:

"Unless a reasonably prudent man, in the performance of his work as a miner, would have learned facts from which he would have apprehended danger to himself, in which event the law would not permit him, if he knew, or by the exercise of reasonable care might have known, that the roof of the entry was unsafe, insecure, and dangerous to proceed to work underneath the same; and, if he did so, he assumed the risk and cannot recover."

This in effect told the jury that a servant entering or continuing in the employ of a master is charged with the affirmative duty of exercising reasonable care to find out whether the place provided for him to work in is safe. We have repeatedly held that no such obligation is imposed upon the servant. He has a right to assume that the master has performed his whole duty and that the place is reasonably safe. It is only when it is known by the servant not to be safe, or when it is patent to or plainly observable by him that it is not safe, that the servant assumes the risk of danger. Kirkpatrick v. St. Louis & S. F. R. Co., 159 Fed. 855, 87 C. C. A. 35; Chicago Great Western R. Co. v. McDonough, 161 Fed. 657, 88 C. C. A. 517; Federal Lead Co. v. Swyers, 161 Fed. 687, 88 C. C. A. 547; United States Smelting Co. v. Parry, 166 Fed. 407, 92 C. C. A. 159; Western Inv. Co. v. McFarland, 166 Fed. 76, 91 C. C. A. 504; Ohio Copper Min. Co. v. Hutchings, 96 C. C. A. 653, 172 Fed. 201. The court below, therefore, declared the law more favorably to the defendant than should have been done.

One of the defendant's main contentions is that the evidence conclusively established that Williams was not in the entry where the powder and fuse were kept, and where he was required to make up his cartridges, but was out in a dangerous and abandoned cross-cut, where he was not required or expected to be, and received his injury from a rock falling while there. It is claimed he was thereby guilty of such contributory negligence as precluded recovery by him, and that the trial court erred in refusing to instruct the jury to find for the defendant as requested. After a careful reading of the record, we are satisfied that there was substantial evidence tending to show that Williams received his injury while at work in the entry as claimed by him. The learned trial judge charged the jury explicitly that if he was not injured while in the entry, but chose of his own accord to go into the cross-cut, and while there was injured, he could not recover. The verdict for plaintiff necessarily responded to this issue adversely to defendant's contention, and is conclusive upon us.

Exception was also taken to certain parts of the charge, which stated to the jury in effect that a primary duty rested upon the defendant to so inspect the roof of the entry in question as to maintain it in a reasonably safe condition, and to keep in its employ an inspector whose duty it was to look after the roofs of the entries. It is contended that these and other like expressions imposed the duty upon the master to procure and keep in its service a separate inspector, whose duty it was to look after the roof of the entries.

We do not think the charge as a whole conveys any such meaning. Its manifest purpose was to advise the jury of the undoubted law that a duty rested upon some one or more of the agents of the defendant, through whom only it could act, to perform the primary duty imposed upon the master. As so interpreted, there was no error.

Defendant also excepted to, and specifies as error, the action of the trial court in admitting over its objections the opinions of certain witnesses of large practical experience in coal mining as to whether an experienced miner could determine when a rock was loose in the roof of the entry, or when the roof was unsafe, and also as to whether the entry or roof in question was in fact in a safe condition at the time the plaintiff was injured. It is insisted that these questions substituted the opinion of witnesses for that of the jury, and encroached upon the latter's exclusive province. We think this insistence is untenable. The important issues in the case were whether the roof was actually unsafe, and, if so, whether the defendant in the exercise of ordinary care should have known it. Evidence was, of course, admissible touching the actual physical condition of the entry, and we think the opinion of experts, familiar with the physical condition and operation of the mine, concerning the subjects of inquiry, were also admissible.

This is not a new question with this court. In the very recent case of United States Smelting Co. v. Parry, supra, this court, speaking by Judge Van Devanter, said the general rule limiting the testimony of witnesses to primary facts within their knowledge is subject to certain qualifications; one of them being that a witness "possessed of special training, experience, or observation in respect of the matter under investigation may testify to his opinion, when it will tend to aid the jury in reaching a correct conclusion—the true test being, not the total dependence of the jury upon such testimony, but their inability to judge for themselves as well as is the witness." An exhaustive review of the authorities sustaining the proposition announced is then taken up. It was further remarked in that case that:

> "The tendency of modern decisions is not only to give as wide a scope as is reasonably possible to the investigation of such questions, but also to accord to the trial judge a certain discretion in determining what testimony has a tendency to establish the ultimate facts, and to disturb his decision admitting testimony of that character only when it plainly appears that the testimony had no legitimate bearing upon the questions at issue and was calculated to prejudice the minds of the jurors."

The doctrine of that case received the unanimous approval of all the judges then sitting, and commends itself to our most favorable consideration. It is inconceivable that the opinions of practical mining operatives touching the questions under review would not greatly aid the jury in the performance of its only legitimate function, to reach a correct conclusion. The subject about which the testimony was elicited was underground mining operations familiar to the witnesses as a result of actual experience, and presumably not familiar to the ordinary juror. On the authority of the Parry Case,

we conclude that no error was committed in the reception of the evidence complained of.

This record presents a condition of things in many respects like that involved in Western Investment Co. v. McFarland, supra, in which we held the defendant liable. The plaintiff was set to work in a dark mine, lighted only by the dim and ineffectual light of a candle or lamp in the miners' hats. He had never worked there but a day or two before he was injured, and knew little of the inside of the mine. The recentness of his employment and the natural desire to continue in it had a tendency to make him complacent with his surroundings. He had a right, according to well-established law, to rely upon the owner doing its duty and furnishing him a reasonably safe place to work in, and did so. The testimony discloses that defendant flagrantly failed to discharge this duty; that it negligently, if not recklessly, allowed a dangerous condition of the roof of the entry to menace the safety of its employés, who were required to work under it. This constituted, not only a failure to discharge a legal duty, but a violation of the plainest dictates of humanity. As a result of it the plaintiff was hurt, and the defendant ought to be held responsible for his damages.

Finding no errors prejudicial to the defendant, the judgment is affirmed.

(173 Fed. 340.)

CENTRAL COAL & COKE CO. v. PENNY et al.

(Circuit Court of Appeals, Eighth Circuit. September 13, 1909.)

No. 3,001.

1. ADVERSE POSSESSION (§ 104*)—PRESUMPTION OF LAWFUL GRANT FROM TWENTY YEARS' EXCLUSIVE POSSESSION CONCLUSIVE, UNLESS LEGAL IMPOSSIBILITY.

   A conclusive legal presumption of a grant of the character necessary to sustain title in the possessor arises from the exclusive, uninterrupted, adverse possession of real estate for 20 years, unless there is proof that such a title could not have been acquired by the possessor by any legal possibility.

   [Ed. Note.—For other cases, see Adverse Possession, Cent. Dig. §§ 595-602; Dec. Dig. § 104.*]

2. ADVERSE POSSESSION (§ 104*)—FUTILE ATTEMPT BY ALLEGED GRANTOR TO CONVEY TO OTHERS NO EVIDENCE OF SUCH IMPOSSIBILITY.

   The fact that the grantor, under whom the plaintiffs, who had been in exclusive possession for more than 20 years, claimed, had attempted in vain to convey the land to others, is no substantial proof that he could not, by any legal possibility, have conveyed the land in the possession of the plaintiffs to them.

   [Ed. Note.—For other cases, see Adverse Possession, Cent. Dig. §§ 595-602; Dec. Dig. § 104.*]

3. ADVERSE POSSESSION (§ 31*)—NOTICE OF TITLE.

   The notorious actual possession of real estate is notice to all of the title and of the rights of the possessors thereto.

   [Ed. Note.—For other cases, see Adverse Possession, Cent. Dig. §§ 128-133; Dec. Dig. § 31.*]

4. MINES AND MINERALS (§ 51*)—CONVERSION—MEASURE OF DAMAGES.

One who, unintentionally and in the honest belief that he is lawfully exercising a right he has, enters upon the property of another and removes his ore, his coal, his timber, or any other valuable appurtenant to his land, is liable in damages for the value of the ore, timber, or other thing, in its original place, but for no more.

But one who willfully, intentionally, or with reckless disregard of the rights of another, takes his ore, timber, or other property, and appropriates it to his own use, must respond to the owner for the full value of the property at the time he converts it, without deduction for the labor bestowed or expenses incurred in removing and preparing it for market.

[Ed. Note.—For other cases, see Mines and Minerals, Cent. Dig. § 141; Dec. Dig. § 51.*]

5. MINES AND MINERALS (§ 51*)—PRESUMPTION OF INTENTION TO CONVERT.

The wrongful taking of the ore or timber of another, in the absence of all other evidence, raises a presumption of fact that the trespasser took it intentionally, willfully, or in reckless disregard of the rights of the owner.

[Ed. Note.—For other cases, see Mines and Minerals, Dec. Dig. § 51.*]

6. MINES AND MINERALS (§ 51*)—CONVERSION.

When the defendant bought the land around the two acres claimed by the plaintiffs, and while it was taking ore from beneath the surface of their land, they were, and had been for more than 20 years, in the notorious, uninterrupted, exclusive, adverse possession of their land, upon which they had maintained a church and a graveyard. The church and cemetery were within 200 feet of the shaft of the mine which the defendant bought. . . the deed under which the defendant claimed was an exception of two acres upon which stands a church building, heretofore known as the Wollage Colored Church, and the plaintiffs' church was so known. The officers of the defendant testified that when they bought the property their attorney advised them that the exception was void, and that they had acquired good title to the plaintiffs' land and coal; that they believed that they owned the coal, when they took it from the land of the plaintiffs; that they inquired of their grantor what title the plaintiffs had, and were informed that they had none, but were there by permission; but that they did not inquire of the plaintiffs, or of any of the members of the church, concerning their claim of title.

Held, here was substantial evidence for the jury upon the question whether or not the defendant took the plaintiffs' coal willfully, or with a reckless disregard of their rights.

[Ed. Note.—For other cases, see Mines and Minerals, Dec. Dig. § 51.*]

7. WITNESSES (§ 318*)—EVIDENCE OF REPUTATION OF WITNESS INADMISSIBLE WHERE NOT ASSAILED.

It is not competent for a party to an action to introduce in evidence the testimony of one of his witnesses to the effect that the reputation of another of his witnesses for integrity, veracity, ability, and standing is high, in the absence of evidence assailing his reputation.

[Ed. Note.—For other cases, see Witnesses, Cent. Dig. § 1086; Dec. Dig. § 318.*

Evidence as to character or reputation in civil actions, see note to Morgan v. Barnhill, 55 C. C. A. 7.]

8. DEPOSITIONS (§ 95*)—PARTS OF DEPOSITION.

When a deposition has been properly taken, either party may introduce all or any competent or relevant part of it which is not clearly fragmentary and misleading, and the opposing party may put in evidence any other like part of it.

[Ed. Note.—For other cases, see Depositions, Cent. Dig. §§ 276, 277; Dec. Dig. § 95.*]

(Syllabus by the Court.)

In Error to the Circuit Court of the United States for the Western District of Arkansas.

Action by William Penny and Ben Hubbard, trustees of Cherokee Chapel Church, against the Central Coal & Coke Company. Judgment for plaintiffs, and defendant brings error. Affirmed.

Ira D. Oglesby, for plaintiff in error.

T. B. Pryor and F. A. Youmans, for defendants in error.

Before SANBORN, Circuit Judge, and CARLAND and POLLOCK, District Judges.

SANBORN, Circuit Judge. The trustees of the Cherokee Chapel Church have recovered a judgment against the Central Coal & Coke Company for its conversion of coal which it removed from beneath two acres of land which have been occupied by the plaintiffs as a cemetery and the site for their church for more than 20 years. At the trial the Coal Company admitted that it had removed the coal out of this land; but it challenges the judgment against it on several grounds, the chief of which are that there was no substantial evidence of title by purchase in the trustees of the church, or of an intentional or willful taking and conversion of the coal of the plaintiffs by it.

Title by purchase, as distinguished from title by descent or otherwise, is deemed material by counsel in this case, because the statute of Arkansas provides that such a title conveyed to trustees in trust for the use of any religious society within that state for a meeting house or burying ground shall descend, with the improvements thereon, in perpetual succession in trust to such trustees as shall from time to time be elected or appointed by such society. Kirby's Dig. Ark. § 6851. At a former trial of this case the trustees proved that they and their predecessors had been in the exclusive, uninterrupted, adverse possession of the two acres of land in controversy for more than 30 years; that for that length of time they had maintained a fence around about an acre and a half of the land, and had used that portion of it as a burying ground; and that during this time they had maintained and used a meeting house on the adjoining part, which was not inclosed. The former pastor testified that the church was organized in 1868 or 1869; that in 1869 or 1870 the meeting house was constructed upon the land, and a fence was built around the burying ground, and that about the time the building was constructed there came into his possession a deed purporting to have been executed by one McCullom, and to have been acknowledged before a justice of the peace named Watts; that he took this deed to the register of deeds of the county, and asked him to record it; that the register subsequently returned it to him as recorded; that it was read to the congregation; that he delivered it to one of the trustees of the church, who died about 1880; that the house of this trustee was burned; and that the deed was lost. The Circuit Court held that this evidence was insufficient to establish title; but this court was of the opinion that it constituted substantial evidence that the trustees had title by purchase to this property under the rule announced by the Supreme Court in United States v. Chaves, 159 U. S. 452, 464, 16 Sup. Ct. 57, 40 L. Ed. 215, that "it is the general rule

of American law that a grant will be presumed upon proof of an adverse, exclusive, and uninterrupted possession for 20 years, and that such rule will be applied as a 'præsumptio juris et de jure,' wherever, by possibility, a right may be acquired in any manner known to the law (1 Greenleaf on Evidence [12th Ed.] § 17; Ricard v. Williams, 7 Wheat. 59, 109, 5 L. Ed. 398; Coolidge v. Learned, 8 Pick. [Mass.] 504)," and under its repeated quotation and approval (Ricard v. Williams, 7 Wheat. 59, 119, 5 L. Ed. 398; Fletcher v. Fuller, 120 U. S. 534, 548, 7 Sup. Ct. 667, 30 L. Ed. 759; United States v. Chavez, 175 U. S. 509, 523, 20 Sup. Ct. 159, 44 L. Ed. 255) of this declaration of the law by the Supreme Court of Tennessee in Williams v. Donell, 2 Head, 695, 697:

"It is not indispensable, in order to lay a proper foundation for the legal presumption of a grant, to establish the probability of the fact that in reality a grant ever issued. It will be a sufficient ground for the presumption to show that, by legal possibility, a grant might have issued. And, this appearing, it may be assumed, in the absence of circumstances repelling such conclusion, that all that might lawfully have been done to perfect the legal title was in fact done, and in the form prescribed by law." Penny v. Central Coal & Coke Co., 71 C. C. A. 135, 139, 138 Fed. 769, 773.

The true rule of law upon this subject is, therefore, that if a title by purchase were necessary to sustain the legal title of the trustees to this property in the case in hand, then, if by any legal possibility a title by purchase could have been acquired by them in any manner known to the law, the uninterrupted, exclusive, adverse possession of the trustees for more than 20 years raises the conclusive presumption that such a title was acquired by them.

The trustees proved the facts established at the first trial in the same way upon the second trial, which is here for review; but counsel for the Coal Company insist that those facts were insufficient to sustain a finding by the jury that the trustees had obtained a title by purchase, because the Coal Company proved that on May 26, 1869, the register of deeds, with whom the pastor left his deed to be recorded, registered a deed dated April 19, 1869, made by McCullom and acknowledged before Watts, to the free colored inhabitants of township 5 N. of range 31 W. of the fifth principal meridian, of an impossible and hence void description of land in that township, and that no other deed from McCullom appeared in the index or in the records of the county between 1863 and 1883. The plaintiffs, however, proved that the deed to the defendant and the deed to its grantor, both of which conveyed a title claimed under McCullom, contained after the descriptions therein these words, "Excepting out of the northwest quarter of the said southwest quarter (N.W. ¼ of S.W.¼) two acres upon which stands a church building heretofore known as the Wollage Colored Church, used as a church, schoolhouse, and graveyard;" that their church was known by that name; and that, when the Coal Company obtained its title, the meeting house and the graveyard were within 200 feet of the shaft of its mine and in plain sight from it. Counsel argue that this evidence conclusively proved that the deed which the pastor of the church received and recorded was the void deed from McCullom to the colored inhabitants of section 5, and from this fact they draw the inference

that there could not have been a conveyance to the trustees of this church.

Let the fact upon which they base this inference be conceded; but the fact that an alleged grantor made a void deed to others no more repels the presumption that he made one to alleged grantees than the absence of all proof of such a deed. In the absence of all proof of that character, the exclusive, uninterrupted, adverse possession of the plaintiffs for more than 20 years, and the presumption which that possession raised that they had acquired a legal title to the premises they occupied by purchase, if there was any legal possibility that they could have so acquired it, and the indisputable possibility that McCullom might have conveyed this property to the trustees by a deed in proper form, acknowledged before Watts, conclusively established their title. Indeed, the legal possibility, which certainly exists, becomes even a probability, in view of the fact that the deeds under McCullom's title contained the exception which has been recited. In this state of the case there was no substantial evidence that the acquisition by the trustees of the title to their property by purchase was a legal impossibility, the court might have lawfully instructed the jury that the title of the plaintiffs was conclusively established by their proof of possession and the presumption of a grant to them, and a verdict to the contrary could not have been sustained. In this state of the record there was no error prejudicial to the Coal Company, either in submitting this question of title to the jury, or in the instructions of the court, or in its refusals to instruct upon this issue.

We turn to the measure of damages. This was not an action for damage to the realty, but an action for the conversion of the coal wrongfully taken from the land; for the only damages prayed were for that conversion. Stone v. United States, 167 U. S. 178, 182, 17 Sup. Ct. 778, 42 L. Ed. 127; Peyton v. Desmond, 63 C. C. A. 651, 656, 657, 129 Fed. 1, 6, 7; United States v. Ute Coal & Coke Company, 85 C. C. A. 302, 304, 158 Fed. 20, 22. At the close of the trial counsel for the Coal Company requested the court to instruct the jury that the trustees could not recover in any event more than the value of the coal removed as it lay in the ground before its removal. The court denied this request, and charged the jury as follows:

"The rule for the measure of damages in cases of trespass in taking the coal of another depends upon the circumstances under which the coal was taken. If you find that the coal was either recklessly, willfully or intentionally taken by the defendant company from the land owned by plaintiffs, as aforesaid, without right, then the measure of damages is the enhanced value of the coal at the mouth of the shaft, or where it was finally converted to the use of the defendant. But if you should find that the defendant took and converted the coal from the land owned by the plaintiffs through inadvertence or mistake, or in the honest belief that it was acting within its legal right, then the measure of damages is the value of the coal as it was in the ground before it was disturbed by the defendant. The wrongful taking of coal, in the absence of any explanation or other evidence, raises a presumption of fact that the trespasser took it intentionally and willfully. That presumption, however, is a disputable one, which evidence may so completely overcome as to remove the presumption that it was intentionally and willfully done."

These rulings of the court are specified as error. But the charge was a correct statement of the measure of damages and of the pre-

sumption from a wrongful taking (Resurrection Gold Min. Co. v. Fortune Gold Min. Co., 64 C. C. A. 180, 191, 129 Fed. 668, 679; United States v. Ute Coal & Coke Company, 85 C. C. A. 302, 305, 158 Fed. 20, 23; United States v. Homestake Mining Co., 54 C. C. A. 303, 304, 308, 117 Fed. 481, 482, 486), and the only question for consideration here is whether or not there was any substantial evidence that the taking was willful or in reckless disregard of the rights of the plaintiffs. While mere negligence that is synonymous with inadvertence is insufficient alone to sustain a finding of a willful trespass or taking, one may be so far negligent as to justify the inference that he acted knowingly and intentionally and to warrant a jury in finding that his act was reckless or willful. An intentional or reckless omission to ascertain the rights or the boundaries of land of his victim for the purpose of maintaining ignorance regarding them, or a reckless disregard of them, is as fatal to the claim of a trespasser to limit the recovery of damages against him to the lower measure as is an intentional or willful trespass or taking. Golden Reward Min. Co. v. Buxton Min. Co., 38 C. C. A. 228, 238, 97 Fed. 413, 422; Resurrection Gold Min. Co. v. Fortune Gold Min. Co., 64 C. C. A. 180, 192, 129 Fed. 668, 680.

The notorious actual possession of real estate is notice to all of the title and of the rights of the possessors thereto. In 1902, when the Coal Company bought the mine under the lands adjoining the property in controversy, and during the time when it was taking the coal from this property, the trustees were in notorious possession of it, their church and graveyard were within 200 feet of the shaft of the defendant's mine, in plain sight therefrom, the company knew that it was taking coal from the property upon which this church and graveyard were located, and it knew that the deed to its grantor and its own deed contained the exception which has been recited. Under these circumstances it took the risk of the plaintiffs' claims when it appropriated their coal, for their notorious possession was notice of their title; and there was no error in the instruction of the court that it was "the duty of any person buying land who finds persons occupying the land to inquire into and ascertain the nature and the character of the occupancy." It is true that the attorney of the Coal Company and its other officers testified that when the company purchased the attorney examined the title and inquired of the grantor and of others than the trustees and the members of the church what the title and claims of the latter were, and that he was informed that they had no right or title to the land, except permission to use the surface for their church and burying ground, and that this attorney advised the other officers of the company, and they and he in good faith believed that the exception in the deeds was void, and that they conveyed to the Coal Company good title to the land and to the coal in controversy. All this was competent and material evidence for the consideration of the jury in their determination of the question whether or not the Coal Company took and converted the coal willfully or with a reckless disregard of the rights of the plaintiffs.

But the notorious occupation of the latter was notice of their exclusive, uninterrupted possession for more than 20 years, of their pre-

sumptive grant, of all these facts which the officers of the company would have learned if they had asked the trustees or the members of the church what their claims to this property were. While the attorney and the general manager of the company testified that they believed in good faith that the coal in controversy belonged to the company, they both testified that they never inquired of the plaintiffs or of any members of the church what their rights or claims were. In view of the notorious possession of the land by the plaintiffs, of the church and the graveyard thereon in plain view from the defendant's shaft, of the warning exception in the deeds under which it claims, and of the company's wary refraining from inquiring of the plaintiffs what they claimed their rights to the land and the coal in question to be, it cannot be lawfully held that there was no substantial evidence here that the Coal Company took and converted this coal with a reckless disregard of the rights of the plaintiffs. The question of the measure of damages to which the plaintiffs were entitled was rightly submitted to the jury.

It is assigned as error that the court refused to permit the defendant to prove by another witness the general reputation of one of its witnesses as a man and a lawyer for integrity, veracity, ability, and high standing; but it is only when the good reputation of a witness has been assailed by evidence that testimony in support of it is admissible, and here no such attack had been made.

The specification of error that the court permitted the plaintiffs to introduce in evidence the cross-examination of one of their witnesses contained in a deposition, after they had introduced the direct examination and the defendant had declined to put the cross-examination in evidence is baseless. When a deposition has been properly taken and filed in the court, either party may introduce all or any competent and relevant part of it which is not clearly fragmentary and misleading, and the opposing party may put in evidence any other like part. H. Scherer & Company v. Everest, 94 C. C. A. 346, 168 Fed. 822, 827; Crotty v. Chicago Great Western Ry. Co., 95 C. C. A. 91, 169 Fed. 593.

There was no error in the trial of the case prejudicial to the Coal Company, and the judgment below must be affirmed.

It is so ordered.

(173 Fed 346.)

HASTORF v. O'BRIEN et al.

(Circuit Court of Appeals, Second Circuit. July 21, 1909.)

No. 278.

SHIPPING (§ 54*)—BAILEE FOR HIRE OF SCOW—LIABILITY FOR INJURY OF VESSEL.

Bailees for hire of a scow, bound to exercise ordinary care to protect her from injury, are not liable for her injury by being pierced by a timber standing upright in the bottom under her, where she lay while being unloaded, where the place had been dredged and swept for obstructions but a month before by the city, and where their own vessel, which was larger, had safely lain in the same position only five days before.

[Ed. Note.—For other cases, see Shipping, Cent. Dig. §§ 219, 220; Dec. Dig. § 54.*]

Appeal from the District Court of the United States for the Southern District of New York.

In Admiralty. Action by Albert H. Hastorf, as owner of the scow Arcadia, against Henry O'Brien and others, as bailees for injury to the scow. Decree for libelant, and respondents appeal. Reversed.

The libelant is the owner of the scow Arcadia, which in January, 1907, was chartered to the respondents and was used by them to carry stone to a contractor who was constructing new ferry slips at Thirty-Ninth street, Brooklyn. On January 3, 1907, the respondents loaded the scow with rip-rap at Manhattan, and she was thereupon towed to the Brooklyn work. When she reached there she was taken through an open space into an inclosure surrounded by piling where a crib was being sunk by putting stone in it. Some rip-rap had already been put in, and the stone which composed the scow's cargo was partially unloaded into the crib. Before she was wholly unloaded, however, the scow listed and soon sank. Subsequent examination showed that the cause of the sinking was the penetration of a timber which was imbedded in the bottom of the river in a nearly upright position. This timber had pierced the bottom of the scow and had gone through as far as her deck. It was sawed off and the scow later repaired. The ferryboats in going in and out passed close to where the scow lay, and their suction was sufficient to draw her down about a foot.

The respondents made no examination of the bottom before placing the scow alongside the crib. The place where she lay, however, had been newly dredged. and the bottom had been swept for obstructions by an engineer of the city dock department about a month before the accident. No obstructions were found at this place. A few days before the accident another scow of the respondents, the Whitelight, loaded with stone for the crib, had been moored by them in substantially the same place where the Arcadia was when injured. This scow was larger than the Arcadia, remained there under substantially the same conditions as existed in her case, and suffered no injury.

The District Court held that the respondents had failed to establish their freedom from negligence and rendered a decree for the libelant.

Foley, Martin & Nelson, for appellants.

James J. Macklin (De Lagnel Berier, of counsel), for appellee.

Before LACOMBE, COXE, and NOYES, Circuit Judges.

NOYES, Circuit Judge (after stating the facts as above). The respondents were bailees for hire of the scow and were bound to use ordinary care in operating her. They were not insurers and were not obliged to adopt every known means to guard against accident. They were only required to take such precautions as, under all the circumstances, a reasonably prudent person would have taken.

Now in this case what precautions ought the respondents to have taken to guard against the accident which occurred? And this involves the further inquiry: What precautions could they have taken? Had the timber been imbedded in the bottom before the scow was towed there, its presence could have been discovered by employing divers to search the bottom. So the bottom might have been swept in the manner of the engineers of the dock department. But these were extraordinary precautions, which, under the circumstances, we think the charterers of a scow used in this class of work were not required to take. In our opinion they did their full duty when they sent the scow only to a place where their own vessel had lain in safety under similar conditions but a few days before. As men of ordinary prudence they might well have concluded that a place was safe for their chartered

boat in which their own larger vessel had been moored for the same purpose and had sustained no injury.

But it is said that they failed to guard against the possibility of the timber being imbedded in the bottom between December 29th, when the Whitelight was there, and January 3d, when the accident occurred, as well as the possibility of the timber floating under the vessel in an upright position after she was moored. We think, however, that ordinary care did not require them to apprehend these improbable happenings. Extraordinary, and not ordinary, care alone would have guarded against them. In our opinion, the respondents as bailees for hire showed that they failed in the performance of no duty which they owed the libelant.

The decree of the District Court is reversed, with costs, and the cause remanded, with instructions to dismiss the libel, with costs.

NOTE.—The following is the opinion of Adams, District Judge, in the court below:

ADAMS, District Judge. This action was brought by the owner of the scow Arcadia to recover for damages received in the forenoon of January 4, 1907, at a wharf then under construction at 39th Street, South Brooklyn.

The libel alleges that the employé of the respondent hauled the scow Arcadia into an opening made in the dock running from the foot of 39th Street, that this opening separated the said dock, making two parts of the same, the dock was undergoing repairs by the respondent, that the cargo of stone laden on said scow being for filling in the crib work; that at the time of hauling the scow into the place it was high water and that on the falling of the tide on or about the 4th day of January, in the afternoon of said day, the scow took a list to port and it was subsequently ascertained that a plank broke through the bottom of the scow, resulting in the scow taking the list, causing her to leak and settle on the bottom; that during the said times the scow was under charter of the respondent, under agreement with the libellant, and that said respondent agreed to return the boat at the expiration of the charter in the same condition as received.

And the libel also alleges that the plank or timber that broke through the bottom of the scow was a part of the old dock imbedded in the bottom and left by the respondent in the gap made by them in the said dock and opening where the scow was hauled by the employés and servants of the respondent.

The defense is; that the respondent admits that on or about the 3rd of January, 1907, at the foot of 55th Street, North River, the respondent loaded some stone on board the scow Arcadia, but they deny that they completed the loading of a cargo of stone on the scow. They admit said scow was towed to the foot of 39th Street, Brooklyn, by the tug Henry O'Brien—and it has been proved here that was one of the respondent's boats. They admit the scow was brought into the crib at the foot of 39th Street.

Respondent alleges as a separate defense, that the respondents were engaged in the building of new ferry racks and cribs at the foot of 39th Street, East River, and that at the time the crib had been sunk the respondents were engaged in filling the crib; that in the work the scow Arcadia was employed to convey a load of rip-rap from 55th Street to 39th Street, where the respondent was carrying on the said work; that on the 3rd day of January, 1907, the respondent was placing rip-rap on the scow and when a portion of the same had been loaded the captain of the scow refused to permit any more rip-rap or cargo to be placed on said scow because it was then in a leaky condition and unfit to receive any further cargo; that at the time and for some time prior thereto the said scow was rotten, old and leaky and unseaworthy; that thereupon the said scow was brought with such portion of her cargo as she had on to 39th Street, and upon reaching there efforts were made to promptly unload her; that a rain storm came up while the unloading was going on and the unloading was interrupted; that while the scow lay in the crib at 39th

Street she took in such a quantity of water that she sank; that the sinking was caused without any fault, neglect or want of care on the part of the respondent, but was caused solely through the old, rotten, leaky and unseaworthy condition of the said scow; that the place where the scow sank was a good and safe berth, free from all obstructions of every kind.

I think we ought first to dispose of the claim of unseaworthiness. It has been argued here on the part of the respondent that the unseaworthiness, even if it existed, was not contributory to the sinking. The testimony, however, satisfies me that the boat—although old and somewhat the worse for wear and perhaps incapable of carrying a full cargo—was on this occasion quite capable of carrying the cargo that was loaded on her. She did carry it safely to 39th Street, where she was placed in the crib. There does not appear to have been any undue leakage on her part on the way over. Some hours after it was discovered she was leaking. What was the cause for this leaking? It turned out from the examination of the diver—who went there a few days after the boat sank—that the bottom was filled with wreckage. Perhaps I should qualify that somewhat. He did not say it was absolutely filled, but that he found a piece of wreckage—a scantling of timber, 8x12—embedded in the bottom there and projecting upward and that the scow had set on this piece of timber and a hole had been broken through her bottom through which the timber extended up so that it rested against her deck. This scow was what is known as a deck scow, that is, she did not carry anything in her hold, but carried all her cargo on deck. The diver, when he went down had to encounter obstacles under the deck put there for the purpose of strengthening the scow and he was very persistent and managed to go to the place of injury, where he found this plank protruding through the bottom and up against the deck. I have no doubt whatever that that was the cause of the boat sinking, and the only thing that is troubling me in the case is whether the respondent was in any way negligent, thereby causing the boat to sink.

Of course as bailees for hire the respondent was under a duty to take at least ordinary care of the scow and in order to make them responsible it is necessary that some negligence appears on their part. That is the real question in this case. Were they, or were they not, negligent in sending the boat to that place?

The Circuit Court of Appeals (Johan Swenson v. Snare & Triest Company, 160 Fed. 459, 87 C. C. A. 443) has recently said, in a case of this kind:

"It is admitted that the pile driver was chartered by the respondent from the libellant and that while in the exclusive possession of the respondent it sank and was lost. As such an occurrence is not in the ordinary course of things, the burden was thrown on the respondent as a bailee to show how the loss took place and that it was not caused by its negligence. * * *

"The District Judge heard the witnesses. He had an opportunity to note their appearance and behavior upon the stand. He has found that the evidence showed negligence upon the part of the respondent. We need not go so far. It is sufficient for us to say that we have carefully examined the whole record and, in view of the findings of the trial court, are unable to hold that the respondent has sustained the burden of proof imposed upon it by law."

It appears here that the respondent sent its own boats there and one of the boats the same size as the Arcadia had lain in practically the same place without receiving any injury; that it was a boat which drew about the same water and that she remained there through all stages of the tide and she had received no injury whatever.

I have no doubt the Arcadia was lying in such a way that in ordinary circumstances when there was no special commotion of the water, she would not have touched this obstruction, although she would probably have been quite near it. The testimony shows that the ferryboats going into and out of their slips in that vicinity—partly at the end of the slip at this time on the south side of the wharf which was about 1,200 or 1,500 feet long up to the place of the opening where the scow was injured—created a great suction so that the water was removed from underneath the boats, I think the witnesses say, about a foot; causing the boats to settle a foot lower than they would otherwise have done. Now I think that was the cause of this accident. This other scow belonging to the respondent which had lain in the same place could not

have met these same conditions or she might not have passed through the experience without injury. The Arcadia was, apparently, in whatever suction took place there brought down so that her bottom rested upon the obstruction which I have already described and which doubtless made a hole in her so that this piece of plank ran into her bottom and created a serious opening causing her almost immediately to take in water enough to sink her.

It remains to be determined, now, whether the O'Briens should have anticipated such a state of affairs as that. They were bound to take ordinary care of this boat and bound not to take her into a place where she would be subjected to any extraordinary stress or danger. It seems to me that they should have known that the effect of the commotion caused there by the ferryboats would be to lower the scow considerably in the water, at least as much as a foot, and that they ought to have taken that into consideration, what she would meet with under such circumstances. It has been testified here that the place was dredged out and that no obstructions were found, but as I recall the testimony that was done by the City and not at the expense of the respondent. I do not think, however, even if these parties who did the dredging had been the agents of the respondent that the respondent would be relieved by that dredging, if they were otherwise liable, because the man who testified about it really did not know what was taking place there. It seems to me if there had been any such dredging as the witness for the City seemed to indicate there had been, this obstruction would have been discovered. It must have been there for some little time, it was embedded in the sand; whether that embedding was caused by the weight of the boat or something else, it is impossible to tell. Quite likely the weight of the boat resting on the obstruction did push it down into the sand—although sand is not such a material as yields to anything of that kind as readily as mud would. I believe that was the cause of this accident, that no precautions were taken by the respondent to ascertain what the scow Arcadia would meet with when she was subjected to the effect of the ferryboat swells and it seems to me that in that respect they were negligent. They should have known what the effect of those swells would be upon the scow and in failing to ascertain that, they were guilty of negligence, such negligence as ought to make them responsible for the effects of this accident.

I therefore direct that a decree be entered for libellant against the respondents with an order of reference.

(173 Fed. 350.)

PATTON et al. v. MARSHALL.

(Circuit Court of Appeals, Fourth Circuit. July 13, 1909.)

No. 871.

1. EQUITY (§ 204*)—CROSS-BILL—BRINGING IN NEW PARTIES.

New parties cannot be brought into a suit in equity by a cross-bill; but, if the interest of defendant requires their presence, he should take the objection of nonjoinder and compel complainant to amend.

[Ed. Note.—For other cases, see Equity, Cent. Dig. § 467; Dec. Dig. § 204.*]

2. EQUITY (§ 204*)—CROSS-BILL—RIGHT TO FILE.

In a suit in equity by the purchaser of coal rights in lands for a specific enforcement of the contract, the terms of which were in dispute between the parties, the defendant cannot by cross-bill bring in as parties defendant the agents who made the contract, on his behalf and with his approval, to have their right to commissions determined, a controversy which has no relevancy to the principal suit, and in which complainant has no interest.

[Ed. Note.—For other cases, see Equity, Dec. Dig. § 204.*]

3. COURTS (§ 307*)—FEDERAL COURTS—JURISDICTION OF CROSS-BILL.

If a cross-bill in a federal court assumes the character of an original bill, it will be dismissed for want of jurisdiction, where the parties to the controversy presented thereby are citizens of the same state.

[Ed. Note.—For other cases, see Courts, Dec. Dig. § 307.*]

4. COURTS (§ 508*) — FEDERAL COURTS — INJUNCTION AGAINST PROCEEDINGS IN STATE COURT.

Under Rev. St. § 720 (U. S. Comp. St. 1901, p. 581), which provides that a writ of injunction shall not be granted by a federal court to stay proceedings in any court of a state, a federal court has no power to enjoin the further prosecution of an action at law in a state court between citizens of the same state to permit one of the parties to litigate the same question before it by making the other party a defendant in a suit in equity pending therein.

[Ed. Note.—For other cases, see Courts, Dec. Dig. § 508.*

Enjoining proceedings in state courts, see notes to Garner v. Second Nat. Bank, 16 C. C. A. 90; Central Trust Co. v. Grantham, 27 C. C. A. 575; Copeland v. Bruning, 63 C. C. A. 437.]

Appeal from the Circuit Court of the United States for the Northern District of West Virginia, at Parkersburg.

Suit in equity by Elwood D. Fulton against T. Marcellus Marshall and others. To a cross-bill filed by Marshall, making them parties, John Patton and Thomas L. Evans demurred. From an order overruling the demurrer and granting an injunction staying an action in a state court, they appeal. Reversed.

On the 2d of October, 1901, T. Marcellus Marshall, residing in the state of West Virginia, entered into a contract with John Patton and T. L. Evans as follows:

"I hereby authorize John Patton and T. L. Evans, of Harrison county, W. Va., to act as my agents in selling something like two or two and one-half thousand acres of land containing coal of the Pittsburg vein of coal that I own or control. I agree to make deeds of general warranty of perfect title for all lands as soon as the money shall be paid to me or deposited to my order in some bank specified by me to be held by it in escrow during the reasonable and necessary time for me to execute said deeds and for the grantees to examine them and the claim of title back of them. I retain all rights and discretion in the matter, and said Evans and Patton are merely employed by me to carry out my directions in the matter.

"Glenville, W. Va., Oct. 2, 1901. T. Marcellus Marshall.

"I accept the above agency.

"John Patton & T. L. Evans."

The said Marshall at the time was the owner, in his own right, of a considerable quantity of coal lands, and also had control of other lands as administrator with the will annexed of Robert R. Marshall, deceased. Acting upon the authority conferred as above, Patton & Evans entered into a contract with E. D. Fulton on the 25th of October, 1901, from which, in order to show the character of the sale, the following paragraph therein is here copied:

"That the parties of the first part do hereby sell to the party of the second part all of the coal known as the Pittsburg vein upon and underlying the farm or tracts of land owned by T. M. Marshall, and also all of the coal of the vein aforesaid controlled by said T. M. Marshall, as executor of the last will of R. R. Marshall, deceased, situate in the counties of Gilmer and Braxton, in the state of West Virginia, on the waters of the Little Kanawha river, Sliding run, Long run, Joe's run, Heater's fork, Dusk Camp, Copen's run, and other tributaries of the said river, containing from two thousand to twenty-five hundred acres, more or less, of surface, at the price of thirty-five dollars per acre for coal; no allowance being made for outcrops, but saving and excepting there-

from all veins or strata of coal other than that usually called the Pittsburg vein. This sale is understood to include all the coal, subject to the exceptions hereinbefore stated which the executor (who is understood to be the said T. M. Marshall) is entitled to sell and convey under the provisions of the will of the said Robert R. Marshall, deceased, and also all of the coal owned by the said T. M. Marshall, in consideration whereof the party of the second part agrees and binds himself to pay the purchase money of thirty-five dollars per acre, as follows, to wit."

The terms of the sale were $2,000 in cash, which Fulton paid to Marshall, $5,000 additional within 30 days, which Fulton also paid, and a sum sufficient to make up one-third of the whole purchase price within 90 days from the date of the sale. Marshall agreed to pay Patton & Evans $2.50 per acre for the services they were to render in making the sale of the lands above described. Marshall at first demurred to the contract which his agents, Patton & Evans, had made with Fulton, but afterwards ratified it and accepted the cash payments, and Fulton then made a deposit in bank of the sum of $16,500 to Marshall's credit, which was intended to cover the one-third payment required by the contract. Afterwards, as appears from the record, a disagreement arose between Marshall and Fulton as to the construction of the contract, Marshall insisting that he was to have pay for the land contracted to be sold according to the actual surface area of each of the tracts, to be computed from the horizontal measurement of the exterior boundaries, without reference to the actual coal area of the said tracts, and that, whilst Fulton had bought upon these terms, the contract was only to convey to him the actual Pittsburg vein or stratum of coal underlying the said tracts. On the other hand, Fulton contended that he was not to pay per acre for surface measurement, but only for the quantity actually underlaid by the kind of coal prescribed in the contract. Marshall refused to execute deed to Fulton upon the terms claimed by the latter, and thereupon Fulton filed his bill on the equity side of the docket in the Circuit Court of the United States for the Northern District of West Virginia to compel specific performance of the contract of sale made with him by Marshall, through his agents, Patton & Evans, on the 25th day of October, 1901.

Fulton's bill was filed on the 4th of September, 1903, and he named as defendant in his suit T. Marcellus Marshall, in is own right and as administrator with will annexed of Robert R. Marshall, deceased. By leave of the court Fulton filed in his cause on November 3, 1903, an amended bill, in which Robert M. Marshall, John S. Withers, and Robert G. Linn are named as defendants in addition to those in the original bill. In the amended bill Fulton seeks the same relief as in the original; the object of the amendment being, as appears from the record, to bring in as additional parties defendant Robert M. Marshall, John S. Withers, and Robert G. Linn. Robert M. Marshall was claiming an interest as one of the devisees under the will of Robert R. Marshall in the coal lands contracted to be sold to Fulton, and John S. Withers also claimed an interest in the said lands by reason of a conveyance from Charles E. Marshall, who was a devisee also under the said will. Robert G. Linn, the other defendant brought in, was, so it was alleged, the owner of one of the tracts of land sold to Fulton. Robert M. Marshall and John S. Withers were undertaking to assert whatever right they may have had in these coal lands by a bill of complaint which they had filed on the 13th of November, 1903, in the circuit court of Gilmer county, W. Va., after Fulton had filed his bill in the Circuit Court of the United States, as before stated. They named as defendants in their bill in the circuit court of Gilmer county T. Marcellus Marshall, in his own right and as administrator of Robert R. Marshall, deceased, Elwood D. Fulton, and Robert G. Linn.

The bill filed by Robert M. Marshall and John S. Withers in the state court sought to compel Fulton and T. Marcellus Marshall to carry out the contract which had been made through Patton and Evans for the sale of the Pittsburg vein of coal upon and underlying the tracts of land which T. Marcellus Marshall owned and controlled, as heretofore stated. The complainants in that bill claimed that they were entitled to a part of the proceeds of this sale, because of an alleged interest in some of the lands embraced in the contract. The disclosure of these facts, it is assumed, led to the filing of Fulton's

amended bill in the Circuit Court of the United States to bring in Robert M. Marshall, John S. Withers, and Robert G. Linn as parties defendant. On the same day that Fulton's bill was filed in the Circuit Court, to wit, the 4th day of September, 1903, John Patton and Thomas L. Evans, T. Marcellus Marshall's agents, who made the contract of sale with Fulton, brought a suit at law in the circuit court of Gilmer county, W. Va., against T. Marcellus Marshall, to recover of him their compensation for services rendered in effecting the sale to Fulton under the contract of October 2, 1901. Their declaration was in assumpsit, and they demanded a commission of $2.50 per acre for the number of acres which Marshall authorized them to sell. To this declaration Marshall demurred; but, his demurrer having been overruled, he entered his plea of non assumpsit on January 11, 1904, and the issue was joined. Upon the petition of T. Marcellus Marshall, the defendant, the circuit court of Gilmer county stayed proceedings in the suit of Patton and Evans from time to time and until March term, 1907, of said court. At this term of the said court, at the instance of Marshall, the court again stayed proceedings in the suit until the next regular term of the court. Before the day arrived to which the last stay had been given, T. Marcellus Marshall on June 27, 1907, filed his cross-bill in the Fulton suit in the Circuit Court of the United States. The prayer of this cross-bill was, among other things, that John Patton and Thomas L. Evans be made parties defendant, and that their rights be litigated and determined in the Fulton suit, and that they be enjoined and restrained from proceeding further in the action which they had brought in the state court. The Circuit Court, in response to this prayer, directed a subpœna to be issued commanding the said Patton and Evans to appear, and also granted a restraining order enjoining them from proceeding with their case against T. Marcellus Marshall in the state court. Patton and Evans demurred to the cross-bill and moved to dissolve the injunction. The demurrer was overruled, and a decree entered continuing the injunction. From this decree Patton and Evans appealed to this court.

The assignments of error on this appeal present for consideration two propositions: First, that the defendant, T. Marcellus Marshall, could not by his cross-bill make Patton and Evans parties defendant to the Fulton suit in the Circuit Court of the United States; Second, that the Circuit Court was, by reason of section 720, Revised Statutes of the United States (U. S. Comp. St. 1901, p. 581), without jurisdiction to enjoin the action at law which Patton and Evans had brought and which was pending in a court of the state of West Virginia.

John W. Davis (R. F. Kidd and Davis & Davis, on the briefs), for appellants.

W. E. R. Byrne (Linn & Byrne, on the briefs), for appellee.

Before GOFF and PRITCHARD, Circuit Judges, and BOYD, District Judge.

BOYD, District Judge (after stating the facts as above). It is the privilege of a complainant in a bill in equity to make such parties defendant in his suit as he may elect, provided such parties come within the class of necessary parties, or proper parties, or both; but even the complainant has no right to go beyond these classes, and bring into his suit those who have no connection with the controversy disclosed in the bill, nor interest or concern in its determination. It seems that the complainant in the equity cause of Fulton against Marshall, pending in the Circuit Court of the United States, had brought before the court all the parties, so far as interests are disclosed by the record, necessary to a complete determination and adjudication of the subject-matter of his bill. In the outset he made party defendant T. Marcellus Marshall, in his own right and as administrator, with whom

the contract of sale had been made, and as against these parties the complainant sought specific performance. It was afterwards ascertained that Robert M. Marshall and John S. Withers claimed an interest in the proceeds of the sale, and it was further ascertained that the legal title to one of the tracts of land included was in Robert G. Linn. It cannot be denied that if the Marshall last named and Withers and Linn held title to portions of the land included in the contract of sale, or were entitled to participate in the distribution of the proceeds, they were at least proper, if not necessary, parties. It was the orderly course, therefore, when Fulton discovered that these persons were claiming an interest in the lands wherein he had contracted to buy coal rights which might in some way affect the title to be derived from T. Marcellus Marshall, that he should proceed by an amended bill to make them parties defendant. When Fulton had brought before the court as defendants in his action all such parties as he knew or had ground to believe were interested in the subject-matter of his action, he had the right to proceed with his cause without interruption on the part of one of the defendants by an effort to introduce into the litigation an independent disconnected controversy between such defendant and outside parties.

If the complainant had omitted to bring in parties who were necessary to a complete determination of equities between himself and one or more of the defendants, or among defendants themselves, in regard to the subject-matter of the suit, a cross-bill was not the proper proceeding by which to supply such defect. A cross-bill in equity possesses no such function.

"The purpose of a cross-bill is either to obtain a discovery in aid of a defense to the original bill, or to obtain full relief to all the parties touching the matter of the original bill." Story's Equity Pleading, § 385.

"New parties cannot be introduced into a cause by a cross-bill. If the plaintiff desires to make new parties, he amends his bill and makes them. If the interest of the defendant requires their presence, he takes the objection of nonjoinder, and the complainant is forced to amend or his bill is dismissed." Shields et al. v. Barrow, 17 How. 130, 15 L. Ed. 158.

But, aside from this, Fulton's suit was for the specific performance of a contract of sale, a cause of action peculiarly cognizable in a court of equity. It was of no concern to him what Marshall had agreed to pay his agents whom he had authorized to secure a purchaser for the coal rights in the lands, nor could the compensation for services due or claimed by such agents enter into Fulton's cause of action. In equity pleading, the answer is a defense to complainant's bill, and does not set up grounds for affirmative relief. Such relief is granted upon a cross-bill. But affirmative relief in response to the prayer of a cross-bill is against either the plaintiff or a codefendant in the original bill. Street's Fed. Equity Prac. vol. 2, § 1020.

"The cross-bill must, so it is held, be germane to the original bill. It must be confined to the same matters as the original bill, and it cannot introduce a new controversy not embraced in the original bill." Street's Fed. Eq. Prac. vol. 2, § 1030.

This author lays down the further principle that a cross-bill is primarily a defense, and, being so considered, is confined to matters in

litigation in the original suit; otherwise, new matters might be introduced into a litigation by cross-suits without end; and still further says the same author, in section 1031:

"A cross-bill is bad that goes beyond the original bill, and states a cause of action foreign to the primary dispute. A cross-bill may allege new or additional facts not set forth in the original bill, and be germane to the subject-matter of the action. The introduction of new facts do not render a cross-bill objectionable, but the making of a foreign or multifarious issue."

Johnson Railroad Signal Co. v. Union Switch & Signal Co. (C. C.) 43 Fed. 331, holds as well settled the rule that a cross-bill cannot introduce any new or distinct matter not within the scope of the original bill, nor such matter as is not necessary as a defense to the original bill or is foreign to the primary controversy. A cross-bill which seeks no discovery and sets up no defense, except such as would be available by answer, is bad. Street, Fed. Eq. Prac. vol. 2, § 1022. See, also, Miller v. Rickey (C. C.) 146 Fed. 577.

In Railway Co. v. United States, 101 U. S. 639, 25 L. Ed. 1074, it is held that a cross-bill cannot be used to bring in new and distinct matters, and in support the court cites in that case Ayers v. Chicago, 101 U. S. 184, 25 L. Ed. 838. A cross-bill must grow out of the original suit. It cannot bring in new and distinct matters. Rubber v. Goodyear, 9 Wall. 788, 19 L. Ed. 566, and Cross v. Del Valle, 1 Wall. 5, 17 L. Ed. 515. In this last case it is said by the court:

"That a cross-bill is a mere auxiliary suit, and a dependency of the original. It may be brought by a defendant against the plaintiff in the said suit, or against other defendants, or against both; but it must be touching the matters in question in the bill."

A cross-bill cannot introduce a new controversy, which it is not necessary to be decided in order to have a final decree on the case presented by the original bill. A cross-bill is "a proceeding to procure a complete determination of a matter already in dispute." 2 Dan. Ch. Pr. 1549, and note 2. The matter in dispute, as disclosed by Fulton's bill, was only specific performance of Marshall's contract. Suppose, for the sake of the argument, that Marshall had been the moving party, and had filed his bill against Fulton for specific performance of the contract of sale; no one would contend that Patton and Evans would have been either necessary or proper parties, for in the broadest view they had no interest which a decree against Fulton compelling him to carry out his contract could affect. Then how can they be necessary parties to a decree requiring Marshall to accept the balance of the purchase money and make title to Fulton in compliance with the terms of the contract which the latter's bill seeks to have specifically performed? We feel constrained in answer to this question to hold that Patton and Evans were not necessary or proper parties to Fulton's bill. They had no interest in the subject-matter of controversy between Fulton and Marshall, nor in any controversy which might arise between defendants themselves within the scope or the purposes of the original bill. Following, therefore, in the line which we have pursued in discussing this case, and relying upon the authorities and decisions which we have cited, it is our conclusion that Marshall could not

by his cross-bill make Patton and Evans parties defendant to Fulton's bill.

So far as appellant's first assignment of error is concerned, we might stop here; but there is another view presented by counsel which we must admit carries with it some force, and that is that Marshall's cross-bill, undertaking as it does to introduce into Fulton's suit new parties defendant against whom Marshall alone seeks relief, gives to his pleading the character of an original bill, and, this being so, that the essential element, to wit, diverse citizenship, as between Marshall and the new defendants, is wanting, and therefore the Circuit Court of the United States is without jurisdiction. As will be seen, Marshall and Patton and Evans are all citizens of West Virginia. If a cross-bill assumes the character of an original bill, it will be dismissed if wanting in the element of diverse citzenship which will be necessary to give jurisdiction to the Circuit Court of the United States. Cross v. Del Valle, supra. See, also, Delaware, L. & W. R. Company v. Jersey City (C. C.) 168 Fed. 128.

Appellants' second assignment of error is based upon the proposition that the Circuit Court was without jurisdiction to enjoin proceedings in the action at law which Patton and Evans had brought against T. Marcellus Marshall in the state court. It will be observed that, when Marshall filed his cross-bill in the Fulton suit, the action at law brought by Patton and Evans against him in the state court had been pending nearly three years. Marshall had entered his plea of nonassumpsit, and had thereby raised an issue which the plaintiffs were entitled to have tried by a jury. It is also a fact, as appears in the record, that in the Fulton suit in the Circuit Court, which had also been pending for the same length of time, Marshall had filed his answer, to which Fulton had on the 28th day of June, 1904, made replication. This case was, therefore, at issue, and a decree for the parties to take testimony had been entered. In this situation, Marshall, by his cross-bill, was permitted to bring in Patton and Evans as parties defendant to the Fulton bill in the Circuit Court, and by a decree of that court to enjoin them from proceeding with their action at law in the state court. The decree of the Circuit Court, therefore, had not only the effect to deprive Patton and Evans of their right to have the issue of fact raised by the pleadings in their suit against Marshall tried by jury, but at the same time the injunction issued by a court of the United States stayed a proceeding properly instituted and pending in a state court of West Virginia.

We do not deem it necessary to discuss the right of trial by jury, but will pass on to the second proposition; that is, that by the injunction issued in this case the suit of Patton and Evans against Marshall, pending in a state court, was stayed. There can be no doubt of the power of the courts of the United States in the exercise of their equity jurisdiction to issue the writ of injunction. This power is inherent in the courts themselves, and is also amply secured by statutes which authorize them to issue all writs necessary for the exercise of their respective jurisdictions. Upon this general power, however, there is one important limitation, and that is by virtue of section 720 of the Revised Statutes, which declares:

"The writ of injunction shall not be granted by any court of the United States to stay proceedings in any court of a state, except in cases where such injunction may be authorized by any law relating to proceedings in bankruptcy."

The Supreme Court of the United States has passed upon this statute in a number of cases, notably in the case of Peck et al. v. Jenness et al., 48 U. S. 612, 12 L. Ed. 841. In that case the Supreme Court, speaking through Mr. Justice Grier, says:

"Act Cong. March 2, 1793, c. 66, § 5, declares that a writ of injunction shall not be granted 'to stay proceedings in any court of a state.' In the case of Diggs v. Wolcott, 4 Cranch, 179, 2 L. Ed. 587, the decree of the Circuit Court had enjoined the defendant from proceeding in a suit pending in a state court, and this court reversed the decree, because it had no jurisdiction to enjoin proceedings in a state court."

Following in line with this decision, the Supreme Court again, through Mr. Justice Bradley, in Haines et al. v. Carpenter et al., 91 U. S. 254, 23 L. Ed. 345, says:

"In the first place, the great object of the suit is to enjoin and stop litigation in the state courts, and to bring all the litigated questions before the Circuit Court. This is one of the things which the federal courts are expressly prohibited from doing. By the act of March 2, 1793, it was declared that a writ of injunction shall not be granted to stay proceedings in a state court. This prohibition is repeated in section 720 of the Revised Statutes, and extends to all cases except where otherwise provided by the bankrupt law. This objection alone is sufficient ground for sustaining the demurrer to the bill."

There are other decisions of the Supreme Court in point upon this question, but we will not pursue the discussion further than to say that there are, it is true, some cases constituting exception to the general doctrine announced in the authorities we have cited. See Deizsch v. Huidekoper, 103 U. S. 494, 26 L. Ed. 497, in which Kern v. Huidekoper, 103 U. S. 485, 26 L. Ed. 354, is cited and approved, and French v. Hay, 22 Wall. 250, 22 L. Ed. 854, reaffirmed. Our case, however, is not within the exception, as a perusal of the opinions of the Supreme Court in the cases named will abundantly show.

It is our conclusion, therefore, that there was error in the decree of the Circuit Court, and that it should be reversed. The case is remanded, to the end that Marshall's cross-bill, so far as it concerns Patton and Evans, may be dismissed, and the injunction against them dissolved.

Reversed.

(173 Fed. 612.)

SIMERSON v. ST. LOUIS & S. F. R. CO.

(Circuit Court of Appeals, Eighth Circuit. October 15, 1909.)

No. 2,957.

1. MASTER AND SERVANT (§ 252*)—NEGLIGENCE OF FELLOW SERVANTS—KANSAS RAILROAD STATUTE.

Gen. St. Kan. 1905, §§ 6312, 6313, which make railroad companies liable for injuries to or the death of employés through the negligence of fellow servants, "provided that a notice in writing that an injury has been sustained, stating the time and place thereof, shall have been given by, or on behalf of, the person injured to such railroad company within eight months after the occurrence of the injury," create a new liability and confer a new right not before existing in the state, both conditioned, however, on the giving of the stated notice, which is an essential condition precedent to the right to maintain an action on such statute; and the necessity of such notice is not obviated by the fact that the action is commenced within eight months after the injury occurred.

[Ed. Note.—For other cases, see Master and Servant, Cent. Dig. § 806; Dec. Dig. § 252.*]

2. TRIAL (§ 169*)—DIRECTION OF VERDICT—GROUNDS OF MOTION.

The objection that a plaintiff did not give a notice which was an essential condition precedent to the right to bring the action need not be pleaded, but may be made on motion for a directed verdict at the close of the proof.

[Ed. Note.—For other cases, see Trial, Dec. Dig. § 169.*]

In Error to the Circuit Court of the United States for the District of Kansas.

Action by Annie Simerson against the St. Louis & San Francisco Railroad Company. Judgment for defendant on directed verdict, and plaintiff brings error. Affirmed.

P. C. Young, for plaintiff in error.

R. R. Vermilion (W. F. Evans, on the brief), for defendant in error.

Before HOOK and ADAMS, Circuit Judges, and CARLAND, District Judge.

ADAMS, Circuit Judge. This was an action by the widow of John Simerson, on behalf of herself and her two minor children, for damages occasioned by the death of her husband, caused by the negligent acts of his co-employés while they were working together as a switching crew in the yards of defendant railroad company in Neodesha, Kan. The Circuit Court at the close of plaintiff's case, it not having appeared, among other things, that any notice of injury had been given to the railroad company prior to the institution of the suit, directed a verdict for the defendant. Plaintiff prosecutes error.

In the view we take of this case, only one of the several questions argued need be decided, and that is whether under the laws of Kansas this suit was maintainable without a prior notice to the railroad company of the injury sustained. This suit was brought in 1906 under the provisions of section 6312 of the General Statutes of Kansas of 1905. This section embraces the fellow-servant law of 1874 (Laws 1874, p. 143, c. 93), as amended by the addition of the proviso by the act of March 4, 1903 (Laws Kan. 1903, p. 599, c. 393), and, as amended (Laws 1905, p. 566, c. 341), is in the following words:

"Every railroad company organized or doing business in the state of Kansas shall be liable for all damages done to any employé of said company in consequence of any negligence of its agents, or by any mismanagement of its engineers or other employés, to any person sustaining such damage: Provided, that notice in writing that an injury has been sustained, stating the time and place thereof, shall have been given by or on behalf of the person injured to such railroad company within eight months after the occurrence of the injury."

Section 6313 discloses that the prior section is applicable to a case where the person injured dies and damages resulting from his death are claimed by others. Prior to these enactments the rule of nonliability of the master to the employé for the carelessness of a fellow servant, originally declared in Priestly v. Fowler, 3 Mees. & Welsb. 1, and first applied in this country in Murray v. South Carolina Railroad Co., 1 McMul. (S. C.) 385, 36 Am. Dec. 268, and Farwell v. Boston & Worcester R. Co., 4 Metc. (Mass.) 49, 38 Am. Dec. 339, prevailed in the state of Kansas. Before then the death of an employé occasioned by the negligent acts of his fellow servant created no liability whatsoever against the employer. These enactments, therefore, in so far as railroad companies and their employés are concerned, created a new liability and conferred a new right before then unrecognized in that state. The Legislature, which created the liability and conferred the right, could, of course, determine and fix their bounds and subject them to conditions. If it saw fit to impose a condition or limitation upon the incurrence of the liability or the enjoyment of the right, it rested exclusively in its sovereign will to do so. These most obvious reflections have found expression in many cases unnecessary to be mentioned, and particularly in Lange v. Union Pac. R. Co., 126 Fed. 338, 62 C. C. A. 48 and Denver & R. G. R. Co. v. Wagner, 167 Fed. 75, 92 C. C. A. 527, decided by this court, and Swisher v. Railway Co., 76 Kan. 97, 90 Pac. 812, decided by the Supreme Court of the state of Kansas.

It seems to us very plain that the liability created by the Kansas statute in force when Simerson was killed and the right to assert that liability were conditioned upon the giving of the notice specified in the statute. The Legislature in most apt words conditioned, not the remedy, but the incurrence of the liability itself, upon the giving of a certain notice to the railroad company against whom liability should be asserted. Whether the specified condition was reasonable or unreasonable, the requiring of it was clearly within the competency of the Legislature. But its reasonableness is obvious. The large number of employés of most railroad companies, their distribution over wide areas of territory, the frequency of accidents occasioned by their carelessness at places far removed from general offices, well justified the requirement of a notice of the time and place of the injury, in order that the company might ascertain the true facts of the case while fresh in the memory of witnesses, and before they should be scattered so as to be unavailable, and, of more consequence still, in order that the company might have an opportunity to intelligently consider and settle the claims without incurring the expense of court proceedings. All these and other considerations which will readily occur to the mind

well warranted the Legislature in making a preliminary notice of the time and place of the injury a condition precedent to liability. By the plain language of the statute the giving of the notice is as necessary an element of the creation of liability as the negligence of the fellow servant itself is. The proof of the one is therefore as indispensable to constitute a cause of action as the proof of the other.

But it is said that the present suit was brought within the time the notice was required to be given, and is itself a sufficient compliance with that requirement. To this we are unable to give our assent. The plaintiff's right to recover depended upon her right at the inception of the suit, and, if the right was conditioned upon the existence of any fact, its existence should have been pleaded and proved, or the right was not made to appear. American Bonding & Trust Co. v. Gibson County, 145 Fed. 871, 76 C. C. A. 155. In Veginan v. Morse, 160 Mass. 143, 35 N. E. 451, in a case in which the requirement of notice was held to constitute a condition precedent to the right to bring an action, it was held, Holmes, Judge, now Associate Justice of the Supreme Court, delivering the opinion of the court, that the commencement of the action without having first given the required notice availed nothing, and that such suit could not be maintained. See, also, Thompson v. Southern Coal Co., 15 N. S. Wales, L. R. 162, and its citations. Cases are called to our attention where the requirement of a demand before suit is maintainable is held to be complied with by the institution of the suit itself; but cases of this kind are generally controlled by statutes which determine the character of the demand and do not condition the right itself. They are, therefore, inapplicable to our present inquiry. Other cases are called to our attention which arise under statutes which do not make the giving of a notice a condition precedent to the accruing of the right, but rather akin to the statute of limitations which affect the remedy. They are likewise inapplicable to the present case.

The contention that the defendant could not avail itself of the want of notice in this case without a special plea setting it up is untenable. The motion for a directed verdict at the close of the proof, on whatever ground it may have been argued, raised a question of law whether, giving full force and effect to all the facts proven, a cause of action had been made out under the law. Denver & R. G. R. Co. v. Wagner, supra.

It results that the judgment of the Circuit Court was right, and must be affirmed.

(173 Fed. 361.)

WESTINGHOUSE ELECTRIC & MFG. CO. v. WAGNER ELECTRIC & MFG. CO.

(Circuit Court of Appeals, Eighth Circuit. August 16, 1909. Rehearing Denied October 18, 1909.)

No. 2,857.

1. PATENTS (§ 328*)—INFRINGEMENT—ELECTRICAL CONVERTER.

The Westinghouse patent, No. 366,362, claim 4, for the combination, substantially as described, of an electric converter constructed with open spaces in its core, an inclosing case, and a nonconducting fluid or gas in said case, adapted to circulate through said spaces and about the converter for the purpose of cooling the same, construed, and *held* not infringed by a converter in which spaces were left between the coils, and between them and the inclosing case, for containing a cooling liquid, but which had no open spaces in its core; that being an essential element of the patented combination.

[Ed. Note.—For other cases, see Patents, Dec. Dig. § 328.*]

2. PATENTS (§§ 312, 318*)—INFRINGEMENT—PROFITS RECOVERABLE—BURDEN OF PROOF.

Where an infringing article contains a material and substantial improvement over that of the patent, the patentee is not entitled to recover all of the profits made by the infringer, but only such as resulted from the use of the infringing parts, and the burden rests upon him to separate the profits arising therefrom by reliable and tangible evidence; nor does the fact that the infringer kept no separate account of such profits relieve him from such burden, where the books were so kept before there was any knowledge or belief of infringement, and without reference thereto.

[Ed. Note.—For other cases, see Patents, Cent. Dig. §§ 545, 572, 573; Dec. Dig. §§ 312, 318.*

Accounting by infringer for profits, see note to Brickill v. Mayor, etc., of City of New York, 50 C. C. A. 8.]

Sanborn, Circuit Judge, dissenting.

Appeal from the Circuit Court of the United States for the Eastern District of Missouri.

For opinion below, see 129 Fed. 604.

Thomas B. Kerr and Paul Bakewell (Drury W. Cooper and Bakewell & Cornwall, on the brief), for appellant.

A. C. Fowler and Chester H. Krum, for appellee.

Before SANBORN and VAN DEVANTER, Circuit Judges, and RINER, District Judge.

RINER, District Judge. This was a bill in equity filed by the appellant, Westinghouse Electric & Manufacturing Company, in the Circuit Court of the United States for the Eastern District of Missouri. The bill charges the appellee, Wagner Electric & Manufacturing Company, with infringement of letters patent of the United States, No. 366,362, dated July 12, 1887, issued to George Westinghouse, Jr., and by him assigned to the appellant. The patent relates to improvements in electrical converters or transformers, and the bill prayed for an injunction and an accounting. The general nature and object of the invention is thus stated by the patentee:

"The invention relates to the construction of a class of apparatus employed for transforming alternating or intermittent electric currents of any required character into currents differing therefrom in certain characteristics. Such apparatus are usually termed 'induction coils' or 'converters.' The object of this invention is to provide a simple and efficient converter, which will not become overheated when employed for a long time in transforming currents of high electric motive force, and which will be thoroughly ventilated."

The following drawings, copied from the patent, show a cross-section and a longitudinal section of appellant's transformer:

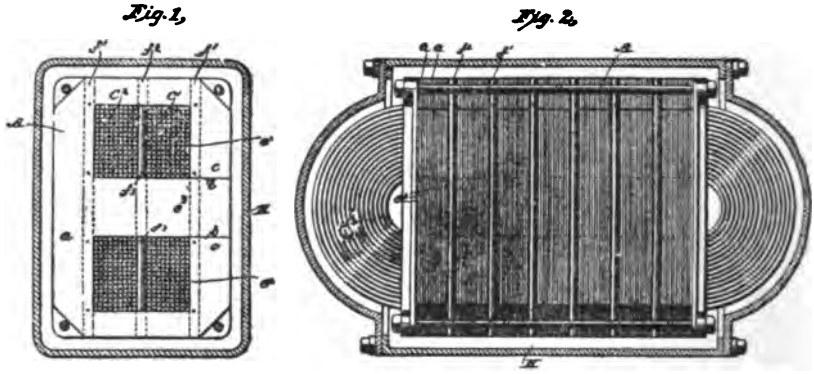

Having reference to the above drawings, the patentee, in describing the invention, says:

"Referring to the figures, A represents the core of the converter, and C^1 and C^2 the respective coils. The core is preferably composed of thin plates of soft iron, a, a, separated individually or in pairs from each other by thin sheets of paper or other insulating material. This insulating material is preferably applied to one surface of the plates by being glued or pasted thereto, and these surfaces may lie all in the same direction, thus separating the plates individually, or alternate plates may have their covered surfaces in one direction and the intervening plates have their covered faces in the opposite direction, thus magnetically separating the plates in pairs. The plates are preferably constructed with two rectangular openings, e^1 and e^2, through which the wires pass. For convenience in inserting the coils, or rather in applying the plates to the coils after the latter have been wound, a cut is made from each opening, as shown at b, b. By bending the ends, c, c, upward, the plates may then be thrust into position, and the ends, c, c, then close about the coils. The tongues, e^3, of succeeding plates, are preferably inserted from opposite sides. I do not, however, herein broadly claim an induction coil having its core constructed of thin plates formed in the manner just described; but such invention is claimed in an application of even date herewith, filed by Albert Schmid. Each group of—say five or six—plates thus applied is preferably separated from the succeeding group by air-spaces. These may be produced by passing tubes, f^1, f^1, which may be of soft iron or other metal, or of vulcanized fiber, along the lengths of the plates. It may be sufficient in other instances to block the group of plates apart at intervals, instead of extending the tubes the entire length. Preferably, also, the primary and secondary coils, C^1, C^2, are separated from each other in a similar manner. In this instance blocks or tubes, f^2, of nonconducting materials, are used. The tubes may be perforated, as shown at f^3, f^3. Where the converter is to be used in open air, the tubes, f^1 and f^2, would permit a free circulation of air, and thus aid in keeping the converter cool. It may be preferred in some instances to surround the converter with some oil or paraffine, or other suitable material, which will assist in preserving insulation and will not be injured by heating. This material,

when in a liquid form, circulates through the tubes and the intervening spaces of the coils and plates, and preserves the insulation, excludes the moisture, and cools the converter. The entire converter may be sealed into an inclosing case, H, which may or may not contain a nonconducting fluid or a gas."

The patent contains five claims, but the bill charges infringement of claim 4 only, which reads:

"The combination, substantially as described, of an electric converter constructed with open spaces in its core, an inclosing case, and a nonconducting fluid or gas in said case adapted to circulate through said spaces and about the converter."

This claim was adjudged valid in Westinghouse Electric & Mfg. Co. v. Union Carbide Co. (C. C.) 112 Fed. 417, and 117 Fed. 495, 55 C. C. A. 230, hereafter referred to as the Carbide Case, and in Westinghouse Electric & Mfg. Co. v. American Transformer Co. (C. C.) 130 Fed. 550, and its validity was also recognized by the Circuit Court in this case. In the foregoing cases it was decided that most, if not all, of the elements of the combination of claim 4 were old in the art; but, the combination being new, it was held patentable, and in this view we concur. The appellee manufactured and sold two types of transformers—the device involved in the carbide suit, which was there held to be an infringement of claim 4 of appellant's patent, and the device referred to in the record as "Type M." Both are claimed by appellant to be infringements of claim 4 of its patent.

The court below found that appellee's type M device did not infringe claim 4 of appellant's patent, and referred the cause to a master to take and state an account of the "profits, gains, and advantages" received by the appellee, together with all damages suffered by the appellant by reason of the manufacture and sale by the appellee of the transformer held in the Carbide suit to be an infringement of claim 4 of the patent. Upon the incoming of the master's report, exceptions were filed thereto by the appellee, the exceptions sustained, and a decree awarding appellant nominal damages only was entered. Two questions are presented for decision: First. Did appellee's transformer, type M, infringe claim 4 of appellant's patent? Second, what is the proper measure of recovery upon the accounting? These questions will be considered in the order stated.

The appellee's transformer, decided in the Carbide suit to be an infringement of the appellant's patent, had open spaces, not only between the coils and between the coils and the core, but also open spaces in the core, and as to that device it is admitted in the answer that the decision in that case is res adjudicata and that a permanent injunction should be granted; but the answer denies that the other type of transformer involved in this suit, known as "Type M," is an infringement of claim 4 of plaintiff's patent, and the appellee insists that, while its transformer, type M, the only one manufactured by it since the decision in the Carbide suit, has open spaces between the coils, and between the coils and the core, it has no open spaces in the core, within the meaning of claim 4 of appellant's patent, and that the open spaces in the core are one of the principal elements of the combination of the claim in suit, and therefore its type M device is not an infringement. Thus the question is presented whether the open spaces between the

coils, and between the coils and the core, found in appellee's device, type M, can be said to be open spaces in the core, within the meaning of claim 4 of appellant's patent. It is not contended that the rectangular openings in the core for the purpose of admitting the coils come within the claim; but it is insisted by appellant that the open spaces between the coils, and between the coils and the core, are open spaces in the core, within the meaning of the claim we are now considering.

That claim is for a combination, and the rule by which we are to be governed in the determination of the question presented is clearly stated in Water Meter Co. v. Desper, 101 U. S. 332, 25 L. Ed. 1024, as follows:

"It is a well-known doctrine of patent law that the claim of a combination is not infringed if any of the material parts of the combination are omitted. It is equally well known that if any one of the parts is only formally omitted, and is supplied by a mechanical equivalent, performing the same office and producing the same result, the patent is infringed."

And again, in the same case, the court said:

"Our law requires the patentee to specify particularly what he claims to be new, and, if he claims a combination of certain elements or parts, we cannot declare that any one of these elements is immaterial. The patentee makes them all material by the restricted form of his claim. We can only decide whether any part omitted by an alleged infringer is supplied by some other device or instrumentality, which is its equivalent."

In Westinghouse Electric & Mfg. Co. v. American Transformer Co., supra, the Circuit Court for the District of New Jersey, in contrasting the several claims of the patent, one with another, for the purpose of more certainly ascertaining the meaning of claim 4, said:

"* * * The 'spaces' of claim 4 are 'open spaces in its core.' The 'open space' of claim 1 is that intervening between 'parallel primary and secondary coils.' The combination of claim 2 has as its elements, first, primary and secondary coils; second, a core composed of laminæ of soft iron arranged in groups; and, third, 'open spaces' separating said groups. This claim, aside from the coils, specifically refers to the construction of the core, but lacks the elements of 'an inclosing case' and 'a nonconducting fluid or gas in said case adapted to circulate through said spaces and about the converter,' included in the combination of claim 4. The elements of the combination of claim 3 are, first, a core composed of soft iron plates arranged in groups and, second, 'open tubes,' intervening. This claim specifically refers to a particular construction of the core, but, like claim 2, lacks two of the elements of claim 4. Claim 5 includes the following elements: First, primary and secondary coils; second, a core composed of magnetically separated laminæ of soft iron arranged in groups; third, 'air spaces' separating the different groups from each other; and, fourth, the arrangement of the laminæ of the several groups in different parallel planes. This claim also specifically refers to a particular construction of the core, but, like claims 2 and 3, lacks the same two elements of claim 4. In the combination of claim 4 'open spaces in its core' as well as an 'inclosing case' and 'a nonconducting fluid or gas' therein, are 'substantially as described.' No doctrine of equivalency can dispense with the open spaces in the core of the transformer, for they are a necessary element of the combination. Without them the claim cannot be satisfied. Open spaces might be produced in the core, other than those specifically set forth in the drawings or description, which would be the equivalent of the latter. The core itself might, for instance, be cut into in various directions in such manner as to expose what may be termed internal heat-dissipating surfaces to the oil or other medium surrounding the transformer, and in such case, the other requirements of the combination being satisfied, infringement could be found. But the essence of

the first element of the claim insisted on is that the open spaces of the transformer must be 'in its core.'"

And, in passing upon this question in the present case, Judge Adams, then presiding in the Circuit Court, said:

"These numerous parallel open spaces so shown in the drawings and model, and any other open spaces, whether parallel or not, cutting through the body of the surrounding core and extending into the interior opening containing the coils, are, in my opinion, the 'open spaces in its core' contemplated by claim 4. The purpose of these open spaces, as disclosed by the patent and the evidence of experts, is to permit the oil to so bathe the heat-producing surfaces of the transformer, and to so circulate throughout the parts of the transformer, as to preserve the insulation of the coils, and radiate the heat generated by the transformer's action. The use of oil or paraffine in a tank inclosing the transformer for the purposes just specified has been long known to the art, and is recognized by at least two patents prior in date to complainant's patent. Accordingly, the invention has for its main purpose only the physical means for effectually securing this circulation of oil. It deals with the core itself, and divides it up into groups of plates, each group separate from the other in such way as to make numerous parallel open spaces in the core leading from its outer surface on all its four sides into the interior opening made for the introduction of the coils. This interior opening, called in the patent 'two rectangular openings, e^1 and e^2, through which the wires pass,' is not, in my opinion, 'an open space in its core,' within the meaning of claim 4. I adopt the views of Prof. Nipher with respect to this rectangular opening. He says: 'The core is not the core of a transformer or converter until these rectangular openings are made through it.' He says further: 'These openings give character to the core.' 'It is not a core until they exist there.' 'The core is in fact given such a form that it surrounds the coil in a certain sense, and the space so surrounded by the core might be called a coil opening.' The core of a transformer is the iron part of it. It must be so constructed as to permit the introduction of the coils of wire approximately through its center. The wire coil must be put in to make a transformer. I cannot understand how this space left in the inside of the iron for this purpose can be an open space in the core. It might be as well said that the space left on the outside of the iron, between it and the incasing tank, is an open space in the core. The defendant's device has a space between the coils, and has also this rectangular opening for the introduction of the coils into the core; but, for the reasons above expressed, these are not 'open spaces in its core,' within the meaning of the patent in suit." 129 Fed. 604.

As already suggested, if we understand appellant's contention, it is that the term "open spaces in the core," in claim 4 of its patent, includes and means spaces between the coils, and between the coils and the core, or that such spaces are the equivalent of spaces in the core. But the trouble with this suggestion is that the claim in suit describes no such spaces, and by its particularization impliedly excludes them. In that claim the patentee describes a combination consisting of certain enumerated elements, and by that enumeration he is bound.

The Circuit Court held that the open spaces in the core, as described in claim 4, and the open spaces between the coils and between the coils and the core, were physically different things; and that this is so is apparent, we think, from an examination of the patent as a whole. As we fully concur in the conclusion reached by the Circuit Court, that the appellee's device, type M, does not infringe claim 4 of appellant's patent, we pass to the second question, namely, the measure of recovery upon the accounting for the admitted infringement which is predicated upon the type of transformer involved in the Carbide Case.

At the conclusion of the appellant's case the appellee demurred to the evidence, on the ground that, under the showing then made, appellant was entitled to nominal damages only. The demurrer was overruled by the master. The appellee then introduced evidence, and the cause was submitted. The master found that each and every part of claim 4 of appellant's patent was old, with the exception of the air-tight inclosing case; that the patentee made a wholly new combination described in claim 4 of his patent; that this new combination constituted an entirely new transformer, complete in itself; that it was infringed in its entirety by appellee's transformer; that the entire commercial value of the infringing transformers manufactured and sold by the appellee during the time concerned in the accounting was due to the presence therein of the combination described in claim 4 of appellant's patent; that the profits made by the appellee on the infringing transformers were merged in the profits of its general business, so that it was impossible to separate them; that the appellee kept no separate account of the manufacture of the infringing transformers, and did not know and could not furnish the cost of the manufacture of them, nor even an estimate of such cost; that the business of the manufacture and sale of the infringing transformers was so intermingled and confused with appellee's general business that approximate results only would be possible; that the profits realized by the appellee from the manufacture and sale of the infringing transformers, as nearly as it could be reached through "estimates, comparisons, and apportionments," were approximately 25 per cent. on the net amount of sales of the infringing transformers; that the gross sales, after deducting commissions, amounted to $874,060.15; that the labor and material amounted to $529,733.43; that the factory cost amounted to $211,893.37; that the profits realized were $134,433.35; and he recommended that a decree be entered in favor of appellant and against the appellee for that amount.

Exceptions were filed to the findings and recommendation of the master, and upon final hearing the court disapproved the report of the master, sustained the exceptions to his findings and recommendation, and in lieu of the decree recommended by the master entered one allowing appellant nominal damages only. The opinion, to which reference was made in the decree, discloses that the court was of opinion that the patented combination of the appellant was only a part of the infringing transformer manufactured and sold by the appellee; that the appellant was not entitled to the entire profits realized by the appellee from that transformer, but only to so much of the profits as was due to the presence in that transformer of the patented combination; that the burden was upon the appellant to show by competent evidence how much of the entire profits was due to the use of its combination; that the appellant had failed to sustain the burden so resting upon it, and the evidence for the appellee threw no light upon the subject; and that the master's findings and recommendation proceeded upon the erroneous theory that, in that situation, the appellant could recover the entire profits realized by the appellee from the infringing transformer, regardless of what portion of those profits arose from the

use of the appellant's patented combination. We are unable to concur in the master's findings. We think claim 4 is a limited detailed claim —open spaces in the core being one of its chief or distinguishing features. This was the view entertained by Judge Amidon upon an application for a temporary injunction, and by Judge Adams at the hearing upon which the case was referred to the master. 129 Fed. 604. See, also, Westinghouse Electric & Mfg. Co. v. Union Carbide Co., 117 Fed. 495, 55 C. C. A. 230; Westinghouse Electric & Mfg. Co. v. American Transformer Co. (C. C.) 121 Fed. 560, 130 Fed. 550.

The evidence clearly shows, we think, that the thing principally to be desired in the construction of a transformer is to keep the coils, rather than the core, from becoming overheated. The appellant's patent, claim 4, seems to have proceeded upon the idea that the thing principally to be accomplished was to keep the core from becoming overheated, and to that end it provided that one element of the combination covered by claim 4 was to be the open spaces in the core; nothing whatever being said in that claim about open spaces between the coils, or about open spaces between the core and the coils. Bearing in mind that the thing desired is to prevent the overheating of the coils, it will be seen that appellant's combination, claim 4, operates to that end only in so far as the core, if becoming overheated, would have a tendency to heat the coils. The appellee, in our view, improved upon appellant's device by providing, in addition to spaces in the core, for spaces between the coils and spaces between the core and the coils, through which the oil or other cooling medium could circulate and thereby much more certainly and efficiently accomplish the purpose desired, viz., keeping the coils at a proper state of temperature. This, we think, was a material and substantial improvement on appellant's combination, claim 4. It must, of course, be conceded that while appellant's combination, claim 4, although really designed to keep the core from becoming overheated, also tended to keep the coils from becoming overheated; but the appellee's transformer much more efficiently accomplished the result desired by providing for a circulation of oil or other cooling medium through the open spaces between the coils, and between the core and the coils, as well as through the open spaces in the core. We conlude, therefore, that the master was in error in finding that the entire commercial value of the infringing transformers manufactured and sold by the appellee during the time concerned in the accounting was due to the combination described in claim 4 of appellant's patent.

And to the extent that the appellee has improved upon that which was covered by appellant's patent, claim 4, the appellant cannot demand the appellee's profits, because the only right of the appellant to complain of the appellee is in the use by the appellee of the patented combination, claim 4, and the only right which the appellant has to profits realized by the appellee is confined to such profits as resulted solely from the use of appellant's combination, claim 4; the profits resulting from the improvement made by the appellee being something in which the appellant has no interest. The evidence shows, we think, that the open spaces between the coils, and between the core and the

coils, performed a very substantial office, and that if added to spaces in the core would, as already suggested, necessarily accomplish the desired result more certainly and more efficiently. The patented device covered by claim 4, being, as we view it, a limited detailed claim, and not being generally for a circulatory system throughout the heat producing parts of the transformer, and the appellee's infringing transformer embracing something of value not covered by that claim, viz., open spaces between the coils, and between the coils and the core, we are of opinion that the appellant, whose patent covered only part of the infringing device, is not entitled to recover all the profits made by the appellee, but only such as resulted from the patented invention. Stirrat v. Excelsior Mfg. Co., 61 Fed. 980, 10 C. C. A. 216; Baker v. Crane, 138 Fed. 60, 70 C. C. A. 486; Robertson v. Blake, 94 U. S. 728, 24 L. Ed. 245; Garretson v. Clark, 111 U. S. 120, 4 Sup. Ct. 291, 28 L. Ed. 371.

The master's report shows that appellant offered no evidence upon the question of damages, but relied entirely upon the position that the amount which it was entitled to recover could be based upon the profits realized by the appellee from the sale of the infringing device. The master found that the appellee kept no separate account of its profits realized from its infringing device, but, on the contrary, that the profits made by appellee on the infringing transformers were merged with the profits of its entire business, so that it was impossible to separate them, and that the appellee did not know and could not furnish the cost of the manufacture of the infringing transformers, or even an estimate thereof. We do not think the mere failure to keep separate the profits derived from the infringing device, under the circumstances disclosed by the record, warrants the application of the equity rule that where one wrongfully mingles his goods with those of another, so that they are indistinguishable from the mass, the party injured is entitled to take the whole. This rule has been applied in cases of the invasion of a copyright, where the drongdoer has mingled in the book matter to which a copyright does not properly extend with matter covered by the copyright, "the two necessarily going together, when the volume is sold as a unit, and it being impossible to separate the profits on the one from the profits on the other, and the lawful matter being useless without the unlawful." Callaghan v. Myers, 128 U. S. 617, 9 Sup. Ct. 177, 32 L. Ed. 547.

There is no evidence tending to show that the appellant's failure to show how much of the appellee's profit resulted from the infringed combination and how much from the presence of the other elements of the infringing transformer was due to any refractory or deceitful conduct on the part of the appellee, such as destruction or hiding of the books, or refusal to produce them for the use of the appellant. The mere failure on the part of the appellee to keep an account separating the profits prior to the sustaining of appellant's patent and at a time when, as the record shows, appellee believed in good faith that it was not invading any right of the appellant, is not conduct which would render the appellee liable as a confuser of goods within the rule just stated, nor such conduct as would relieve appellant from the necessity of carrying the prescribed burden of proof. Seymour, et al. v. McCormick, 57 U. S. 480, 14 L. Ed. 1024. In Keystone Mfg. Co. v.

Adams, 151 U. S. 139, 14 Sup. Ct. 295, 38 L. Ed. 103, the Supreme Court, discussing a similar question, said:

"While it is undoubtedly established law that complainants in patent cases may give evidence tending to show the profits realized by defendants from use of the patented devices, and thus enable the courts to assess the amounts which the complainants are entitled to recover, yet it is also true that great difficulty has always been found, in the adjudicated cases, in applying the rule that the profits of the defendant afford a standard whereby to estimate the amount which the plaintiff is entitled to recover, and in defining the extent and limitations to which this rule is admittedly subject. Such a measure of damages is of comparatively easy application, where the entire machine used or sold is the result of the plaintiff's invention; but when, as in the present case, the patented invention is but one feature in a machine embracing other devices that contribute to the profits made by the defendant, serious difficulties arise. It is unnecessary, in this opinion, to review the numerous cases, some at law, others in equity, wherein this court has considered various aspects of this question. It is sufficient to say that the conclusions reached may be briefly stated as follows: It is competent for a complainant, who has established the validity of his patent and proved an infringement, to demand, in equity, an account of the profits actually realized by the defendant from his use of the patented device; that the burden of proof is on the plaintiff; that where the infringed device was a portion only of defendant's machine, which embraced inventions covered by patents other than that for the infringement of which the suit was brought, in the absence of proof to show how much of that profit was due to such other patents, and how much was a manufacturer's profit, the complainant is entitled to nominal damages only"—citing Seymour v. McCormick, 16 How. 480, 14 L. Ed. 1024; Rubber Co. v. Goodyear, 9 Wall. 788, 19 L. Ed. 566; Mowry v. Whitney, 14 Wall. 620, 20 L. Ed. 860; Elizabeth v. Pavement Co., 97 U. S. 126, 24 L. Ed. 1000.

In Garretson v. Clark, 111 U. S. 120, 4 Sup. Ct. 291, 28 L. Ed. 371, the Supreme Court quoted with approval a statement of the rule announced by the Circuit Court, as follows:

"The patentee must in every case give evidence tending to separate or apportion the defendant's profits and the patentee's damages between the patented feature and the unpatented features, and such evidence must be reliable and tangible, and not conjectural or speculative."

And upon this question the burden of proof is upon the complainant. If he fails to carry this burden, he is entitled only to nominal damages. In Tilghman v. Proctor, 125 U. S. 136, 8 Sup. Ct. 894, 31 L. Ed. 664, the court, in the course of its opinion, said:

"The infringer is liable for actual, not for possible, gains. The profits, therefore, which he must account for, are not those which he might reasonably have made, but those which he did make, by the use of the plaintiff's invention; or, in other words, the fruits of the advantage which he derived from the use of that invention over what he would have had in using other means than open to the public and adequate to enable him to obtain an equally beneficial result. If there was no such advantage in his use of the plaintiff's invention, there can be no decree for profits, and the plaintiff's only remedy is by an action at law for damages."

Here the appellant failed to prove by reliable or tangible evidence that the entire value of the infringing transformer as a marketable article was properly and legally attributable to appellant's patented combination embodied therein, and so, in the light of the decisions above cited, and many others, which we have examined, announcing the same rule, we think that the appellant is entitled to recover nominal damages only; in other words, that as part only of the profits made by the

appellee are attributable to the appellant's combination, the balance being attributable to the presence in the infringing device of elements not included in that combination, and as the appellant failed to make proof of how much of the total profits was due to the presence of its combination in the infringing device, there is nothing upon which more than a nominal recovery could be grounded.

The conclusion reached is that the decree finding that the device, type M, without open spaces in the core, now manufactured by the appellee, does not infringe appellant's patent, and that the appellant is entitled to nominal damages only on account of the infringing device, must be affirmed.

SANBORN, Circuit Judge (dissenting). A clear conception of the desideratum, and of the root, principle, or mode of operation of an invention devised to attain it, is indispensable to a correct decision of a question of infringement, because that device or combination is the mechanical equivalent of another under the law of patents which accomplishes the desideratum in substantially the same way, although the devices differ in name, form, location, or shape. Machine Company v. Murphy, 97 U. S. 120, 125, 24 L. Ed. 935; Winans v. Denmead, 15 How. 330, 342, 14 L. Ed. 717; Blandy v. Griffith, 3 Fish. Pat. Cas. 609, 616, 3 Fed. Cas. 675,678. The claim of the invention involved in this case is:

"The combination, substantially as described, of an electric converter constructed with open spaces in its core, an inclosing case, and a nonconducting fluid or gas in said case adapted to circulate through said spaces and about the converter."

The specification of a patent, which forms a part of the same application as its claim, must be read and construed with it, to ascertain the true meaning and actual intent of the parties to the contract which the specification and the claim evidence, for the purpose of determining what the principle or mode of operation was which the parties intended to secure to the patentee. Seymour v. Osborne, 11 Wall. 516, 547, 20 L. Ed. 33; O. H. Jewell Filter Co. v. Jackson, 72 C. C. A. 304, 308, 140 Fed. 340, 344. Prior to the invention under consideration it had been impracticable to use converters cooled by the natural circulation of air which had a capacity of more than 10 kilowatts. But by the use of the patentee's combination, by means of which a circulation of oil through and around the converter in an inclosed case was effected, converters with a capacity of 500 kilowatts became serviceable and merchantable. The following terms of the specification show the object and the principle or mode of operation of the invention:

"The object of this invention is to provide a simple and efficient converter, which will not become overheated when employed for a long time in transforming currents of high electromotive force. * * * The core is preferably composed of thin plates of soft iron, a, a. * * * The plates are preferably constructed with two rectangular openings, e^1 and e^2, through which the wires pass. * * * Each group of—say five or six—plates thus applied is preferably separated from the succeeding group by air spaces. These may be produced by passing tubes, f^1, f^1, which may be of soft iron or other metal, or of vulcanized fiber, along the lengths of the plates. It may be sufficient in other instances to block the groups of plates apart at intervals, instead of extending

the tubes the entire length. * * * Preferably, also, the primary and secondary coils, C^1, C^2, are separated from each other in a similar manner. * * * It may be preferred in some instances to surround the converter with some oil or paraffine, or other suitable material, which will assist in preserving insulation and will not be injured by heating. This material, when in a liquid form, circulates through the tubes and the intervening spaces of the coils and plates, and preserves the insulation, excludes the moisture, and cools the converter. The entire converter may be sealed into an inclosing case."

The claim under consideration is restricted to the invention of the combination, substantially as described in this specification, of an electric converter with open spaces in its core, an inclosing case, and a non-conducting fluid or gas in the case adapted to circulate through the spaces in and about the converter. What was the object of this invention? The prevention of the overheating of the converter, and of every part of it. What was the root, the principle, or mode of operation whereby this object was to be attained? The circulation of oil in a sealed case over increased radiating surfaces "through the tubes and the intervening spaces of the coils and plates," whereby the converter is cooled, insulation is preserved, and moisture is excluded. In my opinion the principle of the invention patented under claim 4 is not either the rectangular openings across the planes of the iron plates, nor the tubes between the plates, nor the blocked spaces between them, nor the openings between the coils, nor any of the elements of the combination, all of which are described in the specification as preferably employed, but it is the circulation of the oil over increased radiating surfaces by means of the combination patented through open spaces in and about the converter, and what Westinghouse secured by this claim was, not the particular openings he specified as preferably made in the core or in the converter, but, as held by the Circuit Court of Appeals of the Second Circuit, in the decision upon which this and other suits for the infringement of this patent rest—

"the means by which the external and internal surface of the heat-producing parts of a converter were cooled by such an arrangement and separation of parts as would permit the circulation about them of oil, and the means for the retention of said oil within and about said surfaces whereby the heat from the oil radiated to the surrounding air." Westinghouse Electric & Mfg. Co. v. Union Carbide Co., 117 Fed. 495, 498, 55 C. C. A. 230.

The defendant first made and sold a converter with open rectangular spaces in the soft iron plates in which the coils were inserted, with open spaces between the plates, and with open spaces between the coils, and it was adjudged an infringement. It then made and sold a converter, called "Type M," with all the open spaces specified by the patentee except those between the plates, and with spaces between the coils and the plates, and it seeks to escape infringement because it has secured the requisite increased radiating surface by substituting the open spaces between the plates and the coils for the open spaces between the plates described by Westinghouse, while it retains all the other open spaces and details of his description. But the substance of this invention is the circulation of oil around and through increased radiating surfaces in a converter inclosed in a sealed case, and the locality in which the increased surfaces are placed and the forms in which they are embodied are immaterial upon the question of infringement,

because the principle or mode of operation is the same, whether the surfaces are exposed by openings between the iron plates through which the oil circulates to and along the coils from without or by openings between the iron plates and the coils through which the oil may pass. In either case the object of the invention is attained by the circulation of the oil over the increased radiating surfaces of a converter in a sealed case.

It is contended that the spaces between the coils and the plates are more efficient in cooling the coils which are more likely to become overheated than the plates. But in my opinion the evidence fails to sustain this contention, and if it were sustained the defendant could not escape infringement by appropriating and then improving the patented combination of the complainant. The spaces between the coils and the plates are the plain mechanical equivalents of the spaces between the plates, because they do the same work in the same way. They cool the converter by the circulation of the oil through them and over increased radiating surfaces in a closed case, and—

"If two devices do the same work in substantially the same way and accomplish the same result they are the same, even though they differ in name, form, or shape." Machine Company v. Murphy, 97 U. S. 120, 125, 24 L. Ed. 935.

"Where the whole substance of the invention may be copied in a different form, it is the duty of courts and juries to look through the form to the substance of the invention for that which entitled the inventor to his patent and which the patent was designed to secure. When that is found there is an infringement, and it is not a defense that it is embodied in a form not described and in terms claimed by the patentee." Winans v. Denmead, 15 How. 330, 342, 14 L. Ed. 717.

Because the open spaces between the coils and the plates, which the defendant substituted for the open spaces between the plates, were the mechanical equivalents of the latter, and because the defendant's type M was a copy of the whole substance of the complainant's invention, that converter seems to me to constitute an infringement of the fourth claim of the Westinghouse patent. Moreover, the limitation of the words "open spaces in the core" in this fourth claim to the open spaces between the plates of the core seems to me to be unwarranted by the claim and specification (1) because the spaces between the plates are the subject of a specific claim, No. 2 in this patent, and therefore these spaces are presumably not covered by the general claim of the combination which is here in suit; and (2) because the specification describes three other classes of open spaces in the core, to wit, "two rectangular openings, e^1 and e^2, through which the wires pass," "tubes, f^1, f^1, which may be of soft iron or other metal, or of vulcanized fiber, along the lengths of the plates," and the spaces between the coils, which "are separated from each other in a similar manner"—that is to say, by tubes or blocks between them. Not only this, but the open spaces between the plates are not claimed to be, and are not, an essential element of the combination of the fourth claim, but are expressly stated in the specification to be a mere preferable method of constructing the converter, so as to give it increased radiating surface. On this subject the specification reads:

"Each group of—say five or six—plates thus applied is preferably separated from the succeeding group by air spaces. These may be produced by tubes,

f^1, f^1. * * * It may be sufficient in other instances to block the group of plates apart at intervals, instead of extending the tubes the entire length."

The statute requires that the inventor shall point out the principle of his invention—

"and the best mode in which he has contemplated applying that principle, so as to distinguish it from other inventions; and he shall particularly point out and distinctly claim the part, improvement, or combination which he claims as his invention or discovery." U. S. Comp. St. 1901, § 4888.

A patent for a combination claimed secures the association of the elements specified, but does not claim or patent any of the elements or details of the specification. They are but a part of the preferable method pointed out, and one who takes and uses the principle and the whole substance of an invention, as the defendant has in its type M, may not escape infringement by the mere substitution of other obviously equivalent means or details for some of the means described by the patentee as a part of his preferable mode of applying his principle. Paper Bag Patent Case, 210 U. S. 405, 418, 28 Sup. Ct. 748, 52 L. Ed. 1122; Deering v. Harvester Works, 155 U. S. 286, 302, 15 Sup. Ct. 118, 39 L. Ed. 153; City of Boston v. Allen, 91 Fed. 248, 249, 33 C. C. A. 485, 486; Reece Button Hole Ma. Co. v. Globe Button Hole Ma. Co., 61 Fed. 958, 964, 10 C. C. A. 194, 200; Brammer v. Schroeder, 106 Fed. 918, 928, 930, 46 C. C. A. 41.

Turning to the question of damages for the infringement by the manufacture and sale of defendant's first converter, we are met by the claims that the complainant was entitled to no recovery because the defendant improved the patentee's combination by adding open spaces between the plates and the coils, and no evidence was produced which separated the profits attributable to that improvement from those derived from the patented combination, and because the defendant did not stand in the relation of a trustee of the profits for the patentee, and owed it no duty to keep them separate, or to account for them. There is some testimony in the record that the coils became more overheated than the plates, and that the open spaces between the coils and the plates tend to cool the former more efficiently than the spaces between the plates. But the spaces between the plates permit the oil to circulate between the plates against and around the coils, and the evidence of the superiority of the spaces between the coils and the plates fails to persuade my mind that the latter constituted any real improvement upon the mode described by the patentee. On the other hand, it leads me to believe that these new spaces and this theory concerning them constituted a mere subterfuge of the defendant, conceived to avoid a just liability for its infringement.

Moreover, the measure of the complainant's damages was not the difference between the profits the defendant would have derived from the complainant's combination and those it did derive from its form of it. It was the difference between the profits wihch the defendant derived from the use of the complainant's combination and those it might have derived from the use of any other combination then known and open to the public which would have produced an equally beneficial result. Tilghman v. Proctor, 125 U. S. 136, 146, 8 Sup. Ct. 894, 31

L. Ed. 664. And as there was no such combination or converter the alleged improvement was immaterial. The indisputable facts that converters that have a capacity between 10 kilowatts and 500 kilowatts were first made serviceable and merchantable by the complainant's combination, and that all the converters made and sold by the defendant were of this capacity and embodied the complainant's combination, lie conceded at the foundation of this case. Without the complainant's combination, whereby the oil was circulated in a sealed case through the intervening spaces of the coils and plates and around the converter, the defendant never could have used or sold one of its infringing transformers. In the light of these facts the master found that the entire commercial value of the infringing converters manufactured and sold by the defendant during the time concerned in the accounting was due to the complainant's combination. "The conclusions of the master, depending upon the weighing of conflicting testimony, have every reasonable presumption in their favor, and are not to be set aside or modified, unless there clearly appears to have been error or mistake on his part." Tilghman v. Proctor, 125 U. S. 136, 150, 8 Sup. Ct. 894, 31 L. Ed. 664; Metsker v. Bonebrake, 108 U. S. 66, 2 Sup. Ct. 351, 27 L. Ed. 654. And the evidence not only fails to disclose to my mind any error or mistake in the findings of the master, but compels my assent to his conclusion.

Is the complainant barred from the recovery of any of the profits the defendant derived from its infringement because it failed to separate those derived from its combination from those which the defendant otherwise derived from the infringement? It is settled rule that:

"Upon a bill in equity by the owner against infringers of a patent, the plaintiff is entitled to recover the amount of gains and profits that the defendants have made by the use of his invention. * * * The reasons that have led to the adoption of this rule are that it comes nearer than any other to doing complete justice between the parties; that in equity profits made by the infringer belong to the patentee, and not to the infringer; and that it is inconsistent with the ordinary principles and practice of courts of chancery, either, on the one hand, to permit the wrongdoer to profit by his own wrong, or, on the other hand, to make no allowance for the cost and expense of conducting his business, or to undertake to punish him by obliging him to pay more than a fair compensation to the person wronged. The infringer is liable for actual, not for possible, gains. The profits, therefore, which he must account for, are not those which he might reasonably have made, but those which he did make, by the use of the plaintiff's invention; or, in other words, the fruits of the advantage which he derived from the use of that invention over what he would have had in using other means then open to the public and adequate to enable him to obtain an equally beneficial result. * * * A court of equity which has acquired, upon some equitable ground, jurisdiction of a suit for the infringement of a patent, will not send the plaintiff to a court of law to recover damages, but will itself administer full relief by awarding, as a substitute for legal damages, a compensation computed and measured by the same rule that courts of equity apply to the case of a trustee who has wrongfully used the trust property to his own advantage. Root v. Railway Company, 105 U. S. 189, 214, 215, 26 L. Ed. 975." Tilghman v. Proctor, 125 U. S. 136, 144, 145, 146, 148, 8 Sup. Ct. 894, 31 L. Ed. 664.

Let us apply these rules to this case. The complainant is entitled to the fruits of the advantage which the defendant derived over what it would have had in using any other known converter then open to the

public and adequate to enable it to obtain an equally beneficial result. There was no other known converter open to the public which could be used to produce the result obtained by complainant's combination. The complainant was consequently entitled to all the profits and all the advantages derived from the defendant's use of the infringing machine. Crosby Steam Gage Valve Company v. Consolidated Safety Valve Company, 141 U. S. 441, 448, 449, 12 Sup. Ct. 49, 35 L. Ed. 809; Manufacturing Company v. Cowing, 105 U. S. 253, 26 L. Ed. 987.

The decisions present two classes of cases, each governed by its own measure of profits recoverable for an infringement. Where the patented device is a slight improvement upon an existing and operative machine, which accomplished the same result without as with the patented improvement, as in Garretson v. Clark, 111 U. S. 120, 4 Sup. Ct. 291, 28 L. Ed. 371, where the patented improvement was a slight change in the jaw of a well-known and operative mop head, Keystone Mfg. Co. v. Adams, 151 U. S. 139, 14 Sup. Ct. 295, 38 L. Ed. 103, where the improvement patented was a revolving winged shaft attached to an old operative and successful corn sheller to facilitate the movement of the corn into the sheller, and in Seymour v. McCormick, 16 How. 480, 14 L. Ed. 1024, where the improvement was a driver's seat upon an operative and successful harvesting machine, the profits from the sale or use of the entire machine, the entire mop head, the entire corn sheller, or the entire harvesting machine may not be recovered by the patentee; but his recovery is limited to the profits derived from the patented improvement to the operative machine only. And when a complainant has a patent upon improvements to a machine, parts of which are patented to others under prior grants, as in Blake v. Robertson, 94 U. S. 728, 24 L. Ed. 245, the recovery is likewise limited to the profits derived from the complainant's patented improvement separated from those derived from the improvements patented to others. But where the complainant's patent secures a new combination, or a new machine, which accomplishes a result never attained before it was invented, the entire profits derived from the infringing device are recoverable; for, since no combination or device existed before the invention by which the desired object could be attained, there is no combination or device but the inventor's to which the profits can be lawfully attributed. Crosby Steam Valve Company v. Safety Valve Company, 141 U. S. 441, 448, 449, 454, 12 Sup. Ct. 49, 35 L. Ed. 809; Brennan & Company v. Dowagiac Mfg. Co., 162 Fed. 472, 475, 89 C. C. A. 392, 395; Dowagiac Mfg. Co. v. Superior Drill Company, 162 Fed. 479, 481, 89 C. C. A. 399; Elizabeth v. Pavement Company, 97 U. S. 126, 24 L. Ed. 1000; Manufacturing Company v. Cowing, 105 U. S. 253, 26 L. Ed. 987; Hurlbut v. Schillinger, 130 U. S. 456, 9 Sup. Ct. 584, 32 L. Ed. 1011; Warren v. Keep, 155 U. S. 265, 15 Sup. Ct. 83, 39 L. Ed. 144; Ruggles v. Eddy, 20 Fed. Cas. No. 12,116; Zane v. Peck (C. C.) 13 Fed. 475; Fifield v. Whittemore (C. C.) 33 Fed. 835; Creamer v. Bowers (C. C.) 35 Fed. 206; Orr & Lockett Hdwe. Co. v. Murray, 163 Fed. 54, 56, 89 C. C. A. 492.

I am unable to escape the conviction that the case in hand falls

under the latter rule. The claim upon which this suit is founded is for a patented combination of old elements. It is not restricted to the open spaces between the plates, or to the inclosing case or to anything but the association of all the elements described and claimed. Neither the open spaces between the plates, nor the tubes, nor the plates, nor the coils, nor the oil, nor the spaces between the coils, nor any other detail of the combination, is patented by this fourth claim of the patent. Any one may use, without infringing this claim, not only these details, but also any one, or all but one, of the essential elements of the combination. The thing patented is one, single and entire. It is the combination of all the essential elements into the entire new converter which the combination produces. No one can infringe this claim of the patent who does not appropriate this entire new combination and this machine which that combination produces. And as this new combination and the converter it produces accomplished a result never attained before, a result that no known device or combination open to the public while the infringement here in controversy was continuing would produce, this case is not governed by the rule applicable to slight improvements on old machines which accomplished the same result before as after the patented improvement, illustrated by Garretson v. Clark, 111 U. S. 120, 4 Sup. Ct. 291, 28 L. Ed. 371, and other cases of that class; but the complainant is entitled to all the profits which the infringer derived from the appropriation of the new combination and machine. Brennan & Company v. Dowagiac Mfg. Company, 162 Fed. 472, 475, 89 C. C. A. 392; Yesbera v. Hardesty Mfg. Co., 92 C. C. A. 46, 166 Fed. 120, 125, and cases of that class cited above.

It appears to me, therefore, that the complainant was the owner of all the profits which the defendant derived from the manufacture and sale of the infringing converter, and that the defendant was in equity a trustee of those profits for the complainant. The Supreme Court declares that it is the established rule of the nation that in a case of this nature a court of equity will administer full relief by awarding "a compensation computed and measured by the same rule that courts of equity apply to the case of a trustee who has wrongfully used the trust property to his own advantage." Tilghman v. Proctor, 125 U. S. 136, 148, 8 Sup. Ct. 894, 31 L. Ed. 664. What is that rule? Chancellor Kent stated it in Hart v. Ten Eyck, 2 Johns. Ch. (N. Y.) 62, 108, in these words:

> "The rule of law and equity is strict and severe on such occasions. If a party, having charge of the property of others, so confuse it with his own that the line of distinction cannot be traced, all the inconvenience of the confusion is thrown upon the party who produces it, and it is for him to distinguish his own property or lose it."

The Supreme Court approved this statement of the rule in The Idaho, 93 U. S. 575, 576, 23 L. Ed. 978.

The primary duty of a trustee is to keep the property of his cestui que trust separate from his own, to keep an account of it, and to deliver it to the cestui que trust. This infringer kept no account of these profits, but mingled them with the profits of its general business, so that it was impossible for it, or for any one, to accurately separate them.

But the record contains persuasive evidence of the entire amount which the defendant received from the sale of the infringing converters, and that it customarily added to the cost of manufacture and sale a profit of 25 per cent. to make up its selling price. There is also persuasive evidence of the total amount received by the defendant from all its business during its infringing years and of the total profits derived from its business during these years. These are ample facts upon which to base a just and equitable finding of the amount of profits which the defendant derived from the sale of these infringing machines. The master has made a finding after a careful consideration of all the evidence upon the subject, and that finding is presumptively right. The indisputable facts that for years the defendant continued to infringe, until it had made and sold infringing machines from which it realized more than $800,000, are sufficient to satisfy the mind that its appropriation of the complainant's combination was profitable, and when to this is added the evidence that 25 per cent. of the cost was ordinarily added by it to make its selling price, it seems to me to be inequitable to permit the defendant to keep this property of the complainant, because it mingled it with its own, and thus allow it to take advantage of its own wrong. Of such a defense Lord Chancellor Brougham said in Docker v. Somes, 2 Myl. & Keene, 674:

"When did a court of justice, whether administered according to the rules of equity or law, ever listen to a wrongdoer's argument to stay the arm of justice grounded on the steps he himself had successfully taken to prevent his iniquity from being traced? Rather, let me ask, when did any wrongdoer ever yet possess the hardihood to plead, in aid of his escape from justice, the extreme difficulties he had contrived to throw in the way of pursuit and detection, saying: 'You had better not make the attempt, for you will find I have made the search very troublesome?' The answer is: 'The court will try.'"

The defendant cites again the cases of Garretson v. Clark, 111 U. S. 120, 4 Sup. Ct. 291, 28 L. Ed. 371, Seymour v. McCormick, 57 U. S. 480, 14 L. Ed. 1024, and Keystone Mfg. Co. v. Adams, 151 U. S. 139, 14 Sup. Ct. 295, 38 L. Ed. 103, in defense of its course; but they are inapplicable, because in such cases of slight improvements on operative machines it is often impossible for the infringer to know the portion of the profit attributable to the improvement, and hence its duty to keep that part separate is not so imperative. But where, as in the case in hand, the complainant is entitled to the entire profits from the infringing devices of the defendant, the duty is imperative, and the failure to discharge it, or the failure to distinguish subsequently such profits from its own, subjects, and ought to subject, the infringer, and not its victim, to any unavoidable loss that results from the inaccuracy either of the defendant's disclosure of its profits or of the complainant's proof, when there is any substantial evidence upon which to base an estimate of the profits derived from the infringing devices.

In like cases, upon evidence similar, but far less accurate and convincing than that in this record, infringers have been refused permission to take advantage of their own wrong, and have been required to pay the estimated profits they derived from the infringing devices by the Circuit Court of Appeals of the Sixth Circuit in Brennan & Company v. Dowagiac Mfg. Company, 89 C. C. A. 392, 396, 162 Fed.

472, 476, Dowagiac Mfg. Company v. Superior Drill Company, 89 C. C. A. 399, 400, 162 Fed. 479, 480, and P. P. Mast & Company v. Superior Drill Company, 154 Fed. 45, 57, 83 C. C. A. 157, and by the Circuit Court of Appeals in the Second Circuit in Wales v. Waterbury Mfg. Co., 101 Fed. 126, 130, 41 C. C. A. 250, 253, 254, and I am of the opinion that this court ought to pursue the same course in the case before us.

For the reasons which have been stated, I am unable to concur in the view of the majority that the decree of the court below should be affirmed; and I think it should be reversed, and a decree should be rendered for the complainant.

(173 Fed. 436.)

THE EDDA.

(Circuit Court of Appeals, First Circuit. October 21, 1909.)

No. 806.

1. COLLISION (§ 49*) — STEAM AND SAILING VESSELS — SUITS FOR DAMAGES — RULES OF EVIDENCE.

   The rule of evidence applied, in cases of collision between sailing vessels, where the evidence is conflicting, that it is more probable that one vessel fell off from her course than that the other changed her course many points, applies with less force to a collision between a sailing vessel and a steamer.

   [Ed. Note.—For other cases, see Collision, Cent. Dig. § 55; Dec. Dig. § 49.*]

2. COLLISION (§ 49*)—STEAMER AND SAILING VESSEL MEETING—EVIDENCE CONSIDERED.

   A decree of the trial court affirmed which found that a collision in Vineyard Sound, on a clear evening, between a schooner and a steamer meeting, was due solely to the fault of the schooner in deviating from her course to one across that of the steamer.

   [Ed. Note.—For other cases, see Collision, Cent. Dig. § 55; Dec. Dig. § 49.*]

Appeal from the District Court of the United States for the District of Massachusetts.

Suit by the Coastwise Transportation Company, as owner of a schooner, against the steamship Edda, Christopher P. Meidell, claimant, for collision. Decree for respondent, and libelant appeals. Affirmed.

Edward F. Blodgett (Blodgett, Jones & Burnham, on the brief), for appellant.

Edward S. Dodge and Benjamin Thompson, for appellee.

Before COLT, PUTNAM, and LOWELL, Circuit Judges.

PUTNAM, Circuit Judge. This is a question of collision in Vineyard Sound between a steamer and a sailing vessel, in the evening, clear, but yet, of course, such as to compel each vessel to rely on the lights within range. The testimony from each is directly contradictory,

both as to the courses and the lights, without any clear proof from either where the collision occurred. The only two established propositions are that the steamer was running in a westerly direction, leaving the gas buoy near the eastern end of Hedge Fence on her port, and that the sailing vessel changed her course at Nobska Light, and from there steered in an easterly direction. With reference to everything else, any determination of the courses pro or con would not assist the determination of the bearings of the lights of the two colliding vessels. Neither would a determination of the latter assist a determination of the former. In other words, the proofs from each vessel involve inevitably questions of both courses and lights. The determination, with any accuracy, of the place of collision, might enable us to work back to the determination of the other issues; but the place of collision we cannot fix with any certainty.

The ultimate question is whether the sailing vessel held her course or swung around some five to six points, bringing her into collision with the steamer at almost right angles, or whether the change of course was on the part of the steamer. It would clearly have been on the part of the steamer, if she had voluntarily headed towards Squash Meadow, where she finally sunk; but her testimony is that she was brought up on Squash Meadow some time after the collision by the action of the wind and the currents. The parties have not solved the case, but have simply arrayed witnesses against each other. We find some circumstances which discredit the case of the steamer, and we find other circumstances, to some of which we will refer, which strengthen it, and the conclusion in her favor reached by the District Court.

The schooner urges anew on us, with persistency, the proposition that it is exceedingly improbable that she should have swung off from her course so many points as are involved in the claim that she was in fault. She calls our attention to the fact that we have several times observed on this, especially in The Metamora, 144 Fed. 936, 940, 75 C. C. A. 576, decided February 21, 1906. It is true we agree that, as between two sailing vessels, it is much more probable that one of them will fall off from her course than that the other will swing many points therefrom. Nevertheless, this is only one element, and it applies with less force to a collision between a steamer and a sailing vessel. In the case of a steamer there is no question of falling off; and the inherent improbability to be applied to the present case is quite as great with the one as with the other. We see nothing of this character sufficient to guide us safely between the parties here.

It is also claimed by the schooner that she was sailing with her booms well off on the starboard side, and that, if she had changed her course to starboard, as claimed by the steamer, her sails would have been taken aback and jibed over. They did jibe over, but whether before or after the collision cannot be ascertained from this record with any degree of certainty.

The counsel for the schooner also comment on the lack of qualification and the youth of the steamer's lookout, and call attention to the fact that he admits that he did not know the points of the compass.

The opposing counsel, as well as the learned judge of the District Court, commented on, and criticised as effectively, the schooner's lookout; and the criticism made of the latter might have been even more vigorous than it was. This lookout says that, when the steamer "made a dash across," he saw the red light, but that he did not see it until then. Yet the theory of the schooner was red to red all the time until the steamer made her alleged change of course. Probably, if the case of either vessel depended on the qualifications of the lookout, one would neutralize the other.

The schooner relies especially on a drawing made on a United States chart of the locality in question, from which she maintains that the courses claimed by the steamer were impossible. If these had been laid down by an expert, they might have given us some light; but a rule of thumb drawing like this is of no value in a case where a dispute about courses involves margins so narrow as those here.

Her counsel also comment on the proposition that the steamer was not navigating on the starboard side of the channel. Neither what is the channel, nor the relations thereto of either vessel, is sufficiently established to enable us to apply this proposition with any satisfaction.

Also, as to a claim that the steamer was at fault for attempting to cross the bow of the schooner, this is merely begging the whole case. If, on the other hand, the claim had been made in a suitable manner in the District Court that under the twenty-third article, or under the twenty-ninth article, the steamer, when, as she says, she saw the schooner swinging, should have slackened her speed, or stopped, or reversed, it may be that we would have held that the collision could thus have been avoided. We might, therefore, have held that there was mutual fault. But no such proposition is before us, or can arise on the record as made in the Circuit Court, or under the assignment of errors filed in connection with taking this appeal.

On the other hand, we think that the testimony of Capt. Cooper referred to by the District Court essentially determines the case in favor of the steamer. He was a skilled mariner, and on the night of the collision was second officer of the towboat Carlisle. The position of the Carlisle requires some explanation. A tow of three barges was heading easterly on the southerly side of the channel. The schooner was sailing easterly on a course parallel, or approximately so, to that of this tow. The Edda was, as she claims, heading westerly on a course which took her between the tow on the south and the schooner on the north. The Carlisle was heading easterly through the lane between the tow of three barges on her starboard and the steamer on her port. Cooper was on the watch at the window of her pilot house using his glasses. He was the only witness who had a correct perspective. In other words, he was like one who, at one end of a piece of highway, looks down through the center of the highway, and can thus arrange the order of what is approaching thereon. His testimony is clear and unshaken upon two points, either of which is important, and one of which is quite determinative. He saw the Edda coming down, contrary to the theory of the schooner, between the schooner on her starboard and the tow on her port, and he saw the

schooner swing on her course, with the collision immediately following. In view of what we have stated, aside from the testimony of Cooper, it would be impossible for us to satisfy ourselves that we could reach a conclusion which would approve itself to us better than that of the learned District Judge; and, with the testimony of Cooper, we feel that the burden preponderates in favor of the steamer.

The schooner appealed against a determination of a question of costs which was in accordance with our decision in The City of Augusta, 80 Fed. 297, 303, 304, 25 C. C. A. 430, an opinion passed down in 1897.

The decree of the District Court is affirmed, with interest and costs in both courts.

NOTE.—The following is the opinion of Dodge, District Judge, in the court below:

DODGE, District Judge. The libelant is owner of the four-masted schooner Sagamore, of Boston. It claims compensation for damage to her in a collision with the Norwegian steamship Edda, at about 8 o'clock in the evening of May 11, 1907, off East Chop, in Vineyard Sound. The schooner, loaded with coal, was bound eastward, for Boston. The steamer was bound westward, for Newark, N. J., with a cargo of plaster rock.

The Edda has, of course, the burden of showing why she did not keep clear of the schooner. She undertakes to show that she was prevented from doing so by failure on the schooner's part to hold her course.

The Sagamore was the larger vessel of the two. Her length over all was 225 to 230 feet, her breadth of beam 44 feet, her draft over 20 feet, and she was of 1,280 tons burden. The Edda's dimensions were 241 feet length, 34 feet beam, she was drawing not over 16 feet, and her tonnage was 1,138 gross, 699 net. The Sagamore carried 10 men all told; the Edda, 14.

Notwithstanding that the Edda was a steam vessel, the Sagamore was moving at the greater speed. With nearly all sail set, she was heading, after passing Nobska, on her own evidence, southeast by east, having the wind on her port quarter, and her booms on her starboard side held off by boom tackles. The tide was running to the southward and eastward, and with her rather than against her. On her own evidence, the allegation of her libel that her speed was nine knots understates rather than overstates it. Most of her witnesses put it at between nine and ten knots. According to the Edda's evidence her speed was from seven to eight knots, and in this particular there seems no attempt to controvert her evidence.

Both parties have regarded the place of collision as in a "narrow channel," and the Edda was required by article 25 of the sailing rules (U. S. Comp. St. 1901, p. 2891), to keep to the northern side of mid-channel, that being the side which lay on her starboard side in passing through. One charge of fault made against the Edda in the libel is that she was "not navigating on the starboard side of the channel" (article 3). According to the libel, the Sagamore's course through the channel was southeast by east, and was "a little on the starboard side of the center of the channel"; the Edda, when first seen, and up to a time "when the vessels approached close to each other," was at all times on the schooner's port bow, showing the schooner her red light only; her green light was shown to the schooner for the first time when the vessels were close to each other; and she then ran directly across the schooner's bow. It is further alleged in the libel that by the collision which followed the schooner was thrown around toward the southern side of the channel, immediately anchored to avoid collision with a barge, and sank, while so at anchor, "nearly in mid-channel." There is no distinct allegation that the Edda was violating article 25 before she showed the schooner her green light, and the allegations referred to render it so difficult to suppose that she could have been much to the southward of mid-channel previous to that time that the charge of violating article 25 might be taken as referring only to her navigation afterward.

If the schooner's course was only a little to the southward of mid-channel, the Edda's original course must have been less so. If the schooner sank nearly in mid-channel, the place of collision could not have been further south than where she sank, and the Edda must have been further north than the place of collision before she showed the schooner her green light.

The channel referred to lies between Hedge Fence Shoal on the north and East Chop and Squash Meadow Shoal on the south. What should be regarded as its northern and southern limits, respectively, for the purposes of this case, is in dispute. There can be no dispute about the position in it of the schooner after she sank. It is fixed by a buoy afterward placed near the wreck and marked on the Coast Survey chart. It is somewhat to the southward of mid-channel, if the channel be regarded as including the whole distance between the buoy off East Chop and the nearest point of Hedge Fence Shoal as shown on the chart. It is, however, not further to the southward of mid-channel than I think the schooner must have gone in that direction after the collision, on the evidence relating to that question. The testimony from the Edda is that she entered the channel by passing to the northward of the gas buoy off the eastern end of Hedge Fence Shoal, and that she did so does not appear to be seriously questioned. If so, and if the place of collision was not south of mid-channel, as I think it could not have been, my conclusion must be that the Edda's course before the collision did not violate article 25, whatever be taken as the boundaries of the channel. As will appear, she admits having starboarded her helm to avoid the schooner. Whether she ought to have ported it instead, in view of article 25, or for any reason, is a different question.

The conflict upon which the case really turns is that which exists between the differing accounts of the approach of the two vessels given in the libel and in the answer. The libel, as has been stated, puts the Edda on the schooner's port bow, showing the red only of her two sidelights, until the vessels are at close quarters, and charges her with then bringing about collision by a sudden change of course to port under a starboard helm, such as to run her across the schooner's bow. According to the answer, the Edda had the schooner during this time on her starboard bow, and except for a short period after she was first sighted during which both her lights were visible, showing the green light only, and the vessels would have passed each other starboard to starboard, had not the schooner prevented it by swinging to starboard directly toward the Edda under a port helm, showing both lights, until she struck the Edda's starboard side somewhat aft of amidships. Both parties agree that the Edda's starboard side was struck by the schooner about amidships.

The conflict between these two accounts is irreconcilable. If the Edda bore over the Sagamore's port bow, and her red light only was there visible, she could not possibly have had the Sagamore over her own starboard bow showing a green light only. The acceptance of either account as true involves the conclusion that the witnesses who support the other are either falsifying or mistaken. According to the witnesses from the Edda, the vessels would have passed each other starboard to starboard, had not the schooner made her change of course to starboard, and according to the schooner's witnesses the vessels would have passed each other port to port without collision, but for the change of course to port by the Edda. A conflict of testimony of this type is not uncommon in collision cases, when the vessels have approached each other on nearly opposite parallel courses. In such cases the witnesses from each vessel are not infrequently found to locate the other over the bow of their own vessel opposite to that over which she must, in fact, have borne if the witnesses from on board the other are to be believed. It would seem that mistake in determining the true bearing of another vessel so approaching is easily possible without attentive care in observation.

The witnesses from the Sagamore include the entire watch on deck at the time; also the mate, who, though not on duty, says that he came on deck before the collision. The captain, whose watch it was from 6 to 8 o'clock, was on the quarter-deck, near the wheel. In his watch were the second mate, who was engaged in clewing down the mizzen topsail, and two colored seamen; one of them steering, the other on lookout forward. The man on lookout had partly lost the sight of one eye. The captain and both mates testified in per-

son at the trial. The lookout and man at the wheel gave their depositions out of court.

The man on lookout testified that he saw first the masthead light of the Edda, and next her red light, both bearing over the schooner's port bow. Some time after reporting the steamer's red light, he "saw her cut across our bow, we struck her, and as we were striking I lit off the forecastle head." The shock of collision knocked him down near the mainmast, on his way aft. The steamer's green light he never saw at all.

Evidently the green light must have been at some time shown, if the steamer "cut across the schooner's bow from a position in which her red light was the only side light visible, and on the schooner's port bow." There must, of necessity, have been a time when both side lights were visible on the schooner, and a further time during which the green light only was visible. But the lookout is not the only one of the schooner's witnesses who failed entirely to see these changes. No one on the schooner saw the green light at all until after the collision. The man at the wheel says he never saw any of the steamer's lights, except her masthead light. The captain, though he got up on the poop deck forward of the wheel to observe the steamer through his glasses, says he saw her masthead and red light a point and a half on the schooner's port bow, and felt sure she was going to pass clear of the schooner to windward until she had got close to the schooner, when he saw her keep right off toward the southern side of the channel, and in a few seconds—"just like a flash"—the vessels were together; but he never saw her green light at all until after the collision. The statements of the only other man in the watch, the second mate, are that he went forward after the steamer was first reported, saw her masthead and red light two points at most on the port bow, went aft again, and set to work clewing down the topsails, until the captain exclaimed, "She is crossing our bow." Dropping the clew line, he then ran forward to the forecastle head, and found the steamer right across the schooners' bow, not 25 feet from the jib boom. It was then that he saw the green light for the first time on the schooner's starboard bow. As to the first mate, he testifies to having seen the steamer's masthead light a point at most on the port bow, 20 minutes before the collision, after which he went below and stayed there until he heard the captain cautioning the man at the wheel: "Look out for your steering. There is a steamer that is acting queer." Jumping on deck, he saw the steamer's hull and masts nearly ahead, and saw her masthead light, but noticed no other light on her until after the collision.

There were other vessels in the vicinity at the time which may well be supposed to have been occupying some of the attention of those in charge of both the colliding vessels. The tug Paoli, towing four barges, was passing through the same channel, in the same direction with the schooner, and, like her, meeting the Edda, though her course and that of the barges was considerably nearer to the East Chop side of the channel than the course of either colliding vessel. Between each two vessels of this fleet there was at least 175 fathoms of hawser. The first barge after the tug was the Wayne, the Radnor came second, the Haverford third, and the Devon fourth and last. All these vessels had passed West Chop ahead of the schooner; but the wind had enabled her to gain upon them between there and East Chop, and at the time of the collision she had passed the Devon and reached a position opposite a point about half way between the Devon and the Haverford, next in line ahead. The master of the schooner admitted that he was watching the barges more closely than the steamer.

Failure on the part of the persons in charge of the schooner's navigation to observe the approaching steamer with proper care is therefore manifest upon their own evidence. It is, of course, true that, if the schooner held her course without change, the fact that she was not keeping a proper lookout does not constitute contributory fault on her part as against a steamer; but in determining which of the two conflicting accounts above referred to is the true one, or which of the two sets of witnesses is most likely to have mistaken the true bearing of the other in a case like this, the fact that the schooner's witnesses paid so little attention to the exact manner of the steamer's approach is a fact which must weigh strongly against her.

I do not think it can be said that the like want of care in observation of the

schooner appears from the evidence of the persons in charge of the steamer's navigation. Her watch on deck consisted of the chief officer and man at the wheel, both on the bridge, and of the man on lookout, on the forecastle head, about 120 feet forward of the bridge. They had been on duty since half past 7 by their time. When they came on duty, the Edda had passed Cross Rip, but had not yet reached the gas buoy. The captain was also on the bridge during the same period. The captain, chief officer, and lookout, all Norwegian, testified at the trial in English, which they spoke fairly well. Captain and first officer had been long enough engaged in making similar voyages to be familiar with navigation through this channel. The man at the wheel, also Norwegian, testified at the trial through an interpreter. He was only 17 years old, and only 5 feet 3 inches in height. Comment was made in argument upon his youth and presumed inexperience. It appeared that he had been 4 months on a school ship, 2½ years at sea, and was shipped as an ordinary seaman, at $16 per month. His management of the helm at the time of the collision was under the immediate charge, and with the assistance, of the chief officer. It cannot be said that the wheel was obviously in incompetent hands.

The man at the wheel saw none of the lights on the approaching vessels. If the lookout and the two officers on the bridge are to be believed, the Paoli's towing lights were the first vessel's lights seen after the Edda passed the gas buoy. The tug was reported on the port bow, her lights and those of the barges were observed from the bridge, and it was recognized that a tug and barges were to be passed in the channel, port side to port side. The schooner was next reported on the Edda's opposite or starboard bow. Both her lights were visible. The captain and chief officer on the bridge made them about half a point on their starboard bow. The sails of the schooner, as well as her lights, were seen, according to the evidence; and, if the night was clear, it would seem that this may well have been the case. Sunset on May 11th was at 6:53 p. m., by the almanac, and the steamer was headed toward the western sky. From what was seen of the vessel or her lights, she was judged to bear on the starboard bow, and to be headed to pass to the northward of the Edda. The schooner's red light next disappeared, the green light alone remained visible on the Edda's starboard bow, and the vessels continued to approach in this manner for some minutes; the green light broadening on the Edda's starboard and no danger of collision with her appearing. The Edda, if these were the facts, was necessarily steering so as to pass between the tug and barges and the schooner. When the Edda had passed the Paoli, and was nearly opposite the first of the barges which were following her, the red light of the schooner began to appear again with the green. She was seen to be falling off toward the Edda, and at this the Edda's wheel was starboarded, so that she was kept off to port and headed for the last of the barges passing on her port hand. Notwithstanding alarm blasts twice given on the Edda's whistle, the schooner continued to swing toward her until she struck her starboard side, as has been described, at a considerable angle across the Edda's course, which had then been changed not more than two points from that which she had been steering while the green light had been the only one seen. When the schooner was seen to be keeping off, the signal for full speed astern had been rung to the engine room, but instantly countermanded before being acted on, so that the Edda was under full speed ahead at the collision. To have reversed the engine would have thrown the Edda's bow to starboard or toward the schooner. At no time was any sudden change of course made, placing the Edda directly across the schooner's course, as claimed by the witnesses from the schooner. Such, in substance, is the account of the collision given by the two officers and lookout of the Edda, the three witnesses from on board her who claim to have been observing it.

Careful consideration of their testimony reveals some discrepancies in it, the most important of which seems to me to be that, according to the captain, the Edda's wheel was first starboarded while both the schooner's lights were visible, before she shut out her red light, in order to give her abundant room. According to him there was a slight gradual change of the Edda's course toward the tug and barges as she got down into the schooner's vicinity, before the schooner was seen to be swinging off, not amounting to more than half a point, followed by a further change in the same direction when the first indi-

cations of the schooner's change were noticed. The chief officer mentions no starboarding until after it was noticed that the schooner was beginning to swing. Both agree, however, that the steamer was never headed further to port than to be pointing for the last barge in the tow, and, if so, the entire change of course by the Edda must at most have been comparatively small. It appeared that after the collision the captain had been the only man from the steamer to get aboard the schooner, where he declared that his vessel was sinking (as she in fact was), and attempted to lower one of the schooner's boats. It was argued from this fact, and from the facts that alarm blasts were twice sounded on the steamer's whistle, and the signal to the engine room instantly countermanded, that the captain must have been in a state of confusion or alarm sufficient to disturb his judgment, and some indications of nervous agitation given by him while on the stand were commented on. But, after giving to all such considerations the weight to which in view of all the circumstances they seem entitled, I am still of the opinion that on the whole the account given by the witnesses from the Edda is the one most likely to be reliable.

It is certainly the one which involves less improbability than the other. The schooner's account requires a very considerable change of course on the Edda's part, and requires it to be made so rapidly that the attention of no one on the schooner was attracted until it was made. The Edda's account requires a much less change of course on the schooner's part, and one occupying time enough to permit its beginning and progress to be observed on board the Edda, and alarm blasts to be twice sounded on her whistle in warning against it, before it was completed. The difficulty of understanding why the schooner should change her course, and change it toward the barges, over whichever bow she had the Edda, cannot be denied; but there is at least equal difficulty in understanding why the Edda should change her course in that direction in the manner claimed by the schooner, and the difficulty is particularly great if it be supposed that she was on the schooner's port bow at the time she made it. To convict her of crossing the schooner's bow, and placing herself directly across the channel course, toward the barges, sounding alarm blasts meanwhile, stronger evidence is needed, as it seems to me, than is furnished by the witnesses from the schooner, notwithstanding the presumption in that vessel's favor.

No direct reference has yet been made to a part of the evidence which consists of testimony from on board some of the barges in the Paoli's tow, and the Carlisle, a tug which was following the Paoli and her barges, and was not far astern of the barge Devon when the collision happened. The libelant called as witnesses the master of the barge Haverford, the master of the barge Devon, and his wife. The respondent called the master of the barge Radnor, the engineer of the barge Devon, and the master of the tug Carlisle. The case is one of the kind in which the court may well resort to and depend largely upon the testimony of witnesses not identified with either vessel, as in The Annie J. Pardee (D. C.) 25 Fed. 155, and The Charles H. Trickey, 66 Fed. 1020, 14 C. C. A. 225, for the purpose of determining which of sharply conflicting accounts given by the crews of the two vessels has the best claim to belief.

Taking the statements of these witnesses as given at the trial, and without regard to the question whether different statements had at any time been made by any of them, I am of opinion that the weight of their evidence decidedly tends to confirm the account of the collision given by the Edda's officers and lookout. Capt. McMahon of the Devon was below before and at the time of the collision, and his testimony relates to the position of the two vessels while they were together. His wife and the engineer were together in the Devon's pilot house. According to the engineer's testimony, which I must upon questions of this kind prefer to that of Mrs. McMahon tending to contradict it, the Edda, when abreast of the Paoli, was showing her green light to the schooner, or possibly both her lights. She was heading so as to pass about half way between the schooner and the barges, and there was plenty of room for her to pass between them. Hearing the alarm blasts from the Edda, he noticed that the schooner had changed her course and was heading for the tow. At the collision she had changed it apparently under a port

helm so far as to be heading "right south." He could see her hull "broadside to us." The steamer had deflected only a little from the course on which she appeared to be before the alarm whistles were sounded. The Devon was the nearest vessel to the collision. Capt. Nolan, of the Haverford, ahead of the Devon, says only that he did not see the schooner make any change of course. But neither did he see any change on the part of the Edda. Capt. Martinolich, of the Radnor, ahead of the Haverford, and Capt. Cooper, of the Carlisle, astern of the Devon, looking on from their different points of view, agree that the Edda before she whistled could safely have passed between the schooner and the tow if the schooner had held her course, that the schooner afterward swung rapidly toward the tow under a port helm, and that until she did this her course was to windward, or to northward of the course of the Edda. These are the important features of the testimony, and none of the criticism upon details of the evidence coming from the respective witnesses has seemed to me sufficient to qualify the general effect.

My conclusion must be that the schooner did change her course to starboard and thereby bring about the collision, notwithstanding the testimony of the man at her wheel that after the course southeast by east was given him it was never changed at all, that the schooner never varied from it more than one quarter of a point, that he did not leave the wheel until after the collision, and that at the collision southeast by east by the compass was the course he was on. This testimony and that of her first mate, that after he came on deck, and while the vessels were on the point of coming together, he stood by the wheel until the schooner's jib boom was right over the Edda and the vessels were within 30 or 40 feet of each other, that he then looked at her compass before running forward, and saw that the schooner's course was southeast by east, I should be obliged to regard with some suspicion, in any event, in view of all the circumstances which appear. It is outweighed, in my judgment, by the evidence tending to contradict it, upon which I have relied.

It is to be observed that, of the independent witnesses who have testified, Capt. Nolan, called by the libelant, agrees with Capts. Martinolich and Cooper called by the respondent, that the barges and the Carlisle were about in mid-channel. This tends strongly to support the conclusion already stated that the Edda's course was to the north of mid-channel and the further conclusion that the Sagamore's was still further to the northward.

The rule requiring a steamer to keep clear of a sailing vessel by a safe margin of safety cannot, of course, be applied to its full extent in a case like this, where so many vessels are obliged to pass each other at once, and all within narrow limits. If, as I think the conclusion must be, on the evidence, there was room enough for the Edda to pass between the schooner and the towing fleet in safety, had the schooner held her course, she cannot be condemned merely for making the attempt. She had the right, in attempting to keep clear of the schooner, to go on either side of her, unless some special danger forbade. To attempt to pass the schooner on the other side involved, on the facts as I find them, crossing ahead of the schooner at some distance, whether greater or less. The master of the Edda gave also as his reason for not doing so his desire to keep outside the sector within which Nobska Light shows red. The location of this sector was obviously for the purpose of warning vessels within it of their proximity to Hedge Fence Shoal. Without deciding that this sector forms the northern limit of the channel, or that a rule of navigation could be safely violated for the mere purpose of keeping outside it, I do not think the Edda's captain can be said, on the evidence, to have overestimated the danger of getting within it, or to have done anything for which he ought to be held in fault through fear of that danger.

If I am right in concluding that the account of the collision testified to by the Edda's witness is the true one, the evidence affords no ground for holding the Edda in fault. The libel against her must therefore be dismissed, with costs.

(173 Fed. 445.)

CATE et al. v. CONNELL et al.

(Circuit Court of Appeals, First Circuit. October 29, 1909.)

No. 833.

1. BANKRUPTCY (§ 72*)—CORPORATIONS SUBJECT TO ACT—NATURE OF CORPORATE BUSINESS.

Where the business of a corporation, as stated in its charter, included some pursuits which are within and others which are without the operation of the bankruptcy law, whether or not it is subject to the act depends on the principal business in which it was actually engaged at or about the time the petition was filed.

[Ed. Note.—For other cases, see Bankruptcy, Cent. Dig. § 17; Dec. Dig. § 72.*

What persons are subject to bankruptcy law, see note to Mattoon Nat. Bank v. First Nat. Bank, 42 C. C. A. 4.]

2. BANKRUPTCY (§ 72*)—CORPORATIONS SUBJECT TO ACT—NATURE OF CORPORATE BUSINESS—"MANUFACTURING PURSUIT."

The conducting by a corporation of a shop for the repairing of automobiles, which repairing consisted chiefly in the adjusting of parts purchased from other persons, was not a manufacturing pursuit, within the meaning of Bankr. Act 1898, c. 541, § 4b, 30 Stat. 547 (U. S. Comp. St. 1901, p. 3423), which subjected the corporation to proceedings in bankruptcy.

[Ed. Note.—For other cases, see Bankruptcy, Cent. Dig. § 17; Dec. Dig. § 72.*]

Appeal from the District Court of the United States for the District of Massachusetts.

In the matter of the Concord Motor Car Company, bankrupt. From an order of adjudication, Martin L. Cate and others, creditors, appeal. Reversed.

Robert E. Goodwin (Carver, Wardner & Goodwin, on the brief), for appellants.

Robert A. Jordan, for appellees.

Before COLT, PUTNAM, and LOWELL, Circuit Judges.

LOWELL, Circuit Judge. On April 9, 1909, Connell and others filed a petition in involuntary bankruptcy against the Concord Motor Car Company, a corporation established under the laws of Massachusetts, "to manufacture, purchase, sell, hire, lease, and operate automobiles, motor boats, and motor engines, and, further, to act as general or special agent of any individual, company, or corporation now or hereafter engaged in the manufacture and sale of automobiles, motor boats, and motor engines." Cate and others, being creditors of the respondent, duly intervened to resist the petition, and among other defenses set up that the respondent was not at the time of filing the petition engaged principally in manufacturing, trading, printing, publishing, or mercantile pursuits, within the meaning of the bankruptcy act (Act July 1, 1898, c. 541, 30 Stat. 544 [U. S. Comp. St. 1901, p. 3418]). The case was referred to the referee, under rule 12 of the General Orders in Bankruptcy (32 C. C. A. xvi, 89 Fed. vii), to ascertain the facts and report on the question of adjudication.

The referee found that the respondent corporation was organized in June, 1906, and from that time until January, 1908, was engaged in the business of buying and selling automobiles; that at about the last-mentioned date it added to its business a garage and a machine shop. Savell, the respondent's president and treasurer, testified that thereafter the respondent ceased the purchase and sale of automobiles, and this is implied in the referee's report, though not expressly stated. Savell also testified that from January 1, 1908, it carried on the business of a garage, and at the same time repaired automobiles and furnished them with supplies. These repairs and supplies were not confined to the automobiles regularly kept in the garage. The referee further found that at least 75 per cent. of the respondent's business was that of repairing and furnishing supplies. He was of the opinion that the respondent "was engaged, not only in manufacturing, but also as a trader and in a mercantile pursuit," and he recommended an adjudication of bankruptcy. The learned judge of the District Court agreed with the finding of the referee, and especially:

"That at least 75 per cent. of its [the respondent's] business consisted in repairing automobiles and furnishing supplies of all sorts for them, and that making such repairs and furnishing such supplies were its principal and foremost business."

He therefore decreed an adjudication.

The respondent's business, as stated in its charter, included some pursuits which are within and others which are without the operation of the bankruptcy act. We are here concerned, not with the broad limits of the respondent's charter, but with the nature of its business actually transacted at or about the time the petition in bankruptcy was filed. In re Kingston Realty Co., 160 Fed. 445, 87 C. C. A. 406; In re Quimby Co. (D. C.) 121 Fed. 139, s. c. on appeal 126 Fed. 167, 61 C. C. A. 111. The petitioners do not contend that the operation of the garage, pure and simple, is a pursuit within the purview of section 4 of the bankruptcy act. The referee and the learned judge of the District Court have agreed in finding that repairs and supplies constituted at least 75 per cent. of the respondent's business. Neither of them discriminates by any finding concerning the respective proportions of these two kinds of business, and we find no evidence in the record which enables us to separate the two. The objecting creditors do not deny that the furnishing of supplies is a trading pursuit, and so within the purview of section 4; but, inasmuch as there is no evidence that the furnishing of supplies alone constituted the principal part of the defendant's business, the petitioners, in order to maintain their case, must show that the repairing, as well as the supplying of automobiles, as carried on by the respondent, is within the purview of the bankruptcy act. To support their contention the petitioners do not rely upon any word in section 4 except "manufacturing," and so the decision of the case is made to turn upon the answer to this question: Was the repairing of automobiles, as performed by the respondent, a manufacturing pursuit?

The words descriptive of the various pursuits which bring a corporation within the scope of the bankruptcy act are words in common use,

and are to be given their everyday meaning. White Mountain Paper Co. v. Morse & Co., 127 Fed. 643, 62 C. C. A. 369. We do not think that the repairing of automobiles, as set out in the finding of the court below and in the evidence contained in the record, can fairly be described as a manufacturing pursuit. It seems to have been chiefly, if not altogether, the adjustment of automobile parts, bought from other persons, to existing automobiles. While no decided case is exactly in point, both the definitions of manufacture given by courts of authority and the decisions which those courts have rendered on particular facts are here persuasive against the petitioners. Hall & Kaul Co. v. Friday, 158 Fed. 593, 87 C. C. A. 23; In re T. E. Hill Co., 148 Fed. 832, 78 C. C. A. 522; In re Kingston Realty Co., 160 Fed. 447, 87 C. C. A. 406; In re First Bank of Belle Fourche, 152 Fed. 64, 81 C. C. A. 260. In so far forth, therefore, as the defendant's business was repairing, that business was outside the act. If this be true, there was no proof that the respondent's principal business was within the scope of the act. This conclusion makes unnecessary the consideration of the other questions presented at the argument. The decree of the District Court adjudicating the respondent a bankrupt must therefore be reversed.

The decree of the District Court is reversed, the case is remanded to that court, with instructions to dismiss the petition with costs, and the appellants recover their costs of appeal.

NOTE.—The following is the opinion of Dodge, District Judge, in the court below:

DODGE, District Judge. According to the petition in this case the alleged bankrupt is a corporation "engaged principally in manufacturing and trading automobiles." According to the answer which is filed, not by the alleged bankrupt, but by a firm which claims to be its creditor for insurance premiums, it was not at the filing of the petition a corporation engaged principally either in manufacturing, trading, or mercantile pursuits, and therefore not within section 4 of the bankruptcy act (Act July 1, 1898, c. 541, 30 Stat. 547 [U. S. Comp. St. 1901, p. 3423]).

The evidence is that on or about January 1, 1908, the corporation had practically ceased the purchase and sale of automobiles; an agency under which it had previously dealt in them having been wound up. From January 1, 1908, to the filing of the petition on April 9, 1909, it "operated a garage," by which is meant that it stored automobiles, cared for them, and furnished them with gasoline and oil. Had the mere storage and care of automobiles been the principal business carried on during the period referred to, the analogy of the decisions which hold livery and boarding stables not within section 4 would no doubt require me to hold this corporation not subject to adjudication. Re H. J. Quinby Co. (D. C.) 121 Fed. 139; Id., 126 Fed. 167, 61 C. C. A. 111; Gallagher v. De Lancey Co. (D. C.) 158 Fed. 381. But the referee has found, and I see no reason in the evidence for disagreeing with him, that, besides operating a garage, the alleged bankrupt, during the same period, carried on a machine shop at its place of business; that at least 75 per cent. of its business consisted in repairing automobiles and furnishing supplies of all sorts for them; and that making such repairs and furnishing such supplies were its principal and foremost business. This, I think, is sufficient to bring it within section 4b.

The only act of bankruptcy charged is a general assignment. An instrument purporting to be a general assignment such as the petition describes was executed by J. E. Savell, the alleged bankrupt's president and treasurer, in its name, and was acknowledged by him to be its free act and deed. There had been a vote of the directors that this assignment be made, and Savell be authorized to sign the necessary papers as president and treasurer. The re-

spondent creditor objects that the directors' authority was insufficient for the purpose, and that a vote by the stockholders was necessary, so that the act of bankruptcy has not been committed, because the attempted general assignment is void. The general principle is that it lies within the powers of directors, as such, to make a general assignment of a corporation's property for its creditors' benefit. In Re Bates Machine Company (D. C.) 91 Fed. 625, upon which the objecting creditor relies, this is conceded (91 Fed. 628); but the court declined to infer from it that the directors had power, without the stockholders' assent, to admit the corporation's insolvency and its willingness to be adjudged bankrupt on that ground. This is a Massachusetts corporation, organized under St. 1903, p. 418, c. 437, which in section 19 assigns to directors "all of the powers of the corporation, except such as are conferred by law or by the by-laws of the corporation upon the stockholders." No provision of law is referred to which confers the power to make a general assignment upon the stockholders only, and the by-laws of the corporation have not been put in evidence. The vote of the directors and the execution of the assignment in pursuance of it having been shown, it seems to me that the general principle to which I have referred puts the burden upon the respondent creditor to show, by some provision of law or by some by-law of the company, that the directors did not possess the power which they undertook to exercise. There is no proof at present that the directors did not possess it. In the absence of such proof, I do not see how it can be said that the directors' action was wholly and absolutely void. It might have become valid by the ratification or acquiescence of the stockholders, and it appears from the evidence that Mr. Savell, who executed the general assignment, besides being president and treasurer, owned or controlled a majority of the stock. And, although a stockholder or a creditor might have the right to invalidate the assignment, it would not follow that it did not constitute an act of bankruptcy, under section 3 (4) of the bankruptcy act. The language of the act is not to be limited in its operation to assignments which are in all respects valid. Griffin v. Dutton et al., 165 Fed. 626, 91 C. C. A. 614, decided by the Court of Appeals for this Circuit, December 16, 1908. I must also agree with the referee, therefore, in his finding that the act of bankruptcy has been committed.

Adjudication ordered.

(173 Fed. 866.)

UNION DEVELOPMENT & CONSTRUCTION CO., Limited, et al. v. GLOBE ASPHALT CO.

(Circuit Court of Appeals, Fifth Circuit. October 4, 1909.)

No. 1,774.

SALES (§ 77*)—CONTRACT—CONSTRUCTION—COMPENSATION—CONTRACT TO FURNISH ASPHALT REQUIRED BY PAVING CONTRACTS.

By a contract made by an extended correspondence an asphalt company agreed to furnish to a paving company crude asphalt from its mine and liquid flux necessary to make an asphaltic paving cement, sufficient in quantity to complete certain contracts of the paving company with the city of New Orleans, at the price of $37 per ton, with a guaranty that each ton of the cement would lay 90 square yards of pavement specified. The cement was to be made in New Orleans by means of a portable plant furnished by the asphalt company, which was also to furnish a man to have full charge of the making and laying of the same, his salary to be paid by the paving company. *Held* that, construing the contract in the

light of all the correspondence, it required the paving company to pay for the asphalt at the rate of $37 for each 90 square yards of pavement laid, and not for each ton of the crude material shipped.

[Ed. Note.—For other cases, see Sales, Dec. Dig. § 77.*

Contracts for sale of things to be produced or manufactured, see note to Star Brewery Co. v. Horst, 58 C. C. A. 363.]

Appeal from Circuit Court of the United States for the Eastern District of Louisiana.

Suit in equity by the Globe Asphalt Company against the Union Development & Construction Company, Limited, and others. Decree for complainant, and defendants appeal. Reversed in part.

J. D. Rouse, Wm. Grant, Wm. B. Grant, Harry H. Hall, J. Blanc Monroe, Emile Godchaux, Samuel L. Gilmore, and H. G. Dupre, for appellants.

John Clogg, Lamar C. Quintero, and Edgar H. Farrar, for appellee.

Before PARDEE, McCORMICK, and SHELBY, Circuit Judges.

McCORMICK, Circuit Judge. The Union Development & Construction Company, Limited, one of the appellants, which we will call the Union Company, is a corporation engaged in the paving business in the city of New Orleans. The appellee, the Globe Asphalt Company, which we will call the Globe Company, was the lessee, for a long term, of extensive and rich natural deposits of asphalt on Moore's Ranch, Goleta, Cal., the Goleta mines, and refined the product of these mines at a refinery which it installed and operated at a point in California which it called Obispo, and from which it marketed these products throughout the United States under the name of "Obispo asphalt." On November 14, 1901, the appellee granted to the Globe Asphalt & Paving Company, of South Dakota, the exclusive right to use Obispo asphalt in the states of Florida, Louisiana, Mississippi, and Texas. This Paving Company agreed to take certain minimum amounts for each state every year during the life of the contract, which was to run 25 years. Shipments under the contract had to begin in January, 1903, and continue at the rate of 50 tons a month. The failure of the Paving Company to take the minimum amount authorized cancellation. The Paving Company agreed to use no other asphalt, and was to pay $30 per ton of 2,000 pounds, gross weight, f. o. b. cars or boat at Obispo, Cal. On October 20, 1902, this contract, with all rights and benefits thereunder, was transferred to Harold W. Newman, of New Orleans, and on October 27th, of the same year the transfer was duly ratified in writing by the Globe Company, and the price reduced to $25 per ton. Newman subsequently associated himself with other parties, forming the Union Company, which company, with the consent of the appellee, did, on November 29, 1902, take over his contract. This contract expired on June 1, 1903, but was renewed by the Globe Company on June 12, 1903, and its privileges and benefits extended to the Union Company, and to any reorganization thereof or formation of a new company as successor.

In April and May, 1903, the city of New Orleans advertised for bids on several large paving contracts. After correspondence and per-

sonal conferences with the appellee, and obtaining full information from its president and certain satisfactory concessions, the Union Company prepared estimates based on Obispo asphalt to be furnished by the Globe Company, and on June 1, 1903, submitted bids on three pieces of paving on which bids were solicited, namely, on Canal street, on Polymnia street, and on Pelican avenue. There were bids by other parties. The bids of the Union Company were the lowest. To these bids objection was made by a member of the council because of suggestions from certain owners of abutting property on Canal street to the effect that the Globe Company was manufacturing a portion of its asphalt from the residuum of petroleum or other oils, instead of exclusively refining asphalt mined from natural deposits. One of the specifications in the city's proposals for bids was that asphalt shall be mined from some natural deposit; that asphalt manufactured solely from petroleum or other oil residuums, shall not be employed. Ultimate action on the Union Company's bid was postponed, and the city council took steps to have the city chemist, who was then in California, visit the appellee's Goleta mines and its Obispo refinery and make report thereon. The result of this proceeding sufficiently appears from the following extracts from letters of the appellee, addressed to the Union Company from Los Angeles, Cal.; the first bearing date of July 21, 1903, in which it was said:

"For reasons not necessary to be explained here, we were compelled to deny Prof. Metz the privilege of officially visiting the Goleta asphalt mine, and, as that was part of his investigation, he deemed it best to stop all investigations. It is doubtful that, even though he had finished up his work, the report that he would have made, though of the most favorable character, would have relieved us of any suspicion that the material to be furnished your company at a later day would not be all, or in part, asphalt made from crude oil. In order that all suspicion may be eliminated, we hereby propose to furnish your company with all the asphalt you may want for use in street paving in New Orleans, La., direct from the Goleta asphalt mine, and to furnish with each shipment thereof the Goleta wharfmaster's shipping receipt and weight sheets, so there may be no question as to where the asphalt comes from, and this asphalt can then be refined at your New Orleans asphalt paving plant, immediately under the eye of such city official as may be appointed for that purpose. This Goleta asphalt, as it comes from the mine, is much richer in bitumen than the refined Trinidad, and contains no water; hence you can refine and then flux it with the liquid asphalt we would furnish you from our Obispo works, and have exactly the same results and product as we obtain at our works in the shape of our finished refined Obispo asphalt. By handling the matter in this way, the question of crude oil asphalt cannot be used in any manner. * * * As this Goleta asphalt will average 60 per cent. or better of bitumen, as against 95 to 97 per cent. that is contained in our refined Obispo, we will make something like a corresponding difference in price. In other words, we will make the price for the Goleta asphalt at $15 on board steamer at the mine, or $18 per ton f. o. b. cars East San Pedro Harbor. We trust that the proposition will remove all objections to awarding your company the paving contracts, and should suggest that this proposal as to the shipment of your supply of asphalt direct from the Goleta mine, and the refining thereof in New Orleans, be written out and formally presented to the finance committee for their consideration."

And again the next day it wrote:

"If the question of the awarding of the contracts to the Union Development & Construction Company is not dependent upon strictly political grounds, we cannot see how the city authorities can do otherwise than give this company

the work, since we have made a proposition by which the city is sure of their supply of asphalt direct from the mine, and such evidence connected therewith as to make it absolutely sure that their assignments can be traced from the Goleta mine direct to New Orleans. Upon arrival in New Orleans, this asphalt can be refined just as well at the ground, wherever your asphalt plant is located, and a refined product obtained that would be of the same high grade and quality as though it was refined in the modern asphalt refinery of this coast. If this programme is carried out, the writer [the president of the Globe Company] will personally look after the proper appliances that will have to be erected for this refining process."

And on July 27, 1903, its president wired the Union Company:

"We will guarantee cost and freight will not be more than $42 per ton for finished refined asphalt on final and true delivery your works at New Orleans; that is, according to contract, regardless of cost to us. I will pay for refining plant and cost for refining, and will guarantee delivery to you asphalt equal in quality and purity as though refined here."

This proposition was refused by wire. By letter of the same date the Globe Company expressed itself thus:

"It is intended that the refined Obispo asphalt shall be delivered to you at a cost price fixed by the contract existing between the Globe Asphalt Company and the Union Development & Construction Company; the only difference being that the refining will be done in your city, instead of California. The whole object of this plan has been given in a former letter; that is, to eliminate the crude oil asphalt question, and, as the finished material will not cost your company any more per ton than as provided for in the contract between us, we cannot see why you would have any serious objections, and surely the city officials will agree that the refining can be done in your city just as well as though done in California."

Upon receipt of this letter, the Union Company replied by wire:

"Your telegram to hand of July 27th. The proposal is accepted. Erect refinery and refine crude here. Expense to be paid by you. Only on condition that you guarantee price of $25 and freight, $12, total $37, per ton of refined asphalt, in accordance with contract dated Los Angeles, October 27th last, since renewed."

To this the Globe Company replied by telegram, dated Los Angeles, July 28th, "We agree to $37 as per your telegram of to-day," which it confirmed by letter of same date, in which it said:

"Your company is not expected to participate in any expense necessary for refining in New Orleans. We stand ready to supply you with refined Obispo asphalt made from Goleta crude asphalt, either from New Orleans plant or Obispo, at your option, and which will comply with all terms of your contract. This proposition is made to eliminate the crude oil asphalt question."

The next day the Globe Company wrote:

"In answer to your telegram of the 28th we wired you as follows: 'We agree to $37 as per your telegram of to-day'—meaning by this that the price of the refined Obispo asphalt which we expect to refine in New Orleans and will be turned over to your company at the price of $37 per ton for the refined material."

This agreement to refine the asphalt in New Orleans was satisfactory to the city authorities, and on October 1, 1903, the necessary ordinances accepting the bids of the Union Company were passed by the city council. By this time a panic had so far congested the money markets that the Union Company found itself unable to finance the large

paving contracts which it had undertaken. Its duly authorized representatives brought this phase of the situation to the notice of the Globe Company. That company at once displayed active anxiety to get its asphalt introduced into New Orleans, and its president undertook personally to interest Northern capitalists in the matter and have them take over the paving contracts held by the Union Company. He sent the Union Company this dispatch:

"Pittsburg, Pa., Oct. 3, '03.

"Flinn will decide 6th day of October. The prospects are encouraging. If Flinn decides favorably, a special agent will be sent immediately to New Orleans, if the city can extend the time that it is necessary to take so an agent can send copy of report. Have received a telegram announcing Guild quite impossible at present."

And on the same day he wrote the Union Company as follows:

"I submitted the telegram to Booth & Flinn to-day, and, after explaining matters fully, Mr. Geo. Flinn expressed himself in a way that left no doubt that he was deeply interested, and that their firm was at liberty to take over the contracts. He requested that I leave the papers with him to look over, and that I call at his office next Tuesday at 9:30 a. m. Mr. Flinn expressed himself in a very frank manner, stating that he looked upon the matter in a very favorable light; that the only difficulty that might arise would be to arrange for such a large sum of money under the present conditions of the money market. If this firm comes to a favorable conclusion, it will be necessary to at once send a representative to New Orleans to corroborate all that I have said, and at the same time close the deal; but, before sending this agent, assurance of a reasonable time extension must be guaranteed by the New Orleans city officials. You can arrange this time extension business, advise me of the fact, and I can inform B. & F., and no doubt I will go to your city with their agent. The inclosed telegram from Guild & Co. was received late this afternoon: 'We have taken up the matter with T. B. Redmond. Information of any kind will be promptly forwarded as fast as obtained.'"

On October 6, 1903, the Union Company telegraphed Mr. Dubbs:

"We have obtained extension until 19th day of October only on condition that if you guarantee Flinn is serious and will arrive not later than 12th day of October."

To which Dubbs replied:

"Pittsburg, Pa., Oct. 8, '03.

"Your telegram to hand during my absence. Under favorable conditions at present existing, I am satisfied we can accomplish desired result within ten days. We have written full particulars."

On October 8, 1903, the Union Company wrote to Mr. Dubbs:

"Your favor of the 6th inst., confirming your telegram of same date, to hand. We understand that thereby Mr. Flinn intends to leave Pittsburg for this city on Saturday, and if not able to leave on that date he will do so on a later day, provided necessary time is given by the city. As wired you, we are granted time by the city notary to sign up the contracts until October 19th; but, should we be forced to ask for further delay, we must do so through the council, and thereby expose our weakness to the public and injure our credit. It is therefore important that you use every endeavor to get Mr. Flinn on the way by Saturday. This would give him a full week to decide. After he has declared his decision to take hold of these contracts, we can then easily obtain further extension from the council in his behalf without injury to ourselves. * * * Please wire us Saturday as to Mr. Flinn's positive movements, as our friends here want to know that we are serious in our representations to them. We, on our part, will wire you on Saturday morning that the extension granted us still holds good until October 19th."

Mr. A. Ledoux, president of the Union Company, invested with plenary power to represent it with reference to these paving contracts, and Judge John Clegg, a member of its executive committee and acting as such, and in part, also, as its legal adviser, visited Mr. Dubbs at Pittsburg. He (Mr. Dubbs) was president of the Globe Company and invested with plenary power to represent it in all matters touching these contracts. Referring to this visit, Judge Clegg in his testimony says:

"We went from here [New Orleans] to Pittsburg, and Mr. Dubbs thought he had parties there who would take the contract, and, not succeeding there, he joined Mr. Ledoux and myself in the visit to New York, seeking to interest people there. Being well informed of the situation, he went there, and was very much in earnest in seeking to get the Brooklyn people to take it up."

On October 10, 1903, Mr. Dubbs wired the Union Company from Brooklyn, N. Y.:

"I have finally made a deal, and will be in New Orleans Thursday."

On October 12th, he wired from Brooklyn:

"Have made deal with New York parties, and will arrive in New Orleans next Thursday with party. Wire me, care Astor House, if satisfactory."

On October 13th, from Pittsburg, Pa., Mr. Dubbs wrote the Union Company:

"Have just returned from New York City, where I went first to see Mr. Kelly, of the Brooklyn Alcatraz Asphalt Paving Co., who had suggested to Mr. Williams that he would like to take over the New Orleans contracts, but, after going over the matter, decided that it would take more money than he commanded. I then took it up with Mr. Firmen, a contractor of New York, who stated on Sunday positively that he would take over the business, and on Monday we were to draw up a preliminary contract, and then start for your city on Tuesday night. On the strength of this I wired you that I would close the deal. On Monday, when we got together, Mr. Firmen stated that he would be unable to finance the business unless the temporary certificates could be used as collateral in your New Orleans banks; hence my message from New York on this subject, and my telegram of to-day from this city on the same question. If your answer is in the affirmative, I am to wire Mr. F., and he will at once start for New Orleans to close up the deal. He expressed himself as only being able to raise $100,000 at the present time, and he would have to depend on the use of the certificates for raising the balance of the money needed to carry out the work. We are awaiting your reply, and, if favorable, you can expect us in your city, not later than Friday morning. H. H. Flinn dropped the matter at the last moment, owing to the fact that he could not leave the city, and would not trust the matter to any one else. Firmen has arranged for two portable asphalt plants, steam rollers, etc., and claims that he can finish up the work in less than six months."

On October 15, 1903, Mr. Dubbs wired the Union Company from Pittsburg, Pa.:

"George Firmen requests us to telegraph you as follows: 'I cannot contract immediately for New Orleans work. Agnew will leave for your place tonight.'"

To which the Union Company replied:

"Your telegram to hand. Under the circumstances, have no occasion for Agnew's coming, unless expenses to be paid by you."

On October 16, 1903, Mr. Dubbs wrote the Union Company from Pittsburg, Pa.:

"As wired you, Mr. Agnew started last night for your city. He will explain more fully as to the tight condition of the money market, and for that reason, more than anything else, it is impossible to handle the New Orleans contracts just at this time. If you can by any means get the city officials to grant you more time, and if the money market should ease up within a reasonable time, there will be no trouble in floating the business on the lines as desired by you. Mr. Agnew will have some suggestions to make which might be of interest to you, and if you should decide to act on any of them you can count on every assistance that this company can give. We will be at all the expense of Agnew's trip, and, should he need any funds before he gets through in your city, kindly advance same, and draw on us at this office, and we will honor same. We trust that something will result from Agnew's visit."

Touching this letter the counsel for the appellee says in his printed brief:

"The Union Company was informed by a letter of date October 16th that all attempts to get somebody to take over these contracts with the city had failed. Thereupon a syndicate was formed, composed of Samuel Hyman, who had been a member of the executive committee of the Union Company, Alfred Hiller, and Charles Godchaux."

Samuel Hyman, above referred to, who was a shareholder in the Union Company and fully conversant with all the correspondence by letter and wire which that company had had with the Globe Company or with its president, Mr. Dubbs, on the subject of Obispo asphalt and the Union Company's contracts with the city of New Orleans, testifies that the Union Company could not go on with these contracts; that he had tried to raise money for them in every shape and form; that Judge Clegg had done so, and Mr. Ledoux, and he thinks that between them they had tried every contractor in the United States, to get them to take over the contracts, but did not succeed.

Alred Hiller, above named, is a brother-in-law of Samuel Hyman, and became much interested in the difficulty in which Hyman was involved with the Union Company, and made diligent inquiry into the condition of its affairs, and took into consideration the proposition which Hyman made to him in regard to forming a syndicate in which he and Hyman and others who might be induced to take part would unite and take over the contracts which the Union Company had obtained from the city. It was expected that F. B. Hull, a stockholder in the Union Company, and Charles Godchaux, and perhaps others, would unite with Hyman and Hiller in forming the syndicate; but Hull concluded to confine his operations entirely to the building department of the Union Company, and Mr. Charles Godchaux alone united with the other two. But, before he consented to come in, he pressed the question upon the others, "How much is that asphalt going to cost?" Being told, he asked, further, "Are you sure of it?" And, being assured, he pressed the further question, "How much will it lay?"

Mr. Hyman, examined as a witness, testifies:

"Then Mr. Dubbs came down, and he and his man, Agnew, and Mr. Ledoux and myself (Hyman) were all up in the Union Development & Construction Company's office one night, and Mr. Dubbs gave us figures on the whole thing, and Mr. Ledoux put them down, and it was understood just as plain as a man

can talk that they figured out how much asphalt it was going to take and the prices."

Mr. Hiller testifies that, when Mr. Hyman requested him to go into the syndicate, he stated the cost of the asphalt from which a large portion of the profit on the work was to come, and requested that Hiller, in order to familiarize himself with the statements, should go over the figures which were in the hands of Mr. Ledoux and could be seen at the office of the Union Company. They (Hyman and Hiller) went to the office of the Union Company, and there met Mr. Ledoux and Mr. Dubbs, and Mr. Ledoux, in the presence of Mr. Dubbs, gave Hiller certain papers (shown witness while he was testifying) which showed the cost of the asphalt, touching which the witness says:

"I went over these papers and calculations with Mr. Dubbs and Mr. Ledoux. These figures are in the handwriting of Mr. Ledoux. They were called out by Mr. Dubbs, and Mr. Ledoux wrote them down. They were being gone over with Mr. Ledoux and Mr. Dubbs when I stepped into the office. They were then already written. Upon the basis of these figures, which practically verified the statements made by Mr. Hyman, I proceeded to form the syndicate."

At the request of Mr. Godchaux that Mr. Dubbs should confirm the price made to the Union Company for asphalt to the syndicate, Mr. Hiller requested Mr. Dubbs to address the parties a letter to that effect, in compliance with which request Mr. Dubbs thereafter handed Mr. Hiller the following typewritten letter (with some carbon copies thereof):

"The Globe Asphalt Company hereby agrees to furnish the Union Development & Construction Company, Limited, and their guarantors, all the Obispo asphalt, in the shape and form of Goleta crude asphalt and refined liquid Obispo flux, both in such proportions as may be necessary to make an acceptable asphaltic cement and in sufficient quantity to complete and finish all of the asphalt paving work that your company now has to do in the city of New Orleans, amounting approximately to 130,000 to 140,000 square yards of asphalt surface street work, the price for same to be $37 per ton of 2,000 pounds gross weight, all f. o. b. cars in New Orleans. This price of $37 per gross ton to be the basic price on our guarantee that each net ton of 2,000 pounds of the refined Goleta and Obispo asphaltic cement will lay an average of 90 square yards of finished asphalt pavement, consisting of a 1-inch binder course and a 1½-inch top or wearing surface; it being understood that in pavements consisting of a 2-inch top coat and 1½-inch binder course the asphalt cement is to lay a proportionate number of square yards of pavement, or 67.5 yards to the net ton of asphaltic cement. The Globe Asphalt Company further agrees to ship forward to New Orleans the asphalt and asphaltic flux as rapidly as the same may be needed for use in the work under consideration. Your company or guarantors to advance and pay all freight and switching charges on same. The Globe Company also hereby agrees to ship upon your order, and same is to arrive in time for use, a complete portable asphalt paving plant and one or two asphalt rollers, for which your company or guarantors is to pay the Globe Asphalt Company for use of same as follows: Five cents per square yard of finished asphalt street surface for the asphalt plant and $5 per working day for each roller. Your company is also to pay the freight charges both coming and going on the asphalt paving plant and on the one or two rollers. The terms of payment and guaranty on said payment to Globe Asphalt Company for all the asphalt furnished and the 5 cents per yard for use of the asphalt plant and the $5 per day each, as rental for the steam roller or rollers, to be as follows: A written guaranty satisfactory to the Globe Asphalt Company is to be given to the Globe Asphalt Company, properly signed by acceptable parties that all money due for said asphalt, asphalt plant, and asphalt roller or rollers shall and will be paid in cash, or equiva-

lent, to the Globe Asphalt Company when the asphalt street work has been finished, the said money to be paid to said Globe Asphalt Company by your company or by the parties signing the guaranty contract referred to, said payment to be paid within 10 days after the said asphalt work is completed and accepted by the city of New Orleans. It is understood that the asphalt furnished by the Globe Asphalt Company and that the asphalt street work done shall be (per se) acceptable and satisfactory to the city of New Orleans. It being understood that all the manipulations of the asphalt, both at the asphalt plant and in laying of same on the street or streets, shall be under the immediate supervision and control of the Globe Asphalt Company, through an agent or representative that said Globe Asphalt Company shall furnish. The salary and expenses of said Globe Asphalt Company agent, manager, or representative shall be at the rate of $2,500 per year, payable by your company as guarantors monthly, and your company to also pay said agent necessary traveling expenses in coming to New Orleans and returning. The asphalt paving plant is to have an engineer accompanying same, and who is to be the responsible agent for the proper care of same; his wages and necessary traveling expenses to be also paid monthly by your company or guarantors. It is further understood and agreed that the Globe Asphalt Company is to attach to each bill of lading on every asphalt shipment a certificate giving the amount of asphalt and the value thereof of such shipment, and said certificate is to be signed by a proper person, acting as agent of the Union Development & Construction Company, Limited, or their guarantors. All asphalt is to be consigned to the Globe Asphalt Company with the B/L properly indorsed for delivery of the asphalt to the Union Development & Construction Company, Limited, or their guarantors, said B/L to be sent through a New Orleans bank and surrendered by said bank upon receiving the signature to the attached certificate above mentioned of the authorized agent of the Union Development & Construction Company, Limited, or their guarantors. This proposition is made with the understanding that all work on the concrete and other parts of the contract will be pushed with all the due diligence necessary to avoid unnecessary delay in the prosecution of the asphalt street work. Acceptance or rejection of this proposition to be made in writing by the Union Development & Construction Company, Limited, and their guarantors within 20 days from date hereof."

The board of directors of the Union Company passed certain resolutions, which were approved at a stockholders' meeting held on November 12, 1903, to the effect that the Union Company transfers, sets over, and assigns, with full substitution, to the syndicate, all of its right, title, interest, claim, and demands, of any nature whatsoever in and to the three paving contracts or bids hereinbefore referred to; the syndicate agreeing to provide all funds for labor, material, superintendence, etc., that may be necessary for the full carrying out of the said contracts, etc. Thereafter the following letters were delivered by the Union Company and its guarantors to the Globe Company:

"Alfred Hiller Company, Limited.

"New Orleans, November 19, 1903.

"Mr. L. A. Dubbs, President Globe Asphalt Company, No. 405 Blakewell Building, Pittsburg, Pa.—Dear Sir: As you have been advised through telegrams from Mr. A. Ledoux, president of the Union Development & Construction Company, Limited, that all matters pertaining to the three contracts with the city of New Orleans which were awarded to the Union Development & Construction Company, Limited, have been arranged, we now beg to advise that your agreement of date October 31, 1903, addressed to the Union Development & Construction Company, Limited, and their guarantors, is accepted, with the exception as follows: It is to be understood that the rental of two rollers is $5 per day for the two, not $5 each. The payment of the crude asphalt and flux is to be made when the work is completed and accepted by the city of New Orleans, and, further, that you are to furnish as-

phalt and flux at the same price for such a quantity as may be necessary during the maintenance feature of the contract. By this is meant what asphalt and flux may be needed to maintain the street for a period of five years. Whilst this last feature may be practically covered by your agreement to the Union Development & Construction Company, Limited, the guarantors or syndicate desire this to be a special understanding with you, your company, as to its supplies for maintenance. We shall advise you in due course concerning the shipments of asphalt, also plant and rollers, and we now beg to inclose to you herewith agreement as was understood would be sent to you.

"Yours truly, [Signed] Union Development & Construction Co., Ltd.,
"A. Ledoux, Pres.
"Alfred Hiller.
"Sam. Hyman.
"Charles Godchaux."

"Alfred Hiller Company, Limited.

"New Orleans, November 19, 1903.

"Mr. J. A. Dubbs, Pres. Globe Asphalt Co., No. 405 Blakewell Building, Pittsburg, Pa.: Referring to your proposal and agreement of date October 31, 1903, we hereby guarantee the payment of all crude asphalt and refined liquid Obispo flux as may be shipped to the Union Development & Construction Company, Limited, for asphalting the following streets in New Orleans, namely: Canal street, from Liberty to Metairie Road; Polymnia, Colliseum to Carondelet; and Pelican avenue, from Bouny street to Elmira street. Also, for rental of asphalt plant and two rollers for said above-described streets. Payments to be made in accordance with terms expressed in said agreement of October 31st, as amended by letter of acceptance of November 19, 1903.

"Union Development & Construction Company, Limited,
"A. Ledoux, Pres.

"Guarantors:
"Sam. Hyman.
"Alfred Hiller.
"Charles Godchaux."

In the resolution of transfer from the Union Company to the syndicate, it was provided that during the operation of the paving contracts with the city this company (the Union Company) shall open and keep a separate set of books, wherein shall be entered exclusively all transactions pertaining to said paving contracts, which books shall be at all times open to the reasonable inspection of the syndicate, the members thereof, or their assigns. It was also provided that in consideration of the Union Company's furnishing, during the operation of the contracts, the use free to the syndicate of its office, office force, office material, officers, and employés, the syndicate shall pay to the company $——— per month, payable monthly, to be continued until said paving contracts have been completed. Books were opened and proper accounts of the proceedings were kept in the office of the Union Company, by or under the direction of Mr. Ledoux, the president of the Union Company, who acted also as the agent or representative of the paving syndicate. Mr. Ledoux died ——— day of ———, 190—. Up to the time of his death he had full control in the office of the operations of the Union Company and of the work of the syndicate, except as to the refining of the asphalt and laying of pavements, which was entirely subject to the direction of Mr. Agnew, who was an employé of the Union Company and its guarantors, and whose salary was paid by them, but who was also agent of the Globe Company especially and completely charged with the refining of the asphalt and the construction

of the pavement so as to make it meet the requirements of the city's contracts. Mr. Dubbs testifies that:

"Mr. Agnew was the general manager of the asphalt department for the guarantors of the Union Development & Construction Company. He was employed on my recommendation. I guaranteed the asphalt would be used in a proper manner, and a pavement laid that would be acceptable to the city; and, so far as the manipulating and handling of the asphalt was concerned, Mr. Agnew was under my instructions. In other words, if I should want to, I could change the form, or I could change the percentage in the pavement. Beyond that, he was not under my control in any way."

The witness Mendlesohn, whose duty it was to follow up the work, write up the books of the syndicate, and add up these books for Mr. Ledoux, testifies that:

"Mr. Agnew had absolute control of the plant. We did not interfere with him. Whatever he did he was responsible for. Mr. Ledoux, the president of the Union Company, was recognized as the head of the whole business. I would not attempt to do anything without consulting with Mr. Ledoux; but there was one party there with whom he (Mr. Ledoux) would not interfere, or to whom he would not give any instructions. That was Mr. Agnew. Mr. Ledoux gave him no instructions as to the refining of the asphalt, or as to laying it, because the Globe Company undertook to furnish asphalt that would make a good pavement, and that it should be properly laid, and that was what Mr. Agnew's business was."

When the shipments of the Goleta crude asphalt and the refined liquid Obispo flux began to arrive, the Union Company and its guarantors noted a material discrepancy between the weight sheets attached to the Goleta wharfmaster's shipping receipt and the weight sheets attached to the carrier's bill of lading, on which the carrier's charges were demanded; and by letter dated January 6, 1904, this matter was brought to the attention of the Globe Company, to which the president of that company replied, on January 9, 1904, as follows:

"Yours of the 6th inst., inclosing paid freight bills, received. We note that the railroad weights differ from the wharfinger's weights; but, as the final settlement between your company and ours is to be based on the number of square yards of finished pavement laid per ton, we need pay no attention to this difference, except to call the wharfinger's attention to the matter, which we have already done."

On July 16, 1904, the paving to be done on Polymnia street had been completed, and the Union Company reported the same by letter of that date, addressed to the president of the Globe Company at its home office in Pittsburg, in which it says, in the first paragraph of the letter:

"We herewith inclose you credit mem. for $1,634.29, for proceeds of asphalt used on Polymnia street, as per your guaranty of 90 yards of finished pavement to the ton."

The body of the memorandum inclosed was in these words and figures:

"N. O., July 1/04.

For 44.17 tons of asphalt, $37.00..... $1,634.29

"Laid on Polymnia street, 3,975.38 sqr. yds. (official measurement) at 90 yards per ton, equal 44.17 tons."

In subsequent statements rendered to the Globe Company of expenditures made and the amount of asphalt used, the asphalt was

credited to the Globe Company on the basis of one ton for every 90 square yards of pavement laid, or of one ton for every 67½ yards of pavement laid, according to the thickness of the course constituting the pavement, respectively, and credited at the rate of $37 per ton so found. These statements so rendered by mail were duly received and retained, without notice of approval or objection being given by the Globe Company. The work was finally completed and accepted by the city, and, on April 10, 1905, the Globe Company served upon the Union Company and each of its guarantors a sworn statement purporting to show a balance in favor of the Globe Company of $56,176.18. The account of the Union Company, made up to April 15, 1905, showed a balance against the Globe Company of $707.90. Outside of several minor disputed charges, the whole discrepancy in these accounts arose from the difference in the interpretation of the contract by the two respective parties. The Globe Company based its statement on the theory that the Union Company was to pay for the crude Goleta asphalt at the rate of $37 per ton for that material, and for the refined liquid Obispo flux at the rate of $37 per ton for that material. There was a loss of over 40 per cent. in changing the Goleta crude asphalt, as the same was done in the Globe Company's refinery at New Orleans, into asphaltic cement that was used in paving the streets. This loss made the difference, substantially, of the $56,176.18 between the price claimed by the Globe Company and that contended for by the Union Company. The Union Company, rejecting the interpretation contended for by the Globe Company, refused payment of this account rendered. Thereupon the Globe Company entered its suit at law against the Union Company and its guarantors for the amount claimed. On motion of the defendants, not resisted by the plaintiffs, the Circuit Court ordered the pleadings to be reformed according to the practice in courts of equity, and in compliance therewith in due course the proper pleadings were filed. Thereupon the Circuit Court, of its own motion, ordered the case to be referred to a special master, with direction and authority to report on all questions of fact and law therein, his report to be merely advisory to the court.

The pleadings are extended and somewhat confusing, and the result of the pleadings and of the findings of the master and the substantial admissions of the parties bring the cause to a single issue, which is: Must the defendants pay for crude Goleta asphalt and for the refined Obispo flux, each, $37 per gross ton f. o. b. New Orleans, or must they pay for asphaltic cement net to them on the basis of the number of square yards of pavement laid. The special master duly reported, after full hearing, his findings of fact, resulting in the ultimate conclusion that the statement of the defendants, showing a balance of $707.90 due them by complainant, is correct, with the following exceptions (noting the exceptions), which change the balance from $707.90 against complainants to the sum of $1,074.12 in favor of the complainants. There were very numerous exceptions to the findings of the master, and at the hearing the Circuit Court sustained these exceptions and passed its decree in favor of the complainants. Due exceptions were reserved to this action of the court and are presented to us by the assignment of errors.

We are clear in our conviction that the Circuit Court erred in passing its decree for the complainants. The complainants insisted below, and now urge, that the letter of October 31, 1903, addressed to the Union Development & Construction Company, Limited, and their guarantors, and signed "The Globe Asphalt Company, J. A. Dubbs, President," and the letter of acceptance of November 19, 1903, addressed to Mr. J. A. Dubbs, President Globe Asphalt Company, and signed, "Union Development & Construction Company, Limited, A. Ledoux, President," "Alfred Hiller," "Sam. Hyman," and "Charles Godchaux," and the letter of guaranty of same date signed by the same parties, constitute a new, separate, unambiguous written contract, susceptible of no other construction than that which complainants put upon it. Without rehearsing the master's arguments, we concur with him in concluding that the contract claimed to be evidenced by the letters to which we have just referred is not plain and unambiguous, and that all competent evidence tending to throw light on what was the real intent of the parties should be considered. It is clear that from July 27 to October 31, 1903, the contract was that the Globe Company would sell to the Union Company Obispo asphalt at the price of $37 per ton, which would lay 90 square yards of pavement to the ton of 2,000 pounds, finished asphalt pavement, consisting of 1-inch binder course and a 1½-inch top or wearing surface; it being understood that in pavements consisting of 2-inch top coat and a 1½-inch binder course, the asphalt cement is to lay a proportionate number of square yards of pavement, or 67.5 yards to the net ton of asphaltic cement. From a consideration of all the proof, we conclude, with the master, that this feature of the contract was not changed by the writings of October 31st and November 19th, and that the account rendered by the Union Company on the basis of this construction of the contract was the correct account as to that item, and that the correction made by the master of some of the smaller details of debits and credits, showing a balance in favor of the complainant of $1,074.12, is correct, and should have been made the basis of the decree.

The decree is, therefore, in the largest part reversed, and is here so amended as to be rendered in favor of the appellee for the sum of $1.074.12, with legal interest from the date of the filing of complainant's bill, and that the costs in both courts be adjudged against the appellee.

(173 Fed. 433.)

ERBAUGH v. UNITED STATES.

(Circuit Court of Appeals, Eighth Circuit. November 1, 1909.)

No. 3,053.

1. POST OFFICE (§ 35*)—FRAUDULENT USE OF MAILS—STATUTES—CONSTRUCTION—INTENT TO EFFECT SCHEME BY CORRESPONDENCE WITH ONE'S SELF NO OFFENSE.

One who devises a fraudulent scheme, to be effected by opening or intending to open a correspondence or communication with himself by means of the post office establishment of the United States, is guilty of no offense punishable under section 5480, Rev. St. U. S. (U. S. Comp. St. 1901, p. 3696).

A fraudulent scheme, which the deviser intends to effect by either opening or intending to open a correspondence or communication with some other person by means of the post office establishment, or by inciting some other person to open communication with him, is essential to the offense.

[Ed. Note.—For other cases, see Post Office, Cent. Dig. § 55; Dec. Dig. § 35.*]

2. STATUTES (§ 241*)—CONSTRUCTION—PENAL STATUTE INCLUDES PARTIES WITHIN ITS EXPRESS TERMS ONLY.

A penal statute, which creates and prescribes the punishment for a new offense, must be strictly construed.

One who was not beyond reasonable doubt by the express terms of the statute within the class of those punishable thereunder may not be brought within it after the event by interpretation.

Ex post facto law by judicial construction is as pernicious as ex post facto legislation.

[Ed. Note.—For other cases, see Statutes, Cent. Dig. §§ 322-323; Dec. Dig. § 241.*]

(Syllabus by the Court.)

In Error to the District Court of the United States for the District of Colorado.

Charles O. Erbaugh was convicted of using the mails to defraud, and brings error. Reversed and remanded.

Caesar A. Roberts and Henry J. O'Bryan, for plaintiff in error.

Ralph Hartzell, Asst. U. S. Atty., and Thomas Ward, Jr., U. S. Atty.

Before SANBORN and VAN DEVANTER, Circuit Judges, and WILLIAM H. MUNGER, District Judge.

SANBORN, Circuit Judge. The complaint in this case is that the defendant below was convicted and sentenced for using the mails to defraud, in violation of section 5480 of the Revised Statutes (3 U. S. Comp. St. 1901, p. 3696, Act June 8, 1872, c. 335, 17 Stat. 323, as amended by Act March 2, 1889, c. 393, § 1, 25 Stat. 873).

There are many specifications of error, but the most serious one is that the defendant's motion for arrest of judgment upon the ground that the indictment charged no offense was denied, and he was sentenced for devising a fraudulent scheme to be effected by intending to open and opening a correspondence with himself by means of the post

office establishment, when the only offense denounced by the statute is devising a fraudulent scheme to be effected, either by opening or intending to open correspondence with some other person by means of the post office establishment, or inciting such other person to open communication with him. The statute, so far as material here, reads:

"If any person having devised or intending to devise any scheme or artifice to defraud, * * * to be effected by either opening or intending to open correspondence or communication with any person, whether resident within or outside the United States, by means of the post office establishment of the United States, or by inciting such other person or any person to open communication with the person so devising or intending, shall, in and for executing such scheme or artifice or attempting so to do," mail any letter or receive any letter from the mail, he shall, upon conviction, be punishable by a fine or imprisonment, or both.

The gravamen of this offense is not the intended or perpetrated fraud, but the intended use of the post office establishment of the United States to perpetrate the fraud. The charge in the indictment was that the defendant had devised a scheme to defraud which he "intended to effect by opening correspondence with himself under an assumed and fictitious name by means of the post office establishment of the United States," and that he assumed a false name and caused letters to be written, to be signed by that name, to be sent to and received by himself through the post office establishment for the purpose of carrying out his scheme to defraud.

The act forbidden by the statute is not the deposit in or the receipt from the Post Office Department of the United States of a letter or circular for the purpose of executing a fraudulent scheme, as in section 215 of the Criminal Code (Act March 4, 1909, c. 321, § 215, 35 Stat. 1130). It is the intent to effect the scheme to defraud by either opening or intending to open correspondence or communication with any person by means of the mails, or by inciting such other person or any person to open communication with the schemer.

The obvious and common meaning of opening or intending to open correspondence with a person imports distance between him who opens or intends to open it and his intended correspondent, which renders the use of the mails convenient or necessary, and that his correspondent is some other person than himself, for one cannot open communication with himself by means of the post office establishment by writing and sending letters to himself through the mails, because the communication with himself in such a case must necessarily be opened and intended to be opened when the letter is written and before it is mailed. The clause in this section of the statute, "or by inciting such other person or any person to open communication with the persons so devising or intending," clearly indicates that the person mentioned in the preceding clause, with whom the deviser opens or intends to open correspondence, is to be such "other person" and not himself.

In 1894 in Stokes v. United States, 157 U. S. 187, 188, 15 Sup. Ct. 617, 618, 39 L. Ed. 667, the Supreme Court declared that there were three matters of fact which must be charged in the indictment and established by the evidence under this statute, and that the second of these was that the persons charged "must have intended to effect this

scheme by opening or intending to open correspondence with some other persons through the post office establishment, or by inciting such other persons to open communication with them," and this proposition has been sustained without dissent by the opinions and the practice of the courts. United States v. Long (D. C.) 68 Fed. 348, 349; Milby v. United States, 109 Fed. 638, 640, 641, 48 C. C. A. 574; United States v. Post (D. C.) 113 Fed. 852, 853; Horman v. United States, 116 Fed. 350, 351, 53 C. C. A. 570; Stewart v. United States, 119 Fed. 89, 93, 55 C. C. A. 641; Ewing v. United States, 136 Fed. 53, 54, 69 C. C. A. 61, 62; Brown v. United States, 74 C. C. A. 214, 216, 219, 143 Fed. 60, 62, 65; Rumble v. United States, 143 Fed. 772, 776, 75 C. C. A. 30; United States v. Smith (D. C.) 166 Fed. 958, 960.

Counsel for the United States, in support of their contention that the intent to effect the scheme by opening correspondence with one's self constitutes an offense within the meaning of this statute, cite Weeber v. United States (C. C.) 62 Fed. 740, 741, and United States v. Ryan (D. C.) 123 Fed. 634. The opinion in the latter case is founded upon the decision in the Weeber Case, and a perusal of the indictment in the Weeber Case, which does not appear in the report, has disclosed the fact that it expressly charged that the defendant intended to effect his scheme by opening correspondence and communication by means of the post office establishment with another person, and the opinion of Mr. Justice Brewer shows that the defendant was charged with using the post office establishment to open a correspondence with one Stevens, or to incite the latter to open a correspondence with him. The question presented in this case was not at issue in the Weeber Case, was not presented to the court that decided that case, and it was not suggested to the minds of the judges who participated in its consideration. The decision in that case neither rules nor purports to rule the question under consideration here.

The offense denounced by section 5480 was created by that statute, the punishment it prescribes is severe, and a penal statute which creates and denounces a new offense should be strictly construed. The definition of the offense and the classification of the offenders are legislative, not judicial, functions, and one who was not beyond reasonable doubt within the class declared punishable by the expressed will of Congress may not be brought within that class after the event by interpretation. Ex post facto law by judicial construction is as pernicious as ex post facto legislation. United States v. Wiltberger, 5 Wheat. 77, 96, 5 L. Ed. 37; United States v. Germaine, 99 U. S. 508, 510, 25 L. Ed. 482; Martin v. United States (C. C. A.) 168 Fed. 198,[1] 202, 203; Field v. United States, 137 Fed. 6, 8, 69 C. C. A. 568, 570; United States v. Clayton, Fed. Cas. No. 14,814; In re McDonough (D. C.) 49 Fed. 360; United States v. Lake (D. C.) 129 Fed. 499.

At the time when the defendant is alleged to have committed the acts for which he was sentenced, the common and natural meaning of the terms of this section 5480, and the uniform judicial interpretation of it for many years, limited the class punishable under it to those who intended to effect their fraudulent schemes either by opening or by intending to open correspondence or communication with some

[1] 93 C. C. A. 484.

other person or persons by means of the post office establishment of the United States, or by inciting such other person or persons to open communication with them. This was the true interpretation of this law, and the averments in the indictment that the defendant intended to effect his scheme by opening correspondence or communication with himself by means of the post office establishment failed to bring his case within this statute and charged no offense against him.

The judgment below must accordingly be reversed, and the case must be remanded to the District Court, with directions to grant the motion in arrest of judgment, to set aside the verdict, to quash the indictment, and to discharge the defendant; and it is so ordered.

MEMORANDUM DECISIONS.

(173 Fed. 1019.)

BAGLIN v. CUSENIER CO. (Circuit Court of Appeals, Second Circuit. November 8, 1909.) No. 205. Appeal from and Writ of Error to the Circuit Court of the United States for the Southern District of New York. See, also, 156 Fed. 1015; 164 Fed. 25, 90 C. C. A. 499. A. L. Pincoffs and Roger Foster, for plaintiff in error and appellant. Philip Mauro, C. A. L. Massie, and Ralph L. Scott, for defendant in error and appellee. Before LACOMBE, COXE, and WARD, Circuit Judges.

PER CURIAM. We are satisfied it was error to hold defendant in contempt for translating the whole or any part of the label which the court said it might use; the court having expressly stated that such label might be translated into any language. No mistranslation is proved. Order reversed.

(173 Fed. 1019.)

BASS et al. v. FOREST PRODUCTS & MFG. CO. (Circuit Court of Appeals, Fifth Circuit. October 4, 1909.) No. 1,897. Appeal from the Circuit Court of the United States for the Southern District of Mississippi. For opinion below, see 161 Fed. 1004. R. V. Fletcher and R. V. Willing, for appellants. Garner Wynn Green and Marcellus Green (Marlin E. Olmsted, of counsel), for appellee. Before PARDEE, McCORMICK, and SHELBY, Circuit Judges.

SHELBY, Circuit Judge. The legal questions involved in this case are conceded by the counsel for both parties to be identical with those involved in Simpson County v. Wisner-Cox Lumber & Mfg. Co. (decided by this court May 10, 1909) 170 Fed. 52.[1] The only difference between this case and the one cited is that here the appellee, which claimed to own the lease for 99 years described in its bill, took the initiative and appeared in the court below as complainant. Demurrers were filed to the bill, which raised the same questions we decided in Simpson County v. Wisner-Cox Lumber & Mfg. Co., supra. The Circuit Court overruled the demurrers, and, after defendants had answered, sustained exceptions to the answer, and rendered final decree for the complainant, the appellee here. On the authority of Simpson County v. Wisner-Cox Lumber & Mfg. Co., supra, and the opinions of the Supreme Court of Mississippi there cited, the decree of the Circuit Court is reversed, and the cause remanded for further proceedings in conformity with the said opinion of this court.

[1] 95 C. C. A. 227.

(173 Fed. 1019.)

BROD v. J. K. ORR SHOE CO. et al. (Circuit Court of Appeals, Fifth Circuit. October 25, 1909.) No. 1,914. Appeal from the District Court of the United States for the Northern District of Georgia. Harry Dodd, and Thos. F. Rawls, for appellant. W. G. Post, for appellees.

PER CURIAM. In this case we reach the same conclusion as that reached by the District Judge, and the judgment of the District Court is affirmed. See 166 Fed. 1011.

(173 Fed. 1020.)

THE CHARLES E. MATTHEWS. THE EUGENE F. MORAN. THE SCOWS 15D AND 18D. (Circuit Court of Appeals, Second Circuit. November 29, 1909.) Appeals from the District Court of the United States for the Southern District of New York. Motion to amend mandate. For opinion below, see 170 Fed. 928. Before LACOMBE and NOYES, Circuit Judges.

PER CURIAM. The decision in The Express, 59 Fed. 476, 8 C. C. A. 182, applies. In the first of the above causes the interest to which libelant is entitled should be paid by the interests which, by appealing, tied up the litigation. In the second cause no interest should be allowed upon that part of the decree payable by the Matthews. We are not inclined to allow the claim for premiums paid on account of the stipulations for value. The decrees may be amended accordingly.

(173 Fed. 1020.)

COMMONWEALTH NAT. BANK v. FIDELITY & DEPOSIT CO. OF MARYLAND et al. (Circuit Court of Appeals, Fifth Circuit. December 7, 1909.) No. 2,008. Appeal from the Circuit Court of the United States for the Eastern District of Texas. Nelson Phillips and Yancey Lewis, for appellant. A. P. Wozencraft, Joseph A. L. Wolfe, and D. A. Frank, for appellees. Before PARDEE, McCORMICK, and SHELBY, Circuit Judges.

PER CURIAM. Without committing this court to the propositions that the letter of the Stevenson Contract Company to the disbursing agent constituted, under the evidence, an assignment of the contractor's claim against the government for the money then due on final estimate, and that as an assignment it was absolutely void or only voidable under sections 3477 and 3737, Rev. St. (U. S. Comp. St. 1901, pp. 2320, 2507), we hold that the Circuit Court had jurisdiction, and that the case was well ruled and correctly decided in regard to the equities involved. The decree of the Circuit Court is affirmed.

(173 Fed. 1020.)

CONTINENTAL OIL & COTTON CO. v. ARMOUR & CO. (Circuit Court of Appeals, Fifth Circuit. November 30, 1909.) No. 1,982. In Error to the Circuit Court of the United States, for the Northern District of Texas. S. P. Hardwicke, for plaintiff in error. H. M. Chapman, for defendant in error. Before PARDEE, McCORMICK, and SHELBY, Circuit Judges.

PER CURIAM. In this case trial by jury was waived, and a trial was had before the court. Our examination of the transcript results in finding that the general verdict found by the court is supported by the findings of fact and evidence incorporated in the bill of exceptions, and the judgment rendered on the verdict is consonant with the pleadings. Judgment affirmed.

(173 Fed. 1020.)

HOGUE v. UNITED STATES. (Circuit Court of Appeals, Fifth Circuit. December 7, 1909.) No. 1,919. In Error to the District Court of the United States for the Northern District of Texas. Israel Dreeben, for plaintiff in error. Wm. H. Atwell, for defendant in error. Before PARDEE, McCORMICK, and SHELBY, Circuit Judges.

PER CURIAM. A trial was had on two counts in the indictment. On the first the plaintiff in error was acquitted, and on the second convicted. The second count is good in form and substance, and the assignments of error in relation thereto are not well taken. The verdict thereon is fully supported by the evidence, all of which has been submitted to this court by the plaintiff in error in support of his motion in the court below to direct a verdict. On the entire record we find no reversible error, and the judgment of the Circuit Court is affirmed.

(173 Fed. 1021.)

HOUSTON OIL CO. OF TEXAS et al. v. POLLARD et al. (Circuit Court of Appeals, Fifth Circuit. December 7, 1909.) No. 1,997. Appeal and Cross-Appeal from the Circuit Court of the United States, for the Southern District of Texas. H. O. Head and T. M. Kennerly, for appellants. Presley K. Ewing, Sam Streetman, and Frank Andrews, for appellees. Before PARDEE, McCORMICK, and SHELBY, Circuit Judges.

PER CURIAM. The decree in favor of Ellen Lee Mason is affirmed, for the reasons given in the master's report; and the decree in favor of the Houston Oil Company against Uriah A. Pollard and others is affirmed, for the reasons given in the master's report, to wit: "The special master finds the title to the land claimed by them to be in the Houston Oil Company of Texas, and recommends judgment accordingly, because it is not shown that they have evidenced or set up any claim whatever to the land until November 17, 1908—more than 60 years after the execution of the deeds under which they hold—beyond the filing of their deeds for record in the deed records of a county, whose name is not given"—and because the evidence shows that the Houston Oil Company deraigned title through duly recorded deeds from the sovereign to the present time, under which deeds it and its predecessor have constantly asserted title to and exercised ownership since 1882 of the land in question, by returning the same for taxes, paying some taxes, appropriating timber thereon, and by frequent actual possession through agents and tenants. The costs of this court to be divided.

McCORMICK, Circuit Judge, concurs as to the decree in favor of Ellen Lee Mason, but dissents as to the appeal of Uriah A. Pollard and others.

(173 Fed. 1021.)

PHILIPS v. FABER SULKY CO. (Circuit Court of Appeals, Second Circuit. November 17, 1909.) No. 27. Appeal from the Circuit Court of the United States for the Western District of New York. This is an appeal from an interlocutory decree of the Circuit Court, Western District of New York, holding certain claims of letters patent 611,438, issued Sept. 27, 1898, to Philips, for a speed wagon, to be valid and infringed. The opinion of the Circuit Court is reported in 160 Fed. 966. Osgood & Davis, for appellant. L. H. Groat, for appellee. Before LACOMBE, COXE, and WARD, Circuit Judges.

PER CURIAM. We concur in the reasoning and conclusions of the judge who heard the cause at circuit, and do not find it necessary further to discuss the patent or the proofs. It is contended that the claims should be so narrowly construed that defendant's structure will not infringe. The defendant's truss frame does not extend upward "perpendicularly from the spindles," nor "between two vertical planes from said spindles"; the quoted phrases being

taken from claims 1 and 2, respectively. But the deflection from the perpendicular is slight, and effects no new result; and we are of the opinion that a truss substantially perpendicular to the spindles is fairly within the claim, concurring with Judge Hazel in his conclusions as to infringement. It is contended, however, that the words "perpendicular" and "vertical" are to be strictly construed, for the reason that they were inserted while the application was pending in the Patent Office, after rejection of original claims upon a reference to patent to Wells, No. 577,339, for a sulky. The theory is that the Patent Office required applicant to make an election, either to be rejected on this reference or to avoid the reference by confining himself strictly to an absolutely perpendicular truss. But we are not satisfied that this theory is correct, or that it was the insertion of the words "perpendicular" and "vertical" that saved the claims. The proposed amended claims were inclosed in a letter to the examiner, which discussed the Wells sulky and pointed out that it did not have the inclined brace, which was referred to in applicant's specification as "particularly effective." Presumably this argument convinced the examiner—the Wells sulky was quite a different contrivance—and induced allowance of the claims. It is difficult to see how the mere restriction of them to perpendicular trusses would have avoided the reference, because in the Wells sulky the "main or central bow, 4," on which alone the driver's seat is mounted, extends up perpendicularly from the spindles, so that "its top portion [is] directly over the axles of the wheels." Decree affirmed, with costs.

(173 Fed. 1022.)

RICE et al. v. McGREW. (Circuit Court of Appeals, Fifth Circuit. November 16, 1909.) No. 1,946. Appeal from the Circuit Court of the United States for the Southern District of Texas. Clarence R. Wharton, for appellants. John W. Parker, for appellee. Before PARDEE, McCORMICK, and SHELBY, Circuit Judges.

PER CURIAM. This case is one for damages on behalf of a minor, a deaf mute, to recover damages from the receivers, operating a sawmill under the appointment and orders of the Circuit Court in the case of Maryland Trust Company v. Kirby Lumber Company, and it is appealed here by the said receivers, complaining of the finding of facts made by the special master. The report of the special master on law and facts seems to have been well considered, and, as it was approved and confirmed by the Circuit Court, we are not disposed to go behind it. The decree of the Circuit Court is therefore affirmed.

(173 Fed. 1022.)

SANGER v. ROVELLO et al. (Circuit Court of Appeals, Fifth Circuit. December 7, 1909.) No. 2,010. In Error to the Circuit Court of the United States for the Western District of Texas. H. C. Lindsey, for plaintiff in error. Richard I. Munroe and J. R. Downs, for defendants in error. Before PARDEE, McCORMICK, and SHELBY, Circuit Judges.

PER CURIAM. The plaintiff in error took no better title to the property purchased at execution sale than Peter McClellan had; and said Peter McClellan, as appears by the record, had no title subject to execution, as settled in the courts of the state of Texas long prior to plaintiff in error's purchase. See McClelland v. McClelland (Tex. Civ. App.) 37 S. W. 350; Wood v. McClelland (Tex. Civ. App.) 53 S. W. 381; McClelland v. McClelland, 46 Tex. Civ. App. 26, 101 S. W. 1171. The judgment of the Circuit Court is affirmed.

(173 Fed. 1022.)

TEXAS CANNEL COAL CO. v. CONSUMERS' LIGNITE CO. (Circuit Court of Appeals, Fifth Circuit. November 30, 1909.) No. 1,986. Appeal from the Circuit Court of the United States for the Northern District of Texas.

Bennett Hill, for appellant. J. M. McCormick, for appellee. Before PARDEE, McCORMICK, and SHELBY, Circuit Judges.

PER CURIAM. The controversy in this case is over the amount of damages to be recovered for lignite unlawfully removed by the appellant from appellee's land; the question being whether the trespass was inadvertent or willful. We find that Lowery, the general manager, was the representative of the appellant in determining how far mining operations should be carried on and extended, and it was conceded that he had full knowledge of the trespass committed. See U. S. v. Ute Coal & Coke Co., 158 Fed. 20, 85 C. C. A. 302. The decree of the Circuit Court is affirmed.

(173 Fed. 1022.)

TEXAS & P. RY. CO. v. MORRIS et al. (Circuit Court of Appeals, Fifth Circuit. November 16, 1909.) No. 1,917. In Error to the Circuit Court of the United States for the Eastern District of Texas. F. H. Prendergast, for plaintiff in error. S. P. Jones, for defendants in error. Before PARDEE, McCORMICK, and SHELBY, Circuit Judges.

PER CURIAM. All the assignments of error in this case complain of erroneous charges to the jury; but the record shows no seasonable exceptions were taken in the court below, either to the judge's charge as a whole or to any part thereof. The judgment of the Circuit Court is affirmed.

(173 Fed. 1023.)

TRADERS' NAT. BANK v. RUMSEY et al. (Circuit Court of Appeals, Fifth Circuit. November 30, 1909.) No. 1,983. Appeal from the Circuit Court of the United States for the Northern District of Texas. W. P. McLean, S. B. Cantey, and R. L. Carlock, for appellant. John W. Wray, for appellees. Before PARDEE, McCORMICK, and SHELBY, Circuit Judges.

PER CURIAM. The record shows that the transactions of Lee M. Rumsey with the Ft. Worth Machine & Foundry Company, wherein the said foundry company issued five promissory notes for the purchase of the stock of the said Rumsey, and granted its mortgage upon all the property of the company to secure payment of the same, were prior to the acquisition of interest by the appellants in this case, and that by the recording of the mortgage according to law and otherwise appellants had full notice of the same. The decree of the Circuit Court is affirmed.

(173 Fed. 1023.)

UNITED STATES v. LECHENGER et al. (Circuit Court of Appeals, Fifth Circuit. November 9, 1909.) No. 1,868. In Error to the District Court of the United States for the Western District of Texas. Chas. A. Boynton, for the United States. Winchester Kelso and Chas. W. Ogden, for defendants in error. Before PARDEE, McCORMICK, and SHELBY, Circuit Judges.

PER CURIAM. This case, brought by information in rem for the condemnation of certain alleged smuggled goods, was tried on the claimants' plea of former jeopardy by the court under a stipulation in writing waiving a jury, and the finding was general in favor of the claimants. The assignments of error suggest conclusions of law based upon the evidence. There was no finding of facts nor bill of exceptions showing the evidence or any rulings of the court in the progress of the trial, and the only questions reviewable are as to the sufficiency of the pleadings to warrant the judgment of the court. The pleadings are sufficient, and the judgment of the District Court is therefore affirmed, on authority of Coffey v. United States, 116 U. S. 436, 6 Sup. Ct. 437, 29 L. Ed. 684; United States v. McKee, Fed. Cas. No. 15,688.

(173 Fed. 1023.)

WILLIAM A. FORCE & CO., Inc., v. BATES MACH. CO. (Circuit Court of Appeals, Second Circuit. October 14, 1909.) No. 100. Appeal from the Circuit Court of the United States for the Eastern District of New York. For opinions below, see 169 Fed. 647; 170 Fed. 446. Before LACOMBE, COXE, and WARD, Circuit Judges.

PER CURIAM. Affirmed, without costs, by consent.

END OF CASES IN VOL. 97.

INDEX.

ABATEMENT AND REVIVAL.

§ 1. **Transfer or devolution of title, right, interest, or liability.**
A pending action to recover damages is not abated by a judicial sale of the plaintiff's property, including the chose in action in suit, and proof of such sale constitutes no defense to the action.
—Pennsylvania R. Co. v. International Coal Mining Co., 173 Fed. 1.. 97 C. C. A. 384

ACCEPTANCE.

Of goods sold in general, see Sales, § 3.

ACCIDENT.

Cause of death, see Death, § 1.

ACCORD AND SATISFACTION.

See Payment.

ACKNOWLEDGMENT.

Operation and effect of admissions as evidence, see Criminal Law, § 1; Evidence, § 1.
Operation and effect of admissions as ground of estoppel, see Estoppel, § 1.

ACTION.

Abatement, see Abatement and Revival.
Jurisdiction of courts, see Courts.
Restraining action at law, see Injunction, § 1.

Actions between parties in particular relations.

See Master and Servant, § 1.

Actions by or against particular classes of persons.

See Corporations, § 3; Master and Servant, § 2.
Taxpayers, see Municipal Corporations, § 1.
Trustee in bankruptcy, see Bankruptcy, § 3.

Particular causes or grounds of action.

See Death, § 1; Insurance, § 1; Libel and Slander, § 3; Negligence, § 2.
Infringement of patent, see Patents, § 5.
Infringement of trade-mark or trade-name, see Trade-Marks and Trade-Names, § 2.

Injuries caused by negligence of servant, see Master and Servant, § 2.
Injuries from operation of railroad, see Railroads, § 1.
Injuries to servant, see Master and Servant, § 1.
Loss of or injuries to cargo, see Shipping, § 3.
Recovery of freight on cargo, see Shipping, § 3.

Particular forms of action.

See Ejectment.

Particular forms of special relief.

See Injunction; Specific Performance.
Enforcement or foreclosure of lien, see Maritime Liens, § 2.

Particular proceedings in actions.

See Depositions; Evidence; Stipulations; Trial.

Particular remedies in or incident to actions.

See Injunction.

Proceedings in exercise of special or limited jurisdictions.

Criminal prosecutions, see Criminal Law.
Suits in admiralty, see Admiralty; Maritime Liens, § 2.
Suits in equity, see Equity.

Review of proceedings.

See Appeal and Error.

ADJUDICATION.

In bankruptcy, see Bankruptcy, § 2.
Of courts in general, see Courts, § 1.

ADMINISTRATION.

Of estate of bankrupt, see Bankruptcy, § 3.

ADMIRALTY.

See Collision; Maritime Liens; Salvage; Seamen; Shipping.

§ 1. Evidence, and taking and filing proofs.
It is the better practice to introduce the log of a vessel in evidence, after being duly authenticated, to prove facts stated therein, rather than to rely on the testimony of the officer who made the entries after reading the same, when much time has elapsed, and the facts are of such a character, that he cannot be supposed to have any independent recollection of them.
—Bacon v. Conroy, 172 Fed. 532.....97 C. C. A. 158

ADMISSIONS.

As evidence in civil actions, see Evidence, § 1.
As evidence in criminal prosecutions, see Criminal Law, § 1.

ADVERSE POSSESSION.

§ 1. Nature and requisites.
Possession of land, although in admitted subordination to the United States, from which the person in possession is seeking to obtain title, may

nevertheless be adverse to every one else, and, when continued for the statutory period, may be set up in bar to an action by one claiming under a prior grant.
—Eastern Oregon Land Co. v. Brosnan, 173 Fed. 67..97 C. C. A. 382

The notorious actual possession of real estate is notice to all of the title and of the rights of the possessors thereto.
—Central Coal & Coke Co. v. Penny, 173 Fed. 340...97 C. C. A. 600

§ 2. Operation and effect.
A conclusive legal presumption of a grant of the character necessary to sustain title in the possessor arises from the exclusive, uninterrupted, adverse possession of real estate for 20 years, unless there is proof that such a title could not have been acquired by the possessor by any legal possibility.
—Central Coal & Coke Co. v. Penny, 173 Fed. 340...97 C. C. A. 600

The fact that the grantor, under whom the plaintiffs, who had been in exclusive possession for more than 20 years, claimed, had attempted in vain to convey the land to others, is no substantial proof that he could not, by any legal possibility, have conveyed the land in the possession of the plaintiffs to them.
—Central Coal & Coke Co. v. Penny, 173 Fed. 340...97 C. C. A. 600

AFFIDAVITS.

See Depositions.

AFFREIGHTMENT.

Contracts, see Shipping, § 8.

AGREEMENT.

See Contracts.

AGRICULTURE.

Irrigation, see Waters and Water Courses, § 4.

ALASKA.

Apportionment of license fees in towns, see Licenses, § 1.

ALIENS.

See Indians.
Right to sue for wrongful death, see Death, § 1.

§ 1. Exclusion or expulsion.
The minor son of a Chinese merchant lawfully domiciled in the United States, who immigrated and entered the United States while a minor without trick, deception, or fraud, under a certificate issued by the Registrar General at Hongkong and vised by the acting United States Consul General at the same place, and who during the remainder of his minority labored and studied in the United States, is entitled to remain after attaining his majority, though he has since worked as a laborer.
—United States v. Foo Duck, 172 Fed. 856.....97 C. C. A. 204

ALLOTMENT.

Of Indian lands, see Indians.

AMOUNT IN CONTROVERSY.

Jurisdictional amount, see Courts, § 2.

ANIMALS.

Carriage of live stock, see Carriers, § 3.
Taxation of live stock, see Taxation, § 1.

ANTICIPATION.

Of patent, see Patents, § 1.

APPEAL AND ERROR.

Review of bankruptcy proceedings, see Bankruptcy, § 5.
Review of criminal prosecutions, see Criminal Law, § 3.

§ 1. Right of review.

A stipulation by the parties to a suit that no appeal shall be taken from the decree of the trial court, if based on a valid and legal consideration, will be enforced by the appellate court, and an appeal, if taken, dismissed.

—United States Consol. Seeded Raisin Co. v. Chaddock & Co., 173 Fed. 577.....97 C. C. A. 527

An appeal dismissed, as in violation of a valid stipulation not to appeal.

—United States Consol. Seeded Raisin Co. v. Chaddock & Co., 173 Fed. 577.....97 C. C. A. 527

§ 2. Presentation and reservation in lower court of grounds of review.

The rule applied that, under the federal practice, a party who relies on a general objection to evidence must show that the defects in the evidence admitted, which are relied on, could not have been cured by the party offering it, if his attention had been called to them.

—Wellington v. Pelletier, 173 Fed. 908.....97 C. C. A. 458

It is indispensable to the review in a federal appellate court of a ruling upon a request for an instruction to the jury that it should have been challenged by an exception.

—American Smelting & Refining Co. v. Karapa, 173 Fed. 607..... 97 C. C. A. 517

It is the settled rule of the federal courts that a charge not excepted to below cannot be assigned as error in a court of review.

—Louisville & N. R. Co. v. Womack, 173 Fed. 752....97 C. C. A. 559

A motion by defendant at the close of the evidence for a directed verdict, although not required by the practice of the Circuit Court of Appeals to specify the grounds on which it is based, will not be considered by such court as embracing the question of the applicability of a state statute to the facts of the case, where it was tried by both parties on the theory that the statute was applicable, and submitted to the jury by the court on such theory by instructions to which no exceptions were taken.

—Louisville & N. R. Co. v. Womack, 173 Fed. 752....97 C. C. A. 559

§ 3. Record and proceedings not in record.

The refusal of requests to charge cannot be reviewed on a writ of error, where the bill of exceptions does not contain the entire charge given.

—National Cash Register Co. v. Salling, 173 Fed. 22..97 C. C. A. 334

Assignments of error relating to the admission of evidence cannot be considered, where the record contains only a portion of the evidence.
—Johnson v. Willapa Lumber Co., 173 Fed. 488.....97 C. C. A. 494

Assignments of error relating to instructions cannot be considered where the record contains only a portion of the charge of the court.
—Johnson v. Willapa Lumber Co., 173 Fed. 488.....97 C. C. A. 494

§ 4. **Review.**
Permitting leading and suggestive questions to a witness, over objection, may constitute reversible error, where the answers elicited are the only basis in the evidence for an instruction given on a material issue.
—Baldi v. Cedar Hill Coal & Coke Co., 173 Fed. 781..97 C. C. A. 505

When a federal trial court has jurisdiction to grant or refuse a new trial, its order on the subject is discretionary, and it is not reviewable in an appellate court.
—American Smelting & Refining Co. v. Karapa, 173 Fed. 607.....
97 C. C. A. 517

APPLIANCES.

Liability of employer for defects, see Master and Servant, § 1.

APPORTIONMENT.

Of license fees, see Licenses, § 1.
Of salvage compensation, see Salvage, § 2.

APPROPRIATION.

Of water rights in public lands, see Waters and Water Courses, § 1.

ARREST.

Illegal arrest, see False Imprisonment.

§ 1. **On criminal charges.**
Under Code Civ. Proc. N. Y. § 177, which allows an arrest by an officer without a warrant only for a crime committed or attempted in his presence, or when the person arrested has committed a felony, although not in his presence, or when a felony has in fact been committed and he has reasonable cause for believing the person arrested to have committed it, the arrest without a warrant of a person charged only with a misdemeanor not committed in the officer's presence is illegal.
—Knickerbocker Steamboat Co. v. Cusack, 172 Fed. 358.....
97 C. C. A. 56

ASSESSMENT.

Of tax, see Taxation, § 2.

ASSIGNMENTS.

In bankruptcy, see Bankruptcy, § 3.
Of patents, see Patents, § 4.

ASSIGNMENTS FOR BENEFIT OF CREDITORS.

See Bankruptcy, § 3.

ASSUMPTION.

Of risk by employé, see Master and Servant, § 1.

AUTHORITY.

To arrest without warrant, see Arrest, § 1.

AUTOMOBILES.

Negligence of chauffeur as imputed to occupant, see Negligence, § 1.

BAILMENT.

See Carriers, § 2.

BANKRUPTCY.

§ 1. Constitutional and statutory provisions.

The constitutional requirement that a bankruptcy law shall be uniform throughout the United States means no more than that it shall by its terms be applicable alike to all of the states, and does not require uniformity in its operation on the varying rights of debtor and creditor under the laws of the several states. Such provision has no bearing on the right of dower of a bankrupt's wife, which depends entirely on the state laws.

—Thomas v. Woods, 173 Fed. 585.....97 C. C. A. 535

§ 2. Petition, adjudication, warrant, and custody of property.

It is at least doubtful whether a receiver appointed for the property of an alleged bankrupt on the filing of an involuntary petition against him, in the absence of an express provision to that effect, can delegate to another his authority originally to take possession of the property; and in any event the alleged bankrupt or members of his family cannot be held in contempt of court for a refusal to surrender property or books and papers to one claiming to represent the receiver, but who produces no written evidence of his authority.

—Skubinsky v. Bodek, 172 Fed. 340.....97 C. C. A. 38

A receiver in bankruptcy, appointed under Bankr. Act July 1, 1898, c. 541, § 2 (3), 30 Stat. 545 (U. S. Comp. St. 1901, p. 3421), is charged with the duty of preserving the property of the bankrupt, and to that end, where property is situated at a distance from the court of his appointment and is in danger of being dissipated through sales by judgment creditors, which would cause irreparable damage to the estate before he can apply to that court, he may maintain any plenary suit or action necessary for its protection in the district where the property is situated.

—In re Dempster, 172 Fed. 353; Dempster v. Waters-Pierce Oil Co., Id. .....97 C. C. A. 51

The validity of an adjudication of bankruptcy cannot be collaterally attacked by a creditor in a court of another jurisdiction.

—In re Dempster, 172 Fed. 353; Dempster v. Waters-Pierce Oil Co., Id. .....97 C. C. A. 51

A court of bankruptcy is without jurisdiction, on a petition or motion filed by a receiver in bankruptcy appointed in another district, to appoint an ancillary receiver; its power to entertain such a petition or motion, or to grant such relief, being limited to causes or proceedings regularly pending before it.

—In re Dempster, 172 Fed. 353; Dempster v. Waters-Pierce Oil Co., Id. .....97 C. C. A. 51

A court of bankruptcy is without jurisdiction, on a petition or motion filed by a receiver in bankruptcy appointed in another district, to grant an injunction to restrain a sale of property of the bankrupt within its district; its power to entertain such a petition or motion, or to grant such relief, being limited to causes or proceedings regularly pending before it.
—In re Dempster, 172 Fed. 353; Dempster v. Waters-Pierce Oil Co., Id. .....97 C. C. A. 51

Under the bankruptcy law there are no courts of primary and ancillary jurisdiction; but the jurisdiction of the court which makes an adjudication extends to all property of the bankrupt situated anywhere in the United States, and it may make such orders with respect thereto as are necessary for the preservation, collection, and administration of such property.
—In re Dempster, 172 Fed. 353; Dempster v. Waters-Pierce Oil Co., Id. .....97 C. C. A. 51

Where a third party claims an interest in property which was in the possession of a bankrupt at the time of the bankruptcy and passed into that of his trustee, the referee may by a summary proceeding require such third party to appear in the bankruptcy court and present his claim, and may adjudicate the rights of the parties in respect thereof.
—Mound Mines Co. v. Hawthorne, 173 Fed. 882.....97 C. C. A. 394

Where a corporation's articles provided that the corporation's activities should be the roofing of buildings and other structures, the installation of heating apparatus, the construction of houses and other structures, and the carrying on of a general roofing, heating, and construction business, and such was the corporation's principal business, its manufacturing being only incidental thereto, it was not engaged in manufacturing within the bankruptcy act of 1898, and was not subject thereto.
—Walker Roofing & Heating Co. v. Merchant & Evans Co., 173 Fed. 771 .....97 C. C. A. 495

Evidence that a corporation's predecessors in business had sold considerable merchandise was irrelevant on the issue whether the corporation was a manufacturing or business corporation within the bankruptcy act.
—Walker Roofing & Heating Co. v. Merchant & Evans Co., 173 Fed. 771 .....97 C. C. A. 495

On an involuntary bankruptcy petition against a corporation, the burden is on petitioner to show by a preponderance of the evidence that the corporation conducted a business which could be properly termed "manufacturing," "trading," or "mercantile."
—Walker Roofing & Heating Co. v. Merchant & Evans Co., 173 Fed. 771 .....97 C. C. A. 495

The term "manufacturing," as used in the bankruptcy act of 1898, authorizing involuntary bankruptcy against corporations engaged in manufacturing, embraces only such corporations as are engaged in manufacturing as a business and selling their wares on the market, doing those things usually done by those who not only manufacture their wares and goods, but place them on the market for sale either by wholesale or retail.
—Walker Roofing & Heating Co. v. Merchant & Evans Co., 173 Fed. 771 .....97 C. C. A. 495

The conducting by a corporation of a shop for the repairing of automobiles, which repairing consisted chiefly in the adjusting of parts purchased from other persons, was not a manufacturing pursuit, within the meaning of Bankr. Act 1898, c. 541, § 4b, 30 Stat. 547 (U. S. Comp. St. 1901, p. 3423), which subjected the corporation to proceedings in bankruptcy.
—Cate v. Connell, 173 Fed. 445.....97 C. C. A. 647

Where the business of a corporation, as stated in its charter, included some pursuits which are within and others which are without the operation of the bankruptcy law, whether or not it is subject to the act depends

on the principal business in which it was actually engaged at or about the time the petition was filed.

—Cate v. Connell, 173 Fed. 445.....97 C. C. A. 647

§ 3. Assignment, administration, and distribution of bankrupt's estate.

Bankr. Act July 1, 1898, c. 541, § 21a, 30 Stat. 552 (U. S. Comp. St. 1901, p. 3430), which empowers a court of bankruptcy to require a bankrupt to appear before a referee "to be examined concerning the acts, conduct or property of a bankrupt, whose estate is in process of administration under this act," does not authorize a reference for the examination of an alleged bankrupt before his adjudication and before the time has arrived when he is required to answer the petition, on motion of a receiver appointed for his property, which cannot be said to be "in process of administration" under the act; the function of the receivership being solely preservative of the estate, and not administrative.

—Skubinsky v. Bodek, 172 Fed. 332.....97 C. C. A. 116

Where an indorser of a bankrupt's paper, well secured by the indorser's collateral, paid the paper to the bank and charged the amount against its debt on open account to the bankrupt, equity did not require that the payment be held to constitute a preference to the bank by the bankrupt on the theory that the transaction was an evasion of Bankrupt Act, July 1, 1898, c. 541, § 68b, 30 Stat. 565 (U. S. Comp. St. 1901, p. 3450), providing that a set-off or counterclaim shall not be allowed in favor of any debtor of a bankrupt which was purchased by or transferred to him, after the filing of the petition or within four months before such filing, with a view to such use, and with knowledge or notice that the bankrupt was insolvent or had committed an act of bankruptcy.

—Mason v. National Herkimer County Bank of Little Falls, 172 Fed. 529 .....97 C. C. A. 155

The S. Company in January received a bankrupt's note in payment for certain machinery and merchandise, which the S. Company indorsed and discounted at defendant bank. The note was renewed from time to time, being secured by the S. Company's collateral, in which the bankrupt had no interest until on September 26, 1903, before the maturity of the last renewal, the S. Company paid the note to the bank from its own funds, received back its collateral, and charged the amount to the bankrupt's account; the S. Company being then indebted to the bankrupt on such account in a sum in excess of the amount of the note, and within four months the adjudication was entered. *Held*, that such facts did not justify an inference that the note was paid by the bankrupt, or with its property, and hence the payment of the note by the S. Company was not a voidable preference as to the bank.

—Mason v. National Herkimer County Bank of Little Falls, 172 Fed. 529 .....97 C. C. A. 155

Bankr. Act July 1, 1898, c. 541, § 68b, 30 Stat. 565 (U. S. Comp. St. 1901, p. 3450), provides that a set-off or counterclaim shall not be allowed in favor of any debtor of a bankrupt which was purchased by or transferred to him after the filing of the petition or within four months before such filing with a view to such use, and with knowledge or notice that the bankrupt was insolvent, or had committed an act of bankruptcy. *Held*, that where an indorser of a bankrupt's paper took it up within four months prior to bankruptcy, knowing that the bankrupt was insolvent, and for the purpose of setting it off against its debt to the bankrupt, it was not available as a set-off as against the bankrupt's trustee.

—Mason v. National Herkimer County Bank of Little Falls, 172 Fed. 529 .....97 C. C. A. 155

It is essential to a voidable preference in bankruptcy that the bankrupt shall have transferred some portion of his own property to the creditor.

—Mason v. National Herkimer County Bank of Little Falls, 172 Fed. 529 .....97 C. C. A. 155

A New York banking house, by agreement, and in order to provide security for drafts drawn by it in the course of business on its correspondent in Manchester, England, placed certain stocks and bonds either transferable by delivery or indorsed in blank in an envelope in its safe deposit vaults marked "Escrow, for account of" the Manchester house, which was furnished with a list of the securities giving their market value. The New York house also entered the transfers on its books and with permission of the Manchester house, from time to time, withdrew certain of the securities and substituted others of equal value. The arrangement was made in entire good faith and continued for a number of years, when the New York house, having then outstanding unprotected drafts, and its condition having become uncertain by reason of a panic, delivered the securities to an agent of the Manchester house and within four months thereafter was adjudged a bankrupt. *Held:* That the Manchester house had an equitable lien on the securities while in the possession of its debtor in the nature both of a mortgage and an agreement for a pledge which gave it the right to take possession of the same at any time; that, when it took possession, it did so by virtue of such prior right, and its title was that of mortgagee and pledgee, relating back to the time of the original transaction, and did not constitute a transfer of property within four months of the bankruptcy, which could be avoided as a preference under Bankr. Act July 1, 1898, c. 541, § 60b, 30 Stat. 562 (U. S. Comp. St. 1901, p. 3445).

—Sexton v. Kessler & Co., 172 Fed. 535.....97 C. C. A. 161

On the filing of a petition in bankruptcy, all property held by or for the bankrupt is brought within the custody of the court of bankruptcy, and upon adjudication that court is vested with jurisdiction to determine all liens or interests affecting it, which jurisdiction is coextensive with the United States.

—Thomas v. Woods, 173 Fed. 585.....97 C. C. A. 535

Bankruptcy acts are intended to deal only with the property of the debtor, which is subject to his debts and cannot affect his wife's dower interest, which by the law of the state can neither be alienated nor extinguished by him nor seized by his creditors. Bankr. Act July 1, 1898, c. 541, § 8a, 30 Stat. 549 (U. S. Comp. St. 1901, p. 3425), providing that the death of a bankrupt shall not abate the proceedings, which shall be conducted in the same manner as though he had not died, "provided that in case of death the widow and children shall be entitled to all rights of dower and allowance fixed by the laws of the state of the bankrupt's residence," applies by its terms only in case of the bankrupt's death, and in that case the proviso, inserted out of an abundance of caution, is not intended to restrict the widow's dower rights, but to preserve such rights as may have been rendered doubtful by the prior proceedings, and where the bankrupt is still living such proviso does not prevent his wife from asserting her inchoate right of dower in his lands in accordance with the laws of the state in which they are situated.

—Thomas v. Woods, 173 Fed. 585.....97 C. C. A. 536

The right of a bankrupt's wife to dower in lands owned by him is governed by the laws of the state in which the land is situated, and is not affected by the right of homestead and exemption given by the law of his domicile.

—Thomas v. Woods, 173 Fed. 585.....97 C. C. A. 536

A trustee in bankruptcy represents all persons interested in the estate, and may enforce in the court of bankruptcy equitable rights existing in favor of certain of the creditors only.

—In re Bothe, 173 Fed. 597.....97 C. C. A. 547

§ 4. Rights, remedies, and discharge of bankrupt.

A specification of objection to the discharge of a bankrupt on the ground that he made a false oath to his schedules is sufficient, where it alleged that such schedules contained no mention of certain stocks, or of any interest therein or claim against any third person on account of the same,

but that shortly after the adjudication the bankrupt commenced a suit to recover such stocks from one to whom he alleged that he had pledged the same and claiming to be their owner; and proof of such allegations and of the bankrupt's ownership of the stocks subject to the rights of the alleged pledgee is sufficient to bar his right to a discharge.

—Remmers v. Merchants'-Laclede Nat. Bank of St. Louis, 173 Fed. 484 .....97 C. C. A. 490

To justify the denial of a bankrupt's discharge on the ground that he made a false oath to his schedules, the evidence must be of sufficiently clear and convincing character to overcome the presumption of his honesty; but it is not required to be of the high degree necessary to sustain a conviction for perjury.

—Remmers v. Merchants'-Laclede Nat. Bank of St. Louis, 173 Fed. 484 .....97 C. C. A. 490

To justify the omission by a bankrupt of property from his schedule on the ground that he acted on advice of counsel, it must be shown that he fully and fairly stated the facts to his counsel, and acted on his opinion on a matter of law only.

—Remmers v. Merchants'-Laclede Nat. Bank of St. Louis, 173 Fed. 484 .....97 C. C. A. 490

§ 5. Appeal and revision of proceedings.

A decree of a District Court in bankruptcy, summarily adjudicating the right to property in the possession of a trustee as between him and an adverse claimant, is reviewable by appeal.

—Mound Mines Co. v. Hawthorne, 173 Fed. 882.....97 C. C. A. 394

The petition of a trustee in bankruptcy, filed in the bankruptcy court, to have certain adverse claims and liens on property belonging to the estate declared void, and for a sale of the property free and clear of the same, has all the elements of a suit in equity, and the decision therein is reviewable by the Circuit Court of Appeals on appeal, under Bankr. Act July 1, 1898, c. 541, § 24a, 30 Stat. 553 (U. S. Comp. St. 1901, p. 3431).

—Thomas v. Woods, 173 Fed. 585.....97 C. C. A. 535

BANKS AND BANKING.

§ 1. Functions and dealings.

Where a bank purchased certain securities at the suggestion of its vice president, who announced that he would make the purchase on behalf of the bank, and subsequently informed the directors that he had done so, and still later turned over certain of the securities to the bank with a letter authorizing it to receive the balance, and at the trial of an action for conversion acknowledged that his intention had been to turn over the securities to the bank on payment of a note for which they were pledged, his possession of the securities was the possession of the bank, and title to the securities was in it.

—Metropolitan Trust Co. of New York v. McKinnon, 172 Fed. 846... 97 C. C. A. 194

That a bank's purchase of stock in another bank was ultra vires did not prevent it from getting title to the stock, both because an ultra vires contract is simply unauthorized and not forbidden by law, and because the passing of title depends on the intention of the parties and the performance of the requisite formalities by the parties, regardless of whether they are engaged in an illegal enterprise.

—Metropolitan Trust Co. of New York v. McKinnon, 172 Fed. 846... 97 C. C. A. 194

§ 2. National banks.

Purchase of national bank stock for speculation by a national bank is ultra vires.

—Metropolitan Trust Co. of New York v. McKinnon, 172 Fed. 846... 97 C. C. A. 194

"Willful misapplication" of the funds of a national bank, in order to constitute an offense denounced by Rev. St. § 5209 (U. S. Comp. St. 1901, p. 3497), must be a willful misapplication for the use or benefit of accused, or of some person or company other than the banking association, with intent to injure and defraud the association, or some other body corporate or natural person, being entirely different from acts constituting an official maladministration, subjecting the bank to a forfeiture of its charter, as provided by section 5239 (page 3515).
—United States v. Steinman, 172 Fed. 913.....97 C. C. A. 271

An unintentional overdraft by a depositor in good standing and possessing ample means to pay, or an overdraft to be paid pursuant to a prior agreement resting on abundant credit, does not constitute a willful misapplication of a national bank's funds, in violation of Rev. St. § 5209 (U. S. Comp. St. 1901, p. 3497).
—United States v. Steinman, 172 Fed. 913.....97 C. C. A. 271

In a prosecution for aiding and abetting the officers of a national bank to willfully abstract the funds of the bank by means of certain overdrafts, evidence that prior to the making of such overdrafts it was agreed that the bank should furnish funds for the operations of certain corporations in which accused and the bank's president and cashier were officers, and that from time to time notes should be given by such corporations to take up the overdrafts, and that at the time of the advances the value of the corporation's property was more than $300,000, while the overdrafts aggregated only $30,872.24, was admissible to show absence of criminal intent.
—United States v. Steinman, 172 Fed. 913.....97 C. C. A. 271

In a prosecution for aiding and abetting the willful misapplication of the funds of a national bank by its officers by overdrafts, an instruction that an arrangement by which the cashier and president of a banking institution allows its funds to be taken out is not a justification, since the funds of a national banking institution can only be taken out by the action of its board of directors, and that if by the paying of the checks constituting the overdrafts, or any of them, either the money of the bank was removed from its resources, or its capital reduced, or its charter endangered, any one of such things would be sufficient to warrant the jury in finding a misapplication with intent to injure the bank, was erroneous.
—United States v. Steinman, 172 Fed. 913.....97 C. C. A. 271

BILL OF LADING.

See Carriers, § 2; Shipping, § 3.

BILLS AND NOTES.

Payment by note, see Payment, § 1.

BONDS.

Issuance by city, see Municipal Corporations, § 1.
Jurisdiction of United States court to restrain issuance of municipal bonds as dependent on amount in controversy, see Courts, § 2.

BRAIDS.

Custom duties on, see Customs Duties, § 1.

BREACH.

Of contract, see Sales, § 8.

CANALS.

See Waters and Water Courses, §§ 3, 4.

CANCELLATION OF INSTRUMENTS.

Rescission of contracts for sale of goods, see Sales, § 2.

CARGO.

See Shipping.

CARRIERS.

Carriage of goods by vessels, see Shipping, § 3.

§ 1. Control and regulation of common carriers.

In Interstate Commerce Act Feb. 4, 1887, c. 104, § 2, 24 Stat. 379 (U. S. Comp. St. 1901, p. 3155), which prohibits discrimination between shippers under "substantially similar circumstances and conditions," such phrase relates to the circumstances and conditions of carriage only, and does not include matters affecting individual shippers; and a railroad company is not authorized to charge one shipper of coal a lower rate than is charged another shipper between the same terminals, because the former is shipping under contracts extending over a term of years, based on lower rates which were in force when such contracts were made, while the other shipper has no such contracts.

—Pennsylvania R. Co. v. International Coal Mining Co., 173 Fed. 1... 97 C. C. A. 383

Where a railroad company operating an interstate road treated points on a connecting road which it also operated as within a certain coal district, from all points in which, whether on such line or its own line, it made and published the same rates, such road for freight purposes was a part of its line, and its relations with the owner thereof are immaterial.

—Pennsylvania R. Co. v. International Coal Mining Co., 173 Fed. 1... 97 C. C. A. 383

In an action by a coal mining company against a railroad company under Interstate Commerce Act Feb. 4, 1887, c. 104, § 8, 24 Stat. 382 (U. S. Comp. St. 1901, p. 3159), to recover damages because of discrimination in rates made in favor of other shippers between the same terminals, the measure of damages recoverable is the difference between the amount paid by plaintiff and the amount it would have paid at the lowest rate charged on any other shipments carried under substantially the same circumstances and conditions during the same time, and not the difference between the rates paid by it and the average rate paid by any other shipper.

—Pennsylvania R. Co. v. International Coal Mining Co., 173 Fed. 1... 97 C. C. A. 383

To entitle a shipper to maintain an action against a railroad company under Interstate Commerce Act Feb. 4, 1887, c. 104, § 8, 24 Stat. 382 (U. S. Comp. St. 1901, p. 3159), to recover damages for being unjustly discriminated against in rates, it is not necessary that he should have paid the freight charged under protest.

—Pennsylvania R. Co. v. International Coal Mining Co., 173 Fed. 1... 97 C. C. A. 384

A coal shipper, which, with others, was given rebates by a railroad company in violation of law, cannot maintain an action against the com-

pany to recover damages for discrimination because others were granted larger rebates.
—Pennsylvania R. Co. v. International Coal Mining Co., 173 Fed. 1... 97 C. C. A. 384

§ 2. **Carriage of goods.**
The Hepburn act (Act June 29, 1906, c. 3591, § 7, 34 Stat. 595 [U. S. Comp. St. Supp. 1907, p. 909]), relating to the liability of common carriers of property in interstate commerce for loss or damage to such property, but which contains the proviso "that nothing in this section shall deprive any holder of such receipt or bill of lading of any remedy or right of action which he has under existing law," leaves a shipper free to resort to the laws of a state applicable to his contract.
—Latta v. Chicago, St. P., M. & O. Ry. Co., 172 Fed. 850..... 97 C. C. A. 198

§ 3. **Carriage of live stock.**
Const. Neb. art. 11, § 4, which provides that "the liability of railroad corporations as common carriers shall never be limited," applies to contracts involving interstate commerce, and under such provision, as construed by the Supreme Court of the state, contracts made in Nebraska for the shipment of horses to another state, in which, in order to obtain the rate of freight named in the tariff schedules of the company, based on such valuation, the shipper is obliged to agree that the liability of the company shall, in case of loss, be limited to $100 per head, regardless of actual value, are void as to such attempted limitation, and the shipper may recover the actual value.
—Latta v. Chicago, St. P., M. & O. Ry. Co., 172 Fed. 850..... 97 C. C. A. 198

§ 4. **Carriage of passengers.**
Under the provisions of Gen. St. Kan. 1901, §§ 5857, 5858, making railroad companies liable for all damages to persons or property caused by their negligence, and for injuries to employés through their negligence or that of other employés, which, as construed by the Supreme Court of the state, render void any contract limiting such liability, a contract between an express company and a railroad company that the former shall indemnify and save the latter harmless against any liability on account of the injury or death of any employé of the express company while in the cars or about the platforms of the railroad company, whether resulting from its negligence or otherwise, and a second contract between the express company and an employé by which the employé assumes all risks of accidents or injuries while riding on the cars of any railroad, and expressly ratifies the contract between the express company and railroad company, and agrees to save the express company harmless from any liability thereon, wherever such contracts were made, are not available as a defense to an action against the railroad company by the widow of the employé to recover damages for his death, occurring in Kansas through the alleged negligence of the railroad company.
—Weir v. Rountree, 173 Fed. 776.....97 C. C. A. 500

CHANCERY.

See Equity.

CHARGE.

To jury in civil actions, see Trial, § 2.
To jury in criminal prosecutions, see Criminal Law, § 2.

CHARTER PARTIES.

See Shipping, § 2.

CHATTEL MORTGAGES.

§ 1. Requisites and validity.
A chattel mortgage on property described only as "five wagons," when the mortgagor owned more than five wagons, is void for insufficiency of description.
—In re Bothe, 173 Fed. 597.....97 C. C. A. 547

§ 2. Rights and remedies of creditors.
Under Rev. St. Mo. 1899, § 3404 (Ann. St. 1906, p. 1936), which provides that a chattel mortgage shall be void against any other person than the parties thereto unless possession of the property is taken by the mortgagee or the mortgage is recorded, as construed by the appellate courts of the state, creditors of a mortgagor who became such after the mortgage was given, but before it was recorded, have equities superior to those of the mortgagee, and the mortgage remains void as to them, although subsequently recorded, and although they have acquired no title to or lien upon the property.
—In re Bothe, 173 Fed. 597.....97 C. C. A. 547

CHEAT.

See Fraud.

CHINESE.

Exclusion or expulsion, see Aliens, § 1.

CIRCUIT COURTS OF APPEALS.

See Courts, § 2.

CITIES.

See Municipal Corporations.

CITIZENS.

See Aliens; Indians.
Citizenship ground of jurisdiction of United States courts, see Courts, § 2.
Equal protection of laws, see Constitutional Law, § 2.

CIVIL RIGHTS.

See Constitutional Law, § 2.

CLAIMS.

Mining claims, see Mines and Minerals, § 1.

COAL.

Discrimination between shippers of, see Carriers, § 1.

COLLATERAL ATTACK.

On adjudication in bankruptcy, see Bankruptcy, § 2.

COLLATERAL UNDERTAKING.

See Guaranty.

COLLECTION.

Of taxes, see Taxation, § 3.

COLLISION.

§ 1. **Steam vessels and sail vessels.**

The rule of evidence applied, in cases of collision between sailing vessels, where the evidence is conflicting, that it is more probable that one vessel fell off from her course than that the other changed her course many points, applies with less force to a collision between a sailing vessel and a steamer.

—The Edda, 173 Fed. 436.....97 C. C. A. 638

A decree of the trial court affirmed which found that a collision in Vineyard Sound, on a clear evening, between a schooner and a steamer meeting, was due solely to the fault of the schooner in deviating from her course to one across that of the steamer.

—The Edda, 173 Fed. 436.....97 C. C. A. 638

§ 2. **Vessels in tow.**

A derrick, lawfully anchored about the middle of the East river while engaged in raising a sunken vessel, *held* entitled to recover damages from a tug whose tow came into collision with her, on the ground that it was the duty of the tug to use ordinary care and skill to avoid the derrick and that under the evidence she failed to do so.

—The James McWilliams, 172 Fed. 919.....97 C. C. A. 277

§ 3. **Narrow channels, harbors, rivers, and canals.**

A collision between a tug coming out from a basin and a carfloat on the side of another tug, which had just passed out, *held* due to the fault of the latter in backing her tow across the narrow entrance in maneuvering to get her direction, without taking any precaution to notify vessels which might be coming out.

—The William Tracy, 172 Fed. 922.....97 C. C. A. 280

COLOR OF TITLE.

To sustain adverse possession, see Adverse Possession.

COMBINATIONS.

See Monopolies, § 1.

COMITY.

Between courts, see Courts, § 3.

COMMERCE.

Carriage of goods and passengers, see Carriers; Shipping.

§ 1. **Power to regulate in general.**

Laws Neb. 1907, p. 191, c. 48, § 1, which provides, inter alia, that railroad companies operating trains within the state shall be liable for in-

juries to employés resulting from the negligence of other employés, is comprehensive in its terms, and applies to railroads doing an interstate business, and governs the liability of such companies to employés operating trains engaged in interstate commerce in the absence of valid legislation by Congress covering such liability.
—Missouri Pac. Ry. Co. v. Castle, 172 Fed. 841.....97 C. C. A. 124

The liability of a railroad company for an injury resulting from its negligence, in the absence of any controlling federal statute relating to interstate commerce, is governed by the law of the state where the injury occurred, whether statutory or the common law as construed by its courts.
—Weir v. Rountree, 173 Fed. 776.....97 C. C. A. 500

COMMISSION.

To take testimony, see Depositions.

COMMON CARRIERS.

See Carriers.

COMPENSATION.

Salvage, see Salvage, §§ 1, 2.

COMPETENCY.

Of experts as witnesses, see Evidence, § 3.
Of witnesses in general, see Witnesses, § 1.

COMPETITION.

Unfair competition, see Trade-Marks and Trade-Names, § 2.

COMPLAINT.

In criminal prosecutions, see Indictment and Information.

COMPROMISE AND SETTLEMENT.

See Payment.

CONCLUSION.

Of witness, see Evidence, § 3.

CONCURRENT JURISDICTION.

Of courts, see Courts, § 3.

CONDITIONS.

Precedent to rescission of sale, see Sales, § 2.

CONFIDENTIAL RELATIONS.

Disclosure of communications, see Witnesses, § 1.

CONFLICT OF LAWS.

As to construction of railroad, see Contracts, § 1.
As to dower right, see Dower, § 1.
As to liability of carriers, see Carriers, § 2.
Conflicting jurisdiction of courts, see Courts, § 3.

CONSPIRACY.

Combinations to monopolize trade, see Monopolies, § 1.
Evidence of acts and declarations of conspirators, see Criminal Law, § 1.

CONSTITUTIONAL LAW.

Provisions relating to particular subjects.

See Bankruptcy, § 1; Commerce, § 1.
Necessity of indictment or presentment in criminal prosecution, see Indictment and Information, § 1.

§ 1. Obligation of contracts.
The construction and maintenance by a telephone company of its lines in the streets of a city under authority conferred by a state statute is an acceptance by it of the provisions of such statute, and creates a contract between it and the state, which is protected from impairment by the federal Constitution.
—Sunset Telephone & Telegraph Co. v. City of Pomona, 172 Fed. 829 97 C. C. A. 251

§ 2. Equal protection of laws.
Laws Neb. 1907, p. 192, c. 48, § 2, which provides for the application of the rule of comparative negligence in actions by employés against railroad companies for personal injuries is within the constitutional power of the Legislature, and does not deprive the defendant in such cases of the equal protection of the laws.
—Missouri Pac. Ry. Co. v. Castle, 172 Fed. 841.....97 C. C. A. 124

Laws Neb. 1907, p. 192, c. 48, § 2, which provides that "all questions of negligence and contributory negligence shall be for the jury" in actions by employés against railroad companies for personal injuries, is within the constitutional power of the Legislature, and does not deprive the defendant in such cases of the equal protection of the laws.
—Missouri Pac. Ry. Co. v. Castle, 172 Fed. 841.....97 C. C. A. 124

CONSTRUCTION.

Of contracts, instruments, or judicial acts or proceedings.

See Indemnity; Patents, § 4; Statutes, § 1; Stipulations.
Contract of sale, see Sales, § 1.
Contracts in general, see Contracts, § 2.

CONTEMPT.

Violation of injunction, see Injunction, § 3.

CONTRACTS.

Agreements within statute of frauds, see Frauds, Statute of, § 1.
Estoppel by contract, see Estoppel, § 1.
Impairing obligation, see Constitutional Law, § 1.
Jurisdiction of United States court to restrain execution of contract as dependent on amount in controversy, see Courts, § 2.
Parol or extrinsic evidence, see Evidence, § 2.
Specific performance, see Specific Performance.
Subrogation to rights or remedies of creditors, see Subrogation.

Contracts of particular classes of persons.

See Carriers, § 2; Master and Servant.

Contracts relating to particular subjects.

See Mines and Minerals, § 2; Waters and Water Courses, § 2.
Limitation of liability of carrier, see Carriers, §§ 3, 4.
Transportation of goods, see Carriers, § 2.

Particular classes of express contracts.

See Guaranty; Indemnity; Insurance; Sales.
Affreightment, see Shipping, § 3.
Bills of lading, see Carriers, § 2.
Charter parties, see Shipping, § 2.
Employment, see Master and Servant.
Sales of realty, see Vendor and Purchaser.
Stipulations in actions, see Stipulations.

Particular modes of discharging contracts.

See Payment.

§ 1. Requisites and validity.

Bates' Rev. St. Ohio, § 3207, which requires a railroad company, contracting for construction work, to stipulate in its contract that it will pay out the contract price to the persons and in the order named therein, conceding its validity, can have no application to a contract made in another state for work to be done in such state.

—George A. Shaw & Co. v. Cleveland, C., C. & St. L. Ry. Co., 173 Fed. 746.....97 C. C. A. 520

§ 2. Construction and operation.

Although time is made an essential element of a contract by express stipulation, the party who is entitled to insist on a punctual performance by the other, or else that the agreement be ended, may waive his right and the benefit of any objection he might raise to a performance after the prescribed term, either expressly or by his conduct, and his conduct will operate as a waiver when it is consistent only with a purpose on his part to regard the contract as still subsisting after the other party's default.

—Mound Mines Co. v. Hawthorne, 173 Fed. 882.....97 C. C. A. 394

A street railway company leased its entire system and property for a long term. A contract was subsequently made between them by which the lessee agreed to furnish to the lessor $8,000,000 in cash to make certain extensions and pay indebtedness, and the lessor agreed to issue its improvement notes for the same amount to defendant, a security company, with collateral security. By a contemporaneous agreement between the lessee and defendant the latter agreed that it would when required, on reasonable notice, and in any event before January 1, 1909, furnish to the lessee such sums as might be required by it to carry out its agreement with the lessor. A third agreement was made between defendant and a fourth corporation by which defendant was to deliver the notes and

security received from the lessor to the other party, which was to supply the $8,000,000, to be raised by a sale of its own obligations, secured by collateral deposited with a trust company, in accordance with a fourth contract between them. The several contracts were fully performed, except that defendant paid over to the lessee only a part of the money, refusing on the lessee's insolvency to pay more. The several corporations, except the trust company, were practically controlled by the same persons, the fourth corporation, which in fact furnished the money owning 96 per cent. of the stock of defendant, and defendant the entire stock of the lessee. *Held*, that all the contracts must be construed together as one, and, so construed, the transaction was not a loan by defendant, but it simply acted as a conduit for the transfer of the securities and payment of the money to the lessee, and that, having received it for the purpose, and the contracts having been fully executed by all other parties, it had no concern with the solvency or insolvency of the lessee, whose receivers were entitled to recover the unpaid part of the money.
—Metropolitan Securities Co. v. Ladd, 173 Fed. 269..97 C. C. A. 435

The intention of the parties, when manifest, or when ascertained from the written agreement, must control and be enforced, without regard to inapt expressions or the dry words of the contract, unless that intention is directly contrary to the plain sense of the binding words of the agreement.
—A. Leschen & Sons Rope Co. v. Mayflower Gold Mining & Reduction Co., 173 Fed. 855.....97 C. C. A. 465

The court, so far as possible, should put itself in the place of the parties to the contract when their minds met upon the terms of the agreement, and then from a consideration of the writing itself, of its purpose, and of the circumstances which conditioned its making, endeavor to ascertain what they intended to agree to do, upon what sense and meaning of the terms they used their minds actually met.
—A. Leschen & Sons Rope Co. v. Mayflower Gold Mining & Reduction Co., 173 Fed. 855.....97 C. C. A. 465

Where the language of the agreement is contradictory, obscure, or ambiguous, or where its meaning is doubtful, so that the contract is fairly susceptible of two constructions, one of which makes it fair, customary, and such as prudent men would naturally execute, while the other makes it inequitable, unusual, or such as reasonable men would not be likely to enter into, the interpretation which makes it a rational and probable agreement must be preferred to that which makes it an unusual, unfair, or improbable contract.
—A. Leschen & Sons Rope Co. v. Mayflower Gold Mining & Reduction Co., 173 Fed. 855.....97 C. C. A. 465

A provision of a contract for railroad construction, giving the railroad company the right to apply any money due or to become due under the contract to the payment of liens for labor or materials furnished to the contractor, is wholly for the company's benefit, and does not impose any contract obligation upon it to pay such liens.
—George A. Shaw & Co. v. Cleveland, C., C. & St. L. Ry. Co., 173 Fed. 746 .....97 C. C. A. 520

CONTRADICTION.

Of witnesses, see Witnesses, § 2.

CONTRIBUTORY NEGLIGENCE.

See Negligence, § 1.
Of person injured by operation of railroad, see Railroads, § 1.
Of servant, see Master and Servant, § 1.

CONVEYANCES.

See Chattel Mortgages.
Of water rights, see Waters and Water Courses, § 2.

CORPORATIONS.

Combination between corporation and its agents in violation of anti-trust act, see Monopolies, § 1.
Subject to bankruptcy act, see Bankruptcy, § 2.
Taxation of corporations and corporate property, see Taxation, § 2.

Particular classes of corporations.

See Municipal Corporations; Railroads; Street Railroads.
Banks, see Banks and Banking.
Telegraph and telephone companies, see Telegraphs and Telephones.
Water companies, see Waters and Water Courses, § 4.

§ 1. Incorporation and organization.

G., who was the owner of certain patent rights, agreed that plaintiff should receive 25 per cent. of the actual stock of any company which should be organized to exploit or purchase the patents. Defendant company was thereafter organized, partly through plaintiff's endeavors, and purchased the patent right from G. *Held*, that defendant's acceptance of the benefit of whatever value was contributed by plaintiff's services did not constitute such a ratification of the understanding between plaintiff and G. as would warrant a submission of the question of defendant's liability to plaintiff thereon to the jury.

—Dickinson v. Matheson Motor Car Co., 171 Fed. 646..97 C. C. A. 29

§ 2. Members and stockholders.

A violation of a law by a corporation does not render its nonparticipating stockholders criminally liable therefor.

—Union Pacific Coal Co. v. United States, 173 Fed. 737..... 97 C. C. A. 578

§ 3. Corporate powers and liabilities.

The obligation of an ultra vires contract is void, whether executed or executory.

—Metropolitan Trust Co. of New York v. McKinnon, 172 Fed. 846... 97 C. C. A. 194

Under Rev. St. Colo. 1908, § 865, which provides that each stockholder of a corporation shall have the right to nominate directors to be voted for, and to vote the number of shares held by him for as many directors as are to be chosen, or to cumulate the same upon one or more candidates, and that directors shall not be elected in any other way, the right to elect directors is a right of the stockholders as such, as distinguished from the corporation, and the validity of a contract made by the corporation, giving another corporation the right to select a certain number of its directors, should not be determined in a suit to which the stockholders are not parties, otherwise than as represented by the corporation.

—Arkansas Valley Sugar Beet & Irrigated Land Co. v. Ft. Lyon Canal Co., 173 Fed. 601.....97 C. C. A. 551

§ 4. Foreign corporations.

A corporation organized under the laws of Delaware by residents of Pennsylvania for the purpose of owning the stock of and financing certain Pennsylvania corporations having the same officers and substantially the same stockholders and which in fact did nothing else, but maintained its office, held its directors' meetings, registered its bonds, and made the loans to the other corporations in Pennsylvania, was doing business

in that state within the meaning of Act Pa. April 22, 1874 (P. L. 108), and its failure to file its statement and otherwise comply with the requirements of that act rendered its contracts made within the state void and unenforceable.
—Colonial Trust Co. v. Montello Brick Works, 172 Fed. 310..... 97 C. C. A. 144

CORROBORATION.

Of witness in general, see Witnesses, § 2.

COSTS.

In action for infringement of patent, see Patents, § 5.

COUNTERFEITING.

Declarations of co-conspirator as evidence, see Criminal Law, § 1.
Demonstrative evidence, see Criminal Law, § 1.

An indictment charging accused with unlawfully, etc., making and forging a large number, to wit, 110 coins, in resemblance and similitude of the true and genuine coin theretofore coined at the mint of the United States, called a "dollar," contrary to the form of the statute, etc., was not objectionable for failure to charge the kind of dollar alleged to have been counterfeited, whether silver or gold.
—Hauger v. United States, 173 Fed. 54.....97 C. C. A. 372

COUNTIES.

See Municipal Corporations.

COURTS.

Review of decisions, see Appeal and Error.

Jurisdiction of particular actions or proceedings.

See Bankruptcy, § 2.
To enforce maritime lien, see Maritime Liens, § 2.
To restrain diversion of water, see Waters and Water Courses, § 3.

§ 1. Establishment, organization, and procedure in general.
While it is desirable that there should be uniformity of decision upon the same question, there rests upon the court the duty of determining by its own investigation the matter at issue; and, though it may have been decided in one way by a court of similar authority in another jurisdiction, such decision is not of binding force, though possessing certain persuasive value, determined by the strength and logic of its statement.
—F. B. Vandegrift & Co. v. United States, 173 Fed. 609..... 97 C. C. A. 469

§ 2. United States courts.
Under the rule of the federal courts, an offer to prove certain facts may be made without first propounding a question to a witness as a basis for such offer, and, if the offer is rejected, error may be assigned thereon where there is nothing to indicate that the offer was not made in good faith, or that the proof would not have been produced if permitted.
—Missouri Pac. Ry. Co. v. Castle, 172 Fed. 841.....97 C. C. A. 124

Rev. St. § 723 (U. S. Comp. St. 1901, p. 583), providing that suits in equity shall not be sustained in either of the courts of the United States

in any case where a plain, adequate, and complete remedy may be had at law, is merely declaratory, and does not narrow the jurisdiction of courts of equity, nor prevent the granting of legal relief therein where jurisdiction has been acquired to grant equitable relief, and the legal remedy is not as practical and efficient.

—The Salton Sea Cases, 172 Fed. 792; California Development Co. v. New Liverpool Salt Co., Id. ..... 97 C. C. A. 214

A bill may be maintained in the federal Circuit Court to restrain the infringement of a common-law trade-mark where other jurisdictional facts are present.

—Capewell Horse Nail Co. v. Mooney, 172 Fed. 826..97 C. C. A. 248

In determining whether a complainant has acquired contract rights under a state statute, which are protected from impairment by the federal Constitution, a federal court will follow the construction placed upon such statute by the highest court of the state, where it is in favor of the contract relied on.

—Sunset Telephone & Telegraph Co. v. City of Pomona, 172 Fed. 829 97 C. C. A. 251

The Supreme Court of California, in construing section 591 of the Penal Code, which makes it a penal offense for any person to maliciously take down or injure any line of telegraph, held that the word "telegraph," as used in such section, included in its meaning "telephone." Pol. Code Cal. § 4480, provides that with relation to each other the provisions of the four Codes are to be construed as though parts of the same statute. *Held* that, under such rule and decision, Civ. Code Cal. § 536, which provides that "telegraph corporations may construct lines of telegraph along and upon any public road or highway * * * within this state," must be construed by a federal court as including telephone corporations, and as authorizing them to construct and maintain their lines in the streets of cities and towns without first procuring the consent of the municipal authorities.

—Sunset Telephone & Telegraph Co. v. City of Pomona, 172 Fed. 829 97 C. C. A. 251

A federal court will not adjudge a state statute invalid, as in violation of the state Constitution, where its validity has been expressly recognized by the highest court of the state.

—Sunset Telephone & Telegraph Co. v. City of Pomona, 172 Fed. 829 97 C. C. A. 251

Where the primary purpose of a bill was to enjoin the execution of a contract for the construction of a city water system and to restrain the issuance and delivery of city bonds to the extent of $600,000 on the ground that the issue of the bonds was void, and the bill alleged that if the bonds were issued complainant would be required to pay in taxes a sum exceeding $10,000, such amount represented the amount in controversy for the purpose of determining federal jurisdiction, and not the amount of the first annual assessment on complainant's property to pay interest and provide a sinking fund for the payment of the bonds.

—City of Helena v. Helena Waterworks Co., 173 Fed. 18..... 97 C. C. A. 320

An order of a Circuit Court of the United States declaring a judgment in a criminal action abated by reason of the death of the defendant after the entry of the judgment is in an independent proceeding of a civil nature, and reviewable on writ of error by the Circuit Court of Appeals at the instance of the United States.

—United States v. Dunne, 173 Fed. 254.....97 C. C. A. 420

The construction of a state Constitution or statute by the highest court of the state is binding upon the federal courts in cases involving rights which arose after such construction was given.

—George A. Shaw & Co. v. Cleveland, C., C. & St. L. Ry. Co., 173 Fed. 746 .....97 C. C. A. 520

Bates' Rev. St. Ohio, § 3231—1, which gives an absolute lien upon the property of a railroad company for supplies or materials furnished for the construction of its road to any contractor or subcontractor, is unconstitutional and void, as an abridgment of the liberty of contract secured by the Bill of Rights of the state Constitution, under the construction placed on such constitutional provision by the Supreme Court of the state.
—George A. Shaw & Co. v. Cleveland, C., C. & St. L. Ry. Co., 173 Fed. 746 .....97 C. C. A. 520

Where facts have been found by the Circuit Court of Appeals and stated to the Supreme Court as a basis for asking its instructions, the court will not, after such instructions have been obtained, re-examine upon the identical evidence already considered controverted questions of fact which have been advisedly determined.
—The Folmina, 173 Fed. 615.....97 C. C. A. 557

If a cross-bill in a federal court assumes the character of an original bill, it will be dismissed for want of jurisdiction, where the parties to the controversy presented thereby are citizens of the same state.
—Patton v. Marshall, 173 Fed. 350.....97 C. C. A. 610

§ 3. Concurrent and conflicting jurisdiction, and comity.
Under Rev. St. § 720 (U. S. Comp. St. 1901, p. 581), which provides that a writ of injunction shall not be granted by a federal court to stay proceedings in any court of a state, a federal court has no power to enjoin the further prosecution of an action at law in a state court between citizens of the same state to permit one of the parties to litigate the same question before it by making the other party a defendant in a suit in equity pending therein.
—Patton v. Marshall, 173 Fed. 350.....97 C. C. A. 610

CREDIBILITY.

Of witness, see Witnesses, § 2.

CREDITORS.

See Bankruptcy.
Rights as to chattel mortgage by debtor, see Chattel Mortgages, § 2.
Subrogation to rights of creditor, see Subrogation.

CRIMINAL LAW.

Arrest of accused, see Arrest, § 1.
Fines, see Fines.
Indictment, information, or complaint, see Indictment and Information.
Nonliability of nonparticipating stockholders for acts of corporation, see Corporations, § 2.

Offenses by particular classes of persons.

Bank officers, see Banks and Banking, § 2.

Particular offenses.

See Counterfeiting.
Against anti-trust law, see Monopolies, § 1.
Against bankruptcy act, see Bankruptcy, § 4.
Against postal laws, see Post Office, § 1.

§ 1. Evidence.
Declarations of an alleged co-conspirator to a witness are inadmissible to prove the existence of the conspiracy as against another party thereto.
—Hauger v. United States, 173 Fed. 54.....97 C. C. A. 372

In a prosecution of defendant for counterfeiting, the confession of an alleged co-conspirator while in jail to his keeper, implicating accused in a scheme to manufacture and pass counterfeit money, was inadmissible as res gestæ prior to or in the absence of competent testimony to establish the conspiracy.

—Hauger v. United States, 173 Fed. 54.....97 C. C. A. 372

Declarations and confessions of an alleged co-conspirator after the offense had been committed and the parties had been arrested were inadmissible against accused.

—Hauger v. United States, 173 Fed. 54.....97 C. C. A. 372

In criminal cases, alleged admissions by accused from his failure to deny incriminating statements made in his presence are subject to the same rules as applied to confessions.

—Hauger v. United States, 173 Fed. 54.....97 C. C. A. 372

Where only portions of the confession of an alleged co-conspirator had been repeated to defendant, his failure to deny the same did not justify the admission of the entire confession of such co-conspirator.

—Hauger v. United States, 173 Fed. 54.....97 C. C. A. 372

Hearsay evidence is incompetent to establish any specific fact, the nature of which is susceptible of proof by witnesses who speak from their own knowledge.

—Hauger v. United States, 173 Fed. 54.....97 C. C. A. 372

Where defendant was under arrest and in charge of an officer in one room of his house, while another officer with defendant's wife searched the adjoining room, incriminating statements made by the wife were inadmissible against accused on the theory that he could have heard and did not deny them, since even if he heard, being under arrest, he might have felt that he was not at liberty to speak.

—Hauger v. United States, 173 Fed. 54.....97 C. C. A. 372

In a prosecution for counterfeiting, counterfeit coin alleged to have been obtained by the witness from a police officer in Pittsburg, whose name he could not remember, and who said he obtained the same from M., whom the government claimed was an accomplice, and others obtained from various persons in the same place, whose names the witness could not remember, also claiming to have obtained them from M. before his arrest, was inadmissible against the defendant; there being no proof to connect him with them.

—Hauger v. United States, 173 Fed. 54.....97 C. C. A. 372

§ 2. Trial.

While it is the right of the judge of a federal court, in a criminal as well as a civil case, to comment on the facts in his charge to the jury, his comments should be judicial and dispassionate, and so carefully guarded that the jurors, who are the triers of them, may be left free to exercise their independent judgment.

—Rudd v. United States, 173 Fed. 912.....97 C. C. A. 462

Where the language of a court in commenting on the defense relied on in a criminal case in its charge to the jury was so positive and emphatic and of such a character that the jury may have believed that a finding for the defendant would subject them to ridicule, a mere withdrawal of such language, and a direction to the jury that the question is for them, may be of doubtful sufficiency to correct such impression, and in such case the just remedy is a new trial.

—Rudd v. United States, 173 Fed. 912.....97 C. C. A. 462

Unless there is substantial evidence of facts which exclude every other hypothesis but that of guilt, it is the duty of the trial court to instruct the jury to return a verdict for the accused.

And where all the substantial evidence is as consistent with innocence as with guilt, it is the duty of the appellate court to reverse a judgment of conviction.

—Union Pacific Coal Co. v. United States, 173 Fed. 737.....97 C. C. A. 578

§ 3. Appeal and error, and certiorari.

Where, upon the death of a defendant in a criminal case in a federal court pending proceedings in error in the Supreme Court to review a judgment of conviction, the writ of error was dismissed and the cause was remanded for such further proceedings as "according to right and justice and the laws of the United States ought to be had," on the filing of such mandate the jurisdiction of the trial court reattached, and continued until action was taken pursuant to the mandate, and the court had authority to consider and act upon a motion in abatement.

—United States v. Dunne, 173 Fed. 254.....97 C. C. A. 420

Unless there is substantial evidence of facts which exclude every other hypothesis but that of guilt, it is the duty of the trial court to instruct the jury to return a verdict for the accused.

And where all the substantial evidence is as consistent with innocence as with guilt, it is the duty of the appellate court to reverse a judgment of conviction.

—Union Pacific Coal Co. v. United States, 173 Fed. 737..... 97 C. C. A. 578

CROSS-BILL.

See Equity, § 2.

CURTESY.

See Dower.

CUSTOMS DUTIES.

§ 1. Goods subject to duty, rate, and amount.

Braids used as bindings are specially provided for as "bindings" in Tariff Act July 24, 1897, c. 11, § 1, Schedule I, par. 320, 30 Stat. 179 (U. S. Comp. St. 1901, p. 1661), and, though commercially known as "feather-stitch braids," are therefore removed from the provision for "braids * * * not elsewhere specially provided for," in Schedule J, par. 339, 30 Stat. 181 (U. S. Comp. St. 1901, p. 1662).

—Baruch v. United States, 172 Fed. 342.....97 C. C. A. 40

Ramie sliver is dutiable as cotton sliver by similitude, under Tariff Act July 24, 1897, c. 11, § 1, Schedule I, par. 302, 30 Stat. 175 (U. S. Comp. St. 1901, p. 1655).

—F. B. Vandegrift & Co. v. United States, 173 Fed. 609..... 97 C. C. A. 469

Within the meaning of the similitude clause in Tariff Act July 24, 1897, c. 11, § 7, 30 Stat. 205 (U. S. Comp. St. 1901, p. 1693), ramie sliver resembles cotton sliver (1) in "material," because it is a vegetable fiber; (2) in "quality," because it has reached the same degree of purity, or freedom from objectionable substances; (3) in "texture," because the fibers are in the same form; and (4) in "use," because, like cotton sliver, it is spun into yarn and thread, so as to be manufactured into fabrics.

—F. B. Vandegrift & Co. v. United States, 173 Fed. 609..... 97 C. C. A. 469

DAMAGES.

For discrimination in rates between shippers, see Carriers, § 1.
Recovery in injunction suit, see Injunction, § 2.

DEATH.

Nonretroactive operation of employers' liability act, see Master and Servant, § 1.

§ 1. Actions for causing death.

Ballinger's Ann. Codes & St. § 4829 (Pierce's Code, § 257), gives the right of action for wrongful death of an unemancipated minor to recover loss of

earnings during his minority to the father, or, in case of his death or desertion of his family, to the mother, and not to the minor's personal representative.
—Winfree v. Northern Pac. Ry. Co., 173 Fed. 65.....97 C. C. A. 392

Act Cong. June 11, 1906, c. 3073, § 1, 34 Stat. 232 (U. S. Comp. St. Supp. 1907, p. 891), giving the right of action for the wrongful death of an employé engaged in interstate commerce to decedent's personal representative, limits such right of action to one year from the date of the injury complained of.
—Winfree v. Northern Pac. Ry. Co., 173 Fed. 65.....97 C. C. A. 392

Ballinger's Ann. Codes & St. Wash. § 4828 (Pierce's Code, § 256), which provides that, when the death of a person is caused by the wrongful act or neglect of another, an action for damages may be maintained for the benefit of his widow and children, as construed by the Supreme Court of the state, gives such right of action, although the widow and children are nonresident aliens.
—Saveljich v. Lytle Logging & Mercantile Co., 173 Fed. 277.....
97 C. C. A. 443

DEBTOR AND CREDITOR.

See Bankruptcy.

DECEIT.

See Fraud.

DECLARATIONS.

As evidence in criminal prosecutions, see Criminal Law, § 1.

DEEDS.

Of trust, see Chattel Mortgages, § 1.
Of water rights, see Waters and Water Courses, § 2.
Parol or extrinsic evidence, see Evidence, § 2.

DEFAMATION.

See Libel and Slander.

DEMONSTRATIVE EVIDENCE.

In criminal prosecutions, see Criminal Law, § 1.

DEMURRAGE.

See Shipping, § 4.

DEPOSITIONS.

See Witnesses.

When a deposition has been properly taken, either party may introduce all or any competent or relevant part of it which is not clearly fragmentary and misleading, and the opposing party may put in evidence any other like part of it.
—Central Coal & Coke Co. v. Penny, 173 Fed. 340....97 C. C. A. 600

DESCENT AND DISTRIBUTION.

See Dower.

DESCRIPTION.

Of mortgaged property, see Chattel Mortgages, § 1.

DILIGENCE.

Of party asking relief, see Specific Performance, § 1.

DIRECTING VERDICT.

In civil actions, see Trial, § 1.

DISCHARGE.

From indebtedness, see Bankruptcy, § 4.

DISCRETION OF COURT.

Review in civil actions, see Appeal and Error, § 4.

DISCRIMINATION.

Between shippers, see Carriers, § 1.

DISMISSAL AND NONSUIT.

Dismissal of appeal, see Appeal and Error, § 1.

DIVERSE CITIZENSHIP.

Ground of jurisdiction of United States courts, see Courts, § 2.

DIVERSION.

Of waters, see Waters and Water Courses, § 3.

DOMICILE.

Residence as ground of jurisdiction, see Courts, § 2.

DOWER.

Bankruptcy affecting dower rights of wife, see Bankruptcy, § 3.

§ 1. Nature and requisites.

Under Rev. St. Mo. §§ 2933, 2946 (Ann. St. 1906, pp. 1690, 1698), a wife is entitled to dower in lands acquired by the husband in that state, unless

she has released the same, without regard to whether the parties are residents or nonresidents.
-Thomas v. Woods, 173 Fed. 585.....97 C. C. A. 536

DUTIES.

Customs duties, see Customs Duties.

EJECTMENT.

§ 1. Jurisdiction, parties, process, and incidental proceedings.
Under Gen. St. Kan. 1905, § 4909, providing that, "when in an action for the recovery of real or personal property any person having an interest in the property applies to be made a party, the court may order it done," it is incumbent on one applying to be made a party to an action of ejectment to plead facts showing that he has a direct and immediate interest in the property, which will be affected by the judgment.
—Howe v. Meriwether, 172 Fed. 868.....97 C. C. A. 288

ELECTRICITY.

Appropriation of water for electric power, see Waters and Water Courses, § 1.

EMPLOYER'S LIABILITY ACTS.

See Master and Servant, § 1.

EMPLOYÉS.

See Master and Servant.

ENTRY, WRIT OF.

See Ejectment.

EQUITABLE ESTOPPEL.

See Estoppel, § 1.

EQUITY.

Equitable estoppel, see Estoppel. § 1.
Equity jurisdiction of United States courts, see Courts, § 2.

Particular subjects of equitable jurisdiction and equitable remedies.

See Injunction; Specific Performance.
Enforcement of maritime lien, see Maritime Liens, § 2.
Suits for infringement of patents, see Patents, § 5.

§ 1. Jurisdiction, principles, and maxims.
A court of equity having jurisdiction of the parties may enjoin a continuing injury to real property within its jurisdiction by flooding caused by the improper construction of works maintained by defendant for diverting the water of a river into a canal, although such works are across the boundary within the republic of Mexico.
—The Salton Sea Cases, 172 Fed. 792; California Development Co. v. New Liverpool Salt Co., Id.....97 C. C. A. 214

Complainants cannot join in invoking the jurisdiction of a court of equity, on the ground that it will prevent a multiplicity of suits, because defendant has brought similar actions at law against each of complainants on a separate cause of action, and where complainants separately have no cause of action against defendant, either legal or equitable.
—Mechanics' Ins. Co. of Philadelphia v. C. A. Hoover Distilling Co., 173 Fed. 888.....97 C. C. A. 400

§ 2. Pleading.
New parties cannot be brought into a suit in equity by a cross-bill; but, if the interest of defendant requires their presence, he should take the objection of nonjoinder and compel complainant to amend.
—Patton v. Marshall, 173 Fed. 350.....97 C. C. A. 610

In a suit in equity by the purchaser of coal rights in lands for a specific enforcement of the contract, the terms of which were in dispute between the parties, the defendant cannot by cross-bill bring in as parties defendant the agents who made the contract, on his behalf and with his approval, to have their right to commissions determined, a controversy which has no relevancy to the principal suit, and in which complainant has no interest.
—Patton v. Marshall, 173 Fed. 350.....97 C. C. A. 610

ERROR, WRIT OF.

See Appeal and Error.

ESTABLISHMENT.

Of courts, see Courts, § 1.
Of telegraphs or telephones, see Telegraphs and Telephones.

ESTATES.

See Dower.

ESTOPPEL.

To take appeal, see Appeal and Error, § 1.

§ 1. Equitable estoppel.
Where a pledgee of certain bank stock did not act on the owner's repudiation of the pledge, the owner was not estopped to change its position, and by subsequently tendering the amount of the debt acquire a right to the stock.
—Metropolitan Trust Co. of New York v. McKinnon, 172 Fed. 846.... 97 C. C. A. 194

The doctrine of estoppel in pais, while of equitable origin, is by the modern practice generally applied in actions at law, and facts constituting such an estoppel against a defendant may properly be pleaded in a complaint.
—Kellogg-Mackay-Cameron Co. v. Havre Hotel Co., 173 Fed. 249.... 97 C. C. A. 415

Defendant entered into a contract to sell to plaintiffs the hops raised by him on his farm for the ensuing two years. *Held*, in an action to recover damages for breach of such contract, that defendant was entitled to show as an estoppel that it was agreed when and after the contract was made that it should terminate and not be enforced in case he sold

his farm, and that when he contemplated such sale he was assured by plaintiff of the same thing, and made the sale in reliance on such assurance.
—Lilienthal v. Cartwright, 173 Fed. 580.....97 C. C. A. 530

EVIDENCE.

See Depositions; Witnesses.
Questions of fact for jury, see Trial, § 1.

As to particular facts or issues.

See Payment, § 2.
Fault of vessel in collision, see Collision, §§ 1, 2.

In particular civil actions or proceedings.

See Bankruptcy, § 2; Libel and Slander, § 3.
Admiralty, see Admiralty, § 1.
For discharge of bankrupt, see Bankruptcy, § 4.
For infringement of patent, see Patents, § 5.
For injuries caused by negligence of servant, see Master and Servant, § 2.
For injuries caused by operation of railroad, see Railroads, § 1.
For injuries to servant, see Master and Servant, § 1.
For loss of or injuries to cargo, see Shipping, § 3.
To recover freight on cargo, see Shipping, § 3.

Review and procedure thereon in appellate courts.

Harmless error in rulings on, see Appeal and Error, § 4.
Review of rulings on, as dependent on record on appeal or error, see Appeal and Error, § 3.

§ 1. Admissions.

A report made by a railway company to taxing officers in pursuance of the requirement of a state statute, for the purpose of aiding the officers in properly assessing its property, is competent evidence against it of the facts stated therein, in a suit by it to enjoin the collection of taxes levied upon an assessment based upon the report.

But a report of the company to the Interstate Commerce Commission, covering a period of time other than that on which the statute required the assessment to be based, and not made for taxation, is not competent evidence against it in such a suit.
—Atchison, T. & S. F. Ry. Co. v. Sullivan, 173 Fed. 456.....97 C. C. A. 1

The admissions of agents and attorneys authorized to act in a suit or legal proceeding estop their principals therein; but they are not competent evidence against the latter in another suit or legal proceeding in which different issues are involved.
—Atchison, T. & S. F. Ry. Co. v. Sullivan, 173 Fed. 456.....97 C. C. A. 1

§ 2. Parol or extrinsic evidence affecting writings.

In an action on a written contract, by which defendant, who owned a hop farm, agreed to sell to plaintiff the crop on such farm for the ensuing two years, the defense was that it was orally agreed, both before and after the contract was signed, that it should be void or should terminate in case he should sell his land, and that he did sell it. *Held*, that it was not error to admit evidence of a similar understanding at the time of the making of a contract two years before between the same parties, and that on the sale by defendant of a part of his land the contract was modified accordingly, where the jury were instructed that such evidence was not to be considered on the question whether the contract in suit was modified, but only to aid in determining the condition of the minds of the parties

when it was made, and the probability that the modification claimed would be assented to by plaintiff.
—Lilienthal v. Cartwright, 173 Fed. 580.....97 C. C. A. 530

§ 3. **Opinion evidence.**
The exclusion of a question asked an expert witness because too general is largely within the discretion of the court.
—Carter, Rice & Co. v. Aubin, 172 Fed. 916.....97 C. C. A. 274

The exclusion of a question asked an expert witness on the ground that he was not shown to be qualified is largely within the discretion of the court.
—Carter, Rice & Co. v. Aubin, 172 Fed. 916.....97 C. C. A. 274

In an action by an employé against a mining company to recover for a personal injury caused by the falling of a rock from the roof of an entry, where there were issues as to whether the roof was unsafe, and, if so, whether defendant should have known it in the exercise of reasonable care, it was not error to admit in evidence the opinions of practical miners familiar with the place, to aid the jury on such issues, which were presumably unfamiliar to the ordinary juror.
—Central Coal & Coke Co. v. Williams, 173 Fed. 337.....
97 C. C. A. 597

EXAMINATION.

Of expert witnesses, see Evidence, § 3.

EXCEPTIONS.

Necessity for purpose of review, see Appeal and Error, § 2.

EXEMPTIONS.

Of vessel from liability, see Shipping, § 3.

EXPERT TESTIMONY.

In civil actions, see Evidence, § 3.

FALSE IMPRISONMENT.

§ 1. **Civil liability.**
In an action solely for false imprisonment, the termination of the criminal proceedings is immaterial, and it is not a defense that the plaintiff pleaded guilty to the charge made against him.
—Knickerbocker Steamboat Co. v. Cusack, 172 Fed. 358.....
97 C. C. A. 56

Under the general rule of damages in cases of false imprisonment that the person causing a wrongful imprisonment is liable for all the natural and probable consequences thereof, where the mate of defendant's vessel pointed out the plaintiff, who was a passenger, to an officer, and demanded his arrest, and after the officer had illegally arrested him without a warrant and taken him before a magistrate the mate filed a complaint against him falsely charging him with a criminal offense, plaintiff's imprisonment on such charge may properly be regarded as a continuation of the original wrong, for which defendant was liable in damages.
—Knickerbocker Steamboat Co. v. Cusack, 172 Fed. 358.....
97 C. C. A. 56

FEDERAL COURTS.

See Courts, § 2.

FEDERAL QUESTIONS.

Ground for jurisdiction, see Courts, § 2.

FELLOW SERVANTS.

See Master and Servant, § 1.

FILING.

Indictment or presentment, see Indictment and Information, § 2.

FINES.

A judgment entered against a defendant convicted under Rev. St. § 1782 (U. S. Comp. St. 1901, p. 1212), which provides that any person violating the same shall be deemed guilty of a misdemeanor and shall be imprisoned and fined, is wholly penal, and the death of the defendant after judgment and while the case is pending in an appellate court on writ of error operates to abate the entire cause of action, and the fine is not collectible from the defendant's estate.
—United States v. Dunne, 173 Fed. 254.....97 C. C. A. 420

FIRE INSURANCE.

See Insurance.

FLOWAGE.

See Waters and Water Courses, § 3.

FOREIGN CORPORATIONS.

See Corporations, § 4.

FORGERY.

See Counterfeiting.

FORMS OF ACTION.

See Ejectment.

FRAUD.

Inducing, see Sales, § 1.
Use of mails to defraud, see Post Office, § 1.

§ 1. Deception constituting fraud, and liability therefor.
Defendant, while acting for a trust company to which a corporation was largely indebted, induced plaintiff's attorney to refrain from pressing plaintiff's claim against the corporation then due by attachment or oth-

er process by falsely representing to such attorney that the corporation was in good financial condition, that the trust company would extend the corporation's credit by loaning an additional $25,000, and that, if plaintiff and the trust company and another constituting the corporation's largest creditors would permit the corporation to continue, the corporation would make pro rata payments, and would be able to relieve itself from its difficulties. The trust company at this time, however, was secretly gaining absolute control of the corporation's assets, and recovered for itself a large portion of its indebtedness before plaintiff discovered defendant's duplicity, when the corporation was found to be bankrupt and proceedings in bankruptcy were instituted against it. *Held*, that such facts were insufficient to sustain an action for deceit against defendant. Bradley v. Fuller, 118 Mass. 239, applied.
—Graham v. Peale, Peacock & Kerr of New York, 173 Fed. 9..... 97 C. C. A. 311

FRAUDS, STATUTE OF.

§ 1. **Operation and effect of statute.**
An oral contract, extending an option to purchase certain mining claims, and to waive a forfeiture in consideration of defendant's doing the assessment work on the claims required by law for the year 1907, was not within the statute of frauds, under the rule that, if an agreement required to be in writing under the statute is modified by a subsequent oral agreement, which does not in itself constitute a contract within the statute of frauds, the modification is valid, especially where it merely amounts to an extension of the time of performance of the written contract.
—Stamey v. Hemple, 173 Fed. 61.....97 C. C. A. 379

FRAUDULENT CONVEYANCES.

By bankrupt, see Bankruptcy, § 8.

GOOD FAITH.

Of party asking equitable relief, see Specific Performance, § 1.

GRAND JURY.

See Indictment and Information.

GUARANTY.

See Indemnity.

§ 1. **Remedies of creditors.**
Defendants, who were building a hotel, let a contract for a heating plant for the building to one Brader, who placed an order for the materials needed with plaintiff. Shortly afterward defendants wrote plaintiff, reciting such facts and the terms of payment named in the order, followed by the following statement: "We are prepared to meet these terms with Mr. Brader, so that you will be perfectly safe in shipping him this material." To this plaintiff replied as follows: "Your communication of the 7th instant, guaranteeing the account of P. H. Brader for the material which we are to ship him for the new Hotel Havre, and stating terms of payment on same, received. The same is satisfactory to us." To this letter defendants made no reply. *Held* that, in an action against defendants as guarantors of the account, the complaint properly alleged that defendants intended their letter as an offer to guarantee the account, and

confirmed the same by their failure to reply to plaintiff's letter accepting the same as a guaranty, and that with such allegations the complaint stated a cause of action.
—Kellogg-Mackay-Cameron Co. v. Havre Hotel Co., 173 Fed. 249.... 97 C. C. A. 415

HARMLESS ERROR.

In civil actions, see Appeal and Error, § 4.

HEARSAY.

In criminal prosecutions, see Criminal Law, § 1.

HIGHWAYS.

Accidents at railroad crossings, see Railroads, § 1.

HUSBAND AND WIFE.

See Dower.

IMPAIRING OBLIGATION OF CONTRACT.

See Constitutional Law, § 1.

IMPEACHMENT.

Of witness, see Witnesses, § 2.

IMPORTS.

Duties, see Customs Duties.

IMPRISONMENT.

See Arrest; False Imprisonment.

IMPUTED NEGLIGENCE.

See Negligence, § 1.

INCORPORATION.

See Corporations, § 1.

INDEMNITY.

See Guaranty.

Contracts of indemnity, such as those given by a contractor for work done in public streets, are usually intended to provide against loss or liability of one party through the operations of the other, or caused by physical conditions which are under the control of the other, and over which the indemnified has no control, and are not ordinarily to be con-

strued as covering liability for injuries or accidents the proximate cause of which is the negligence of the party indemnified.
—North American Ry. Const. Co. v. Cincinnati Traction Co., 172 Fed. 214 .....97 C. C. A. 32

A contract for the rehabilitation of the tracks of a street railroad company, the work to be done without interfering with the operation of its cars, provided that the contractor should indemnify the company against all suits brought against it on account of claims for damages done or caused in the course of construction of the work, "or in consequence thereof," including injury to persons, land, or buildings. At a place where the company switched its east-bound cars onto the west-bound track to pass around a long excavation, 14 inches in depth, made by the contractor for replacing the east-bound track, a car was stopped in the night between street crossings, and a passenger alighting on the right-hand side fell into the excavation and received injuries for which she recovered a judgment against the company. *Held*, that the injury was not one received "in consequence" of the contractor's work, but was proximately due to the negligence of the company's employés operating the car, who with knowledge of the excavation permitted the passenger to alight on that side of the car at an unusual place, and that the company could not recover over on its indemnity contract.
—North American Ry. Const. Co. v. Cincinnati Traction Co., 172 Fed. 214 .....97 C. C. A. 32

INDIANS.

Originally the test of the right of individual Indians to share in tribal lands and other tribal property was existing membership in the tribe; but this rule has been so broadened by Act March 3, 1875, c. 131, § 15, 18 Stat. 420 (U. S. Comp. St. 1901, p. 1419), and Act Feb. 8, 1887, c. 119, § 6, 24 Stat. 390, and other acts, as to place individual Indians who have abandoned tribal relations, once existing, and have adopted the customs, habits, and manners of civilized life, upon the same footing in respect of this right as though they had maintained their tribal relations.
—Oakes v. United States, 172 Fed. 305.....97 C. C. A. 139

Act Jan. 14, 1889, c. 24, 25 Stat. 642, relating to the cession of part of the Chippewa reservations in Minnesota and to the allotment in severalty of the remainder, does not expressly or by necessary implication displace the saving provisions of the acts of 1875 and 1887, above named, whereby individual Indians who have abandoned tribal relations, once existing, and have adopted the customs, habits, and manners of civilized life, are accorded the same right to share in tribal property as though they had maintained their tribal relations; nor does it render those provisions less applicable to the Chippewas in Minnesota than to other Indians.
—Oakes v. United States, 172 Fed. 305.....97 C. C. A. 139

Act June 7, 1897, c. 3, 30 Stat. 62, relating to the rights of children of a white man and an Indian woman in tribal property, does not embrace the children of a mother who was living at the time of its passage and was not then recognized by the tribe as one of its members.
—Oakes v. United States, 172 Fed. 305.....97 C. C. A. 139

INDICTMENT AND INFORMATION.

For counterfeiting, see Counterfeiting.

§ 1. Necessity of indictment or presentment.
The fifth constitutional amendment in providing that "no person shall be held to answer for a capital or otherwise infamous crime unless on a presentment or indictment of a grand jury" intends not merely an indict-

ment in form, but a valid indictment found and presented according to the settled usage and established mode of procedure.
—Renigar v. United States, 172 Fed. 646.....97 C. C. A. 172

§ 2. Finding and filing of indictment or presentment.
To constitute a valid indictment for an infamous crime in a federal court, it must have been publicly presented in open court, all the grand jurors being present and answering to their names, the indictment then being delivered by the foreman to the clerk of the court, and the fact entered of record.
—Renigar v. United States, 172 Fed. 646.....97 C. C. A. 172

A paper purporting to be an indictment, indorsed as a true bill by the foreman of a federal grand jury, and delivered by him alone to the clerk of the court in the courtroom when court was not in session, is not an indictment, and confers no jurisdiction on the court to try the accused.
—Renigar v. United States, 172 Fed. 646.....97 C. C. A. 172

§ 3. Requisites and sufficiency of accusation.
The true test of the sufficiency of an indictment is not whether it might possibly have been more certain, but whether it sufficiently apprises defendant of what he must be prepared to meet, and is sufficiently explicit to avail him on a subsequent plea of former conviction or acquittal.
—Hauger v. United States, 173 Fed. 54.....97 C. C. A. 372

§ 4. Waiver of defects and objections, and aider by verdict.
Rev. St. § 1025 (U. S. Comp. St. 1901, p. 720), providing that "no indictment found and presented by a grand jury * * * shall be deemed insufficient * * * by reason of any defect or imperfection in matter of form only," has no application to an indictment not duly found and presented; the defect in such case not being one of form, but of substance.
—Renigar v. United States, 172 Fed. 646.....97 C. C. A. 172

INFORMATION.

Criminal accusation, see Indictment and Information.

INFRINGEMENT.

Jurisdiction of United States courts to restrain infringement of trade-mark, see Courts, § 2.
Of patent, see Patents, § 5.
Of trade-mark, see Trade-Marks and Trade-Names, § 2.

INJUNCTION.

By United States courts against proceedings by state court, see Courts, § 3.
Jurisdiction of equity to restrain injury from flooding caused by waterworks in Mexico, see Equity, § 1.
Jurisdiction of United States courts to restrain infringement of trade-mark, see Courts, § 2.
Jurisdiction of United States courts to restrain issuance of municipal bonds as dependent on amount in controversy, see Courts, § 2.

Relief against particular acts or proceedings.

Collection of tax, see Taxation, § 3.
Infringement of trade-mark, see Trade-Marks and Trade-Names, § 2.
Injuries by flowage, see Waters and Water Courses, § 4.

Issuance of bonds by city, see Municipal Corporations, § 1.
Maintenance of waterworks causing injuries to realty, see Waters and Water Courses, § 3.
Sale of property of bankrupt, see Bankruptcy, § 2.

§ 1. Subjects of protection and relief.

The fact that the several policies of insurance on property destroyed by fire each contained a clause providing that the insurer should not be liable thereunder for a greater proportion of any loss than the amount of such policy bore to the total amount of valid insurance on the property does not give a court of equity jurisdiction of a joint bill by the insurers to enjoin the insured from maintaining actions at law on the policies, and to draw to itself the adjudication of the rights of the parties on the ground that the policies are interdependent contracts and that an accounting is necessary; neither one of complainants having in fact any interest in the amount of recovery from any other.

—Mechanics' Ins. Co. of Philadelphia v. C. A. Hoover Distilling Co., 173 Fed. 888.....97 C. C. A. 400

§ 2. Permanent injunction and other relief.

Where a court of equity has acquired jurisdiction of a suit to enjoin a continuing trespass upon land, it may also, to prevent a multiplicity of suits, award damages for the injury already done, although the same would also be recoverable by an action at law.

—The Salton Sea Cases, 172 Fed. 792; California Development Co. v. New Liverpool Salt Co., Id.....97 C. C. A. 214

§ 3. Violation and punishment.

Defendant by the negligent construction of the works by which it diverted water from the Colorado river into its irrigation canal caused an overflow through a breach in the bank, creating a lake in the Salton Basin, which covered and practically destroyed the value of complainant's property situated in the basin. In a suit by complainant it was awarded damages for the injury, and also an injunction restraining defendant from diverting water from the river in excess of the substantial needs of the people dependent on its canal, from permitting any waste water to flow on or over complainant's land, or into the lake in such amount as would "substantially increase the amount of water therein," or prevent the decrease thereof by natural causes. Defendant's canal was the only source of water supply for an arid valley some 30 miles long and containing 20,000 people, who were wholly dependent thereon for water for domestic purposes and the raising of crops. It appeared that in order to supply their needs, and especially to meet emergencies, as in case of hot winds to which the valley was subject, it was necessary to run through the canal, which was 61 miles long, a quantity of water somewhat in excess of the average consumption, and that the excess, when unused, was discharged through waste gates and flowed into the lake at a point some 40 miles from complainant's land, but not in such quantity as to materially affect its volume. *Held* that, giving the decree a proper and reasonable construction, such waste of water into the lake did not work substantial injury to complainant, and was not a violation of the injunction.

—The Salton Sea Cases, 172 Fed. 820; New Liverpool Salt Co., v. California Development Co., Id.....97 C. C. A. 242

IN PAIS.

Estoppel, see Estoppel, § 1.

INSOLVENCY.

See Bankruptcy.

INSTRUCTIONS.

In civil actions, see Trial, § 2.
In criminal prosecutions, see Criminal Law, § 2.

INSURANCE.

§ 1. Actions on policies.

An open policy of marine insurance issued to a carrier on its cargoes, insuring them "for account of whom it may concern," contained a provision that no actions should be maintained thereon "unless commenced within the time of 12 months next after the disaster causing such loss or damage shall occur." *Held*, that such policy was not one of liability insurance, but that the sinking of a vessel, causing damage to its cargo, was the "disaster" causing the loss, and that the insured had immediately a right of action for the benefit of any party in interest, independently of any antecedent recovery against it by the cargo owner, and that an action was barred in 12 months thereafter.
—Lehigh Valley R. Co. v. Providence Washington Ins. Co., 172 Fed. 364 ..... 97 C. C. A. 62

An averment by insurers that an insured made excessive and fraudulent claims of loss under policies may be tried and determined in actions at law on the policies, and is no ground of equitable jurisdiction.
—Mechanics' Ins. Co. of Philadelphia v. C. A. Hoover Distilling Co., 173 Fed. 888 ..... 97 C. C. A. 400

INTERNATIONAL LAW.

See Aliens; Treaties.

INTERPRETATION.

Of contracts, instruments, or judicial acts and proceedings.

See Indemnity; Patents, § 4; Statutes, § 1; Stipulations.
Contracts in general, see Contracts, § 2.
Contract of sale, see Sales, § 1.

INTERROGATORIES.

To witnesses, see Depositions.

INTERSTATE COMMERCE.

Regulation, see Carriers, § 1; Commerce.

INTERVENTION.

In ejectment, see Ejectment, § 1.

INVENTION.

See Patents.

IRRIGATION.

See Waters and Water Courses, § 4.

JUDGES.

See Courts.

JUDGMENT.

Decisions of courts in general, see Courts, § 1.
Review, see Appeal and Error.

JURISDICTION.

Amount in controversy, see Courts, § 2.

Jurisdiction of particular actions or proceedings.

See Ejectment, § 1.
For causing death, see Death, § 1.
To enforce maritime lien, see Maritime Liens, § 2.
To restrain diversion of water, see Waters and Water Courses, § 3.

Special jurisdictions and jurisdictions of particular classes of courts.

See Bankruptcy, § 2; Equity, § 1.
Particular courts, see Courts.

JURY.

Instructions in civil actions, see Trial, § 2.
Instructions in criminal prosecutions, see Criminal Law, § 2.
Questions for jury in civil actions, see Trial, § 1.
Questions for jury in criminal prosecutions, see Criminal Law, § 2.
Taking case or question from jury at trial, see Trial, § 1.

LANDLORD AND TENANT.

Construction of contracts between lessor and lessee of street railroad, see Contracts, § 2.
Mining leases, see Mines and Minerals, § 2.

LETTERS PATENT.

For inventions, see Patents.

LEX LOCI.

As to construction of railroad, see Contracts, § 1.
As to dower right, see Dower, § 1.
As to liability of carrier, see Carriers, § 2.

LIBEL AND SLANDER.

§ 1. Words and acts actionable, and liability therefor.
In an action for libel, malice may be inferred from the fact that the defamatory communication was false, and known to be so by him who uttered it.
—National Cash Register Co. v. Salling, 173 Fed. 22..97 C. C. A. 334

§ 2. Privileged communications, and malice therein.

The rule that communications by one having an interest to one having an equal interest are privileged, if made in good faith and without malice, does not protect against a communication which is unnecessarily defamatory.

—National Cash Register Co. v. Salling, 173 Fed. 22..97 C. C. A. 334

Where plaintiff had resigned his position, and his resignation had been accepted, and his employment terminated, several days before the writing of the letter which purported to discharge him, a communication to defendant's agent, reciting that plaintiff had been discharged from his employment for cause, that defendant would not again give him a position under any circumstances, and that he was "a dirty dog and a traitor," known by the writer to be false, and intended to prevent plaintiff's success in his endeavor to go into business for himself, was not privileged.

—National Cash Register Co. v. Salling, 173 Fed. 22..97 C. C. A. 334

In the law of libel, the subject may be privileged, while the communication may not.

—National Cash Register Co. v. Salling, 173 Fed. 22..97 C. C. A. 334

A libelous communication is not qualifiedly privileged, unless made in good faith, with the honest belief that it is true.

—National Cash Register Co. v. Salling, 173 Fed. 22..97 C. C. A. 334

§ 3. Actions.

Where there is uncertainty whether the facts which give an alleged libelous communication a privileged character have been established by proof, it is not error to submit such question to the jury.

—National Cash Register Co. v. Salling, 173 Fed. 22..97 C. C. A. 334

Where a communication was false, known by the writer to be so, and was too defamatory to be privileged, an instruction defining "prima facie" to be that the law assumes the communication was false and unprivileged, that the presumptions were disputable, and that defendant was allowed, where the falsity and unprivileged character of the publication was specifically denied, to establish both by proof, was not error.

—National Cash Register Co. v. Salling, 173 Fed. 22..97 C. C. A. 334

The burden of proof of privilege is on the defendant.

—National Cash Register Co. v. Salling, 173 Fed. 22..97 C. C. A. 334

Where defendant wrote a letter concerning plaintiff, falsely stating that he had been discharged for cause, that he was "a dirty dog and a traitor," and one whom defendant would not give a position to under any circumstances, and the writer of the letter, in an action for slander, testified that it was part of his business to look out for people going into business in opposition to defendant, and that he had heard that plaintiff was about to go into business for himself, and wrote the letter "to nip plaintiff's proposition in the bud," such facts were sufficient to prove malice.

—National Cash Register Co. v. Salling, 173 Fed. 22..97 C. C. A. 334

Whether a libelous communication was made in good faith is for the jury.

—National Cash Register Co. v. Salling, 173 Fed. 22..97 C. C. A. 334

LICENSES.

§ 1. For occupations and privileges.

The power given to the District Court in Alaska by Act March 2, 1903, c. 978, 32 Stat. 944, to apportion the license moneys collected from persons for doing business within an incorporated town, and thereby required to be paid over by the clerk of the court to the treasurer of the municipality, and to designate by order the proportion that should be used for school and for municipal purposes, respectively, was taken away by Act April 28, 1904, c. 1778, 33 Stat. 529, which for the first time authorized the common council of incorporated towns to levy a general tax for school pur-

poses, and required it to establish and maintain schools and provide the necessary funds therefor, and which also provided that the license moneys should be paid over to the municipal treasurer without qualification, "to be used for school and municipal purposes," and repealed all inconsistent acts. Since such act the apportionment of such fund rests with the common council of the town.
—Freeding v. Allen, 173 Fed. 263.....97 C. C. A. 429

LIENS.

See Maritime Liens.
Effect of proceedings in bankruptcy, see Bankruptcy, § 3.

LIFE ESTATES.

See Dower.

LIFE INSURANCE.

See Insurance.

LIMITATION OF ACTIONS.

See Adverse Possession.
Action for causing death, see Death, § 1.
Action on insurance policy, see Insurance, § 1.

LIMITATION OF LIABILITY.

Of carrier, see Carriers, §§ 3, 4.
Of vessel, see Shipping, § 3.

LIVE STOCK.

Carriage of, see Carriers, § 3.

LOCATION.

Of mining claim, see Mines and Minerals, § 1.

MACHINERY.

Liability of employer for defects, see Master and Servant, § 1.

MALICE.

Element of libel, see Libel and Slander, §§ 1, 2.

MALICIOUS PROSECUTION.

See False Imprisonment.

MANUFACTURES.

Manufacturing corporation within bankruptcy act, see Bankruptcy, § 2.

MARITIME LIENS.

§ 1. Nature, grounds, and subject-matter in general.

Gen. St. N. J. 1895, p. 1960 (Act March 20, 1857 [P. L. p. 382]; Act March 20, 1878 [P. L. p. 158]; Act April 24, 1884 [P. L. p. 248]), which makes a debt contracted for the building of a vessel a lien thereon, which shall continue a lien until paid, is constitutional and valid, and applies to vessels owned outside of the state, but the unfinished hulls of which were brought therein for completion by equipment with machinery.

—American Trust Co. v. W. & A. Fletcher Co., 173 Fed. 471..... 97 C. C. A. 477

§ 2. Enforcement.

(1) For foreign repairs and supplies for a vessel there arises a lien, apart from statute, enforceable in rem in a court of admiralty, and not so enforceable in the state courts. (2) For domestic repairs and supplies there is no lien, apart from statute, except a possessory lien. (3) For construction there is no lien apart from statute.

—American Trust Co. v. W. & A. Fletcher Co., 173 Fed. 471..... 97 C. C. A. 477

Gen. St. N. J. 1895, p. 1960 (Act March 20, 1857 [P. L. p. 382]; Act March 20, 1878 [P. L. p. 158]; Act April 24, 1884 [P. L. p. 248]), which provides that a debt contracted for the building, repairing, fitting, furnishing, or equipping of a vessel "shall be a lien upon such ship or vessel * * * and continue to be a lien on the same until paid," as construed by the courts of the state, creates a positive lien, enforceable in any court of equity by appropriate proceedings; the procedure prescribed therein not being exclusive.

—American Trust Co. v. W. & A. Fletcher Co., 173 Fed. 471..... 97 C. C. A. 477

A state statute may give a maritime lien for domestic repairs and supplies, enforceable in rem in a court of admiralty, and not so enforceable in the state courts, but a state statute may give a lien, for construction not ordinarily enforceable, in rem or otherwise, in a court of admiralty, but enforceable in the state courts by proceedings which are undistinguishable from proceedings in rem, and also enforceable under certain conditions in federal courts.

—American Trust Co. v. W. & A. Fletcher Co., 173 Fed. 471..... 97 C. C. A. 477

Gen. St. N. J. 1895, p. 1960 (Act March 20, 1857 [P. L. p. 382]; Act March 20, 1878 [P. L. p. 158]; Act April 24, 1884 [P. L. p. 248]), which makes a debt contracted for the building of a vessel a lien thereon, which shall continue a lien until paid, gives the builder a right of property in such vessels, which follows them into another jurisdiction, and is there enforceable according to the rules of the chancery courts, where the statute is not in conflict with the public policy of the state in which it is so sought to enforce it.

—American Trust Co. v. W. & A. Fletcher Co., 173 Fed. 471..... 97 C. C. A. 477

MASTER AND SERVANT.

Exclusion of Chinese laborers, see Aliens, § 1.
Laws applying rule of comparative negligence in actions by servant against railroad as denying equal protection of law, see Constitutional Law, § 2.
Limitations affecting right to sue for wrongful death, see Death, § 1.
Opinion evidence in action for injuries to servant, see Evidence, § 3.
State laws relating to liability for injuries to servants as affecting interstate railroads, see Commerce, § 1.

§ 1. **Master's liability for injuries to servant.**

Plaintiff was employed in the car manufacturing and repairing works of defendant, and was sent by a foreman with another employé to put pin lifters on cars then standing on switch tracks in the yards, and while so at work was injured when the string of cars on which he was working was moved by a switch engine from the opposite end. It appeared that it was customary, when workmen were working on cars on any of such tracks, to put up a signal flag to warn the engineer; but plaintiff had not worked there before, and was not given a flag, nor instructed to use one. *Held*, that he could not be charged with having assumed the risk as matter of law; it being the duty of defendant to see that proper action was taken to make the place safe.

—Womack v. Hicks Locomotive & Car Works, 172 Fed. 217..... 97 C. C. A. 35

A railroad company, which selects a customary method of operation or construction which is neither palpably unreasonable nor clearly dangerous, owes its servants no duty to adopt a different method, and it is not guilty of negligence for a failure to do so.

Its officers have and must exercise discretion and judgment in the selection of such methods, and their decisions of doubtful questions regarding such matters are presumptively right and may not be held to constitute actionable negligence, in the absence of clear proof to that effect.

—Canadian Northern Ry. Co. v. Walker, 172 Fed. 346..97 C. C. A. 44

A railroad company is not liable to its servants for the negligence of shippers in their use and removal of instrumentalities for loading and unloading cars which form temporary obstructions to the safe movement of the cars.

—Canadian Northern Ry. Co. v. Walker, 172 Fed. 346..97 C. C. A. 44

A railroad company is not guilty of negligence because it leaves to shippers who use them the duty of removing from its cars necessary instrumentalities for loading or unloading them which form temporary obstructions near them, and to its servants who move the cars the duty to see that loading or unloading is not in progress just before they start the cars.

—Canadian Northern Ry. Co. v. Walker, 172 Fed. 346..97 C. C. A. 44

A railroad company provided a cattle pen, a platform, and means to form a temporary chute from the pen to the door of the car to enable shippers to load stock into the car. A gate which opened from the pen upon the platform formed, when open, one side of this chute and extended to within four or five inches of the car. The company left the duty of loading and unloading their stock and of closing this gate when they had completed their work to the shippers, and the duty to ascertain, just before the cars were started, whether or not any loading or unloading was in progress to the plaintiff. He could not have discharged that duty without learning that the gate was open. He did not discharge that duty. He knew the method of using the gate, and that if it was open it would strike one riding on the ladder on the side of one of the cars toward the gate; but he did not think of the gate, and when he had failed to make his inspection, and the cars started, he rode along on the side of the ladder of one of them until the open gate knocked him off.

Held, the company was not guilty of any lack of ordinary care to provide the plaintiff with a reasonably safe place in which to discharge the duties of his employment.

—Canadian Northern Ry. Co. v. Walker, 172 Fed. 346..97 C. C. A. 44

Plaintiff, a miner employed by defendant, was coming out of the mine, riding on the front bumpers of a cable car being drawn up a slope, with his arm resting on the top edge of the car, when he was struck by a stream or sheet of water escaping from a defective joint in a pipe used for pumping water from the mine, which was supported along the roof of the tunnel, was thrown around to one side, and his arm was crushed against the roof timbers, which were some six inches above the top of the

car. *Held* that, to render defendant liable for the injury, it was not necessary to show that the force of the water was such as to physically throw plaintiff around and bring his arm in contact with the timbers, but that it was sufficient if it caused him to instinctively throw up his arm.

—Tremont Coal & Coke Co. v. Johnson, 172 Fed. 785..97 C. C. A. 207

In such case the primary act of negligence was that of defendant in maintaining the pipe in its defective condition, which was a breach of its legal duty to furnish plaintiff with a reasonably safe passageway to and from his work, and was the proximate cause of the injury.

—Tremont Coal & Coke Co. v. Johnson, 172 Fed. 785....97 C. C. 207

Where plaintiff, a miner employed by defendant, while coming out of the mine, was struck by a stream of water escaping from a defective joint in a pipe used for pumping water from the mine and was injured thereby, the fact that there had been a small leak in the pipe at the same place for some time was not sufficient to charge plaintiff as a matter of law with assumption of the risk, where it had not before been such as to cause any reasonable apprehension of danger.

—Tremont Coal & Coke Co. v. Johnson, 172 Fed. 785..97 C. C. A. 207

In an action by a servant against the master to recover for an injury resulting from the explosion of a can of wood alcohol, which he had set upon a bench on which was also a lighted lamp, contributory negligence as matter of law in setting the can very close to the lamp was not established by the opinion of an expert that there could have been no explosion if the can had been placed at the distance testified by plaintiff, where such opinion was based on the assumption that the vapor from the can would distribute itself evenly in all directions, without allowance for actual conditions, such as drafts or surrounding objects by which it might be affected.

—Carter, Rice & Co. v. Aubin, 172 Fed. 916.....97 C. C. A. 274

In an action against a railroad company for the death of a brakeman, alleged to have resulted from a defective hand hold on a car, where the right of recovery depended upon whether the defect existed when the car was inspected on the evening before, and was of such nature that it should have been disclosed by a careful inspection, or whether it was caused by the subsequent handling of the car, an instruction that the burden rested upon the defendant to prove a proper inspection by a preponderance of the evidence was erroneous and prejudicial to defendant, since, while it was its duty to produce evidence of the inspection, the burden of proof to establish its negligence remained on the plaintiff.

—Chicago, I. & L. Ry. Co. v. Davis, 172 Fed. 861....97 C. C. A. 281

The employer's liability act (Act Cong. April 22, 1908, 35 Stat. 65, c. 149) is not retroactive, and does not authorize an action for the wrongful death by the administrator of an employé engaged in interstate commerce against his master occurring prior to the time the act took effect.

—Winfree v. Northern Pac. Ry. Co., 173 Fed. 65....97 C. C. A. 392

In an action by a servant against the master to recover for a personal injury resulting from the falling of a drawbridge, the construction of which was alleged to be defective and dangerous, it was not error to permit a workman, who assisted in building the bridge, and who testified that he told defendant's foreman in charge that the mode of construction was improper and dangerous, to state his reasons, by pointing out the defects, where such testimony was limited by the court to the purpose of showing that knowledge of the defective construction was brought home to defendant.

—Griffin Wheel Co. v. Smith, 173 Fed. 245.....97 C. C. A. 411

Plaintiff's decedent, while at work making a trench between the rails of a private spur track which led from a railroad siding to defendant's quarry, was struck and killed by a car which had been standing with others on the siding, but, being insufficiently blocked, started and ran

downgrade upon the spur track. *Held*, that the circumstances were not such as to make the rule applicable which requires unusual care and vigilance on the part of persons on railroad tracks where trains are frequently passing, and that deceased was not chargeable with contributory negligence because he did not keep a constant lookout, and that the circumstances are analogous to those cases requiring the employer to furnish a safe place for working.
—Wellington v. Pelletier, 173 Fed. 908.....97 C. C. A. 458

Where cars were negligently left standing on a side track at the top of a grade by defendants' employés without being secured, except by the setting of the brakes, and one of such cars ran down upon and killed plaintiff's intestate, the fact that the brake was released by children playing about the cars did not constitute such an intervening cause as would prevent defendant's negligence from being the efficient proximate cause of the injury.
—Wellington v. Pelletier, 173 Fed. 908.....97 C. C. A. 458

The question whether a person temporarily in charge of defendant's business was one whose principal duty was that of superintendence, so as to render defendant liable for injury to another employé through his negligence under the Massachusetts employer's liability statute, *held* properly submitted to the jury.
—Wellington v. Pelletier, 173 Fed. 908.....97 C. C. A. 458

The place in which plaintiff and another were working in a coal mine when plaintiff was injured by falling rock, while designed for a passageway when completed, but which was then completed only a part of the way, *held* not to have been a "traveling way," within the meaning of the Colorado statute requiring mining companies to timber traveling ways, but in the nature of a room, for which the company was required to furnish the timbers, to be placed by the workmen.
—Baldi v. Cedar Hill Coal & Coke Co., 173 Fed. 781..97 C. C. A. 505

When it is the duty of a master to exercise ordinary care to furnish a reasonably safe place for an employé to work, the employé has the right to assume that such duty has been performed, and is not required to exercise care to discover unknown dangers, which are not plainly observable.
—Baldi v. Cedar Hill Coal & Coke Co., 173 Fed. 781..97 C. C. A. 505

Plaintiff was employed by defendant at its stone quarry, and engaged in breaking waste rock, working beside a large pile, on which the rock were dropped from time to time by a derrick. The derrick was in charge of a boss derrickman, whose duty it was, under instructions from defendant, to operate the same, and also to give warning to plaintiff and other workmen when rock were about to be deposited on the pile. On one occasion he neglected to give such warning, and a rock slid down the pile and injured plaintiff. *Held*, that the giving of such warning signals was a part of the work of operation, in which the boss derrickman acted as a "fellow servant" of plaintiff, and not as representative of the master in the performance of a nondelegable duty to provide a safe place to work, and that his negligence gave plaintiff no right of recovery against defendant.
—Maine & N. H. Granite Corp. v. Hachey, 173 Fed. 784.....
97 C. C. A. 508

A general denial constitutes a good reply to averments in an answer of plaintiff's contributory negligence and his assumption of the risk.
—American Smelting & Refining Co. v. Karapa, 173 Fed. 607.....
97 C. C. A. 517

A servant has the right to assume that the master has performed his duty to provide and maintain a reasonably safe place in which to work, and is not required to exercise care to ascertain such fact, but assumes the risk from an unsafe place only where he knows it to be unsafe, or its dangerous condition is obvious.
—Central Coal & Coke Co. v. Williams, 173 Fed. 337..97 C. C. A. 597

Gen. St. Kan. 1905, §§ 6312, 6313, which make railroad companies liable for injuries to or the death of employés through the negligence of fellow servants, "provided that a notice in writing that an injury has been sustained, stating the time and place thereof, shall have been given by, or on behalf of, the person injured to such railroad company within eight months after the occurrence of the injury," create a new liability and confer a new right not before existing in the state, both conditioned, however, on the giving of the stated notice, which is an essential condition precedent to the right to maintain an action on such statute; and the necessity of such notice is not obviated by the fact that the action is commenced within eight months after the injury occurred.

—Simerson v. St. Louis & S. F. R. Co., 173 Fed. 612..97 C. C. A. 618

§ 2. Liabilities for injuries to third persons.

In an action against a master to recover for an injury to a third person through the alleged negligence of a servant in the line of his employment, the liability of defendant depends wholly upon the question whether the injury was caused by such negligence without contributory negligence. The question of the general competency or incompetency of the servant is immaterial in such case, and the reception of evidence on such an issue, tendered by plaintiff, and its submission to the jury, constitute error prejudicial to the defendant.

—Minot v. Snavely, 172 Fed. 212.....97 C. C. A. 30

MEASURE OF DAMAGES.

For discrimination in rates between shippers, see Carriers, § 1.

MINES AND MINERALS.

Discrimination between shippers of coal, see Carriers, § 1.
Liabilities for injuries to servant in operation of mine, see Master and Servant, § 1.
Opinion evidence in action for injuries to servant, see Evidence, § 3.
Requirements of statute of frauds affecting option to purchase mining claims, see Frauds, Statute of, § 1.
Sale of coal in violation of anti-trust law, see Monopolies, § 1.

§ 1. Public mineral lands.

The provision of Rev. St. § 2324 (U. S. Comp. St. 1901, p. 1426), for the extinguishment of the interest of a co-owner in a mining claim for his failure to contribute to the assessment work required thereby, is constitutional and valid.

—Van Sice v. Ibex Mining Co., 173 Fed. 895.....97 C. C. A. 587

A forfeiture will be enforced in a court of equity, when such relief accords more with the principles of right and justice than would the denial thereof; and this rule is particularly applicable to a forfeiture of the interest of a co-owner in a mining claim, expressly provided for by Rev. St. § 2324 (U. S. Comp. St. 1901, p. 1426), for his failure to contribute to the work of development required thereby as a matter of public policy.

—Van Sice v. Ibex Mining Co., 173 Fed. 895.....97 C. C. A. 587

The beneficial owners of part interests in a mining claim are the proper parties to give the notice to a co-owner, under Rev. St. § 2324 (U. S. Comp. St. 1901, p. 1426), to forfeit his interest for a failure to contribute to assessment work, although they have conveyed their interests in trust.

—Van Sice v. Ibex Mining Co., 173 Fed. 895.....97 C. C. A. 587

It is a common and approved practice to obtain patents from the government to mining claims in the names of the original locators, without regard to intervening changes in right or ownership, and the fact that a corporation grantee of certain owners proceeded upon an application made by prior owners, and obtained a patent running to them or their

heirs and assigns, does not estop it from asserting that the interest of one of such patentees had been forfeited under the statute and vested in its grantors prior to the patent.
—Van Sice v. Ibex Mining Co., 173 Fed. 895.....97 C. C. A. 587

§ 2. **Title, conveyances, and contracts.**
A complaint which alleges that plaintiff and defendant entered into a written contract by which plaintiff agreed to sell to defendant certain mining claims, payments to be made at stated times, and that in consideration of an extension by plaintiff of the time for making the final payment from October 1st to December 1st defendant agreed to do the assessment work for that year, but that he failed to complete the payment or to do the work, in consequence of which the claims were forfeited, relocated by others, and lost to plaintiff, to his damage to the extent of their value, for which he asks judgment, states a cause of action for breach of the contract and for the recovery of damages in some amount, the true measure of which is a matter to be determined on the proofs.
—Stamey v. Hemple, 173 Fed. 61.....97 C. C. A. 379

One who, unintentionally and in the honest belief that he is lawfully exercising a right he has, enters upon the property of another and removes his ore, his coal, his timber, or any other valuable appurtenant to his land, is liable in damages for the value of the ore, timber, or other thing, in its original place, but for no more.
But one who willfully, intentionally, or with reckless disregard of the rights of another, takes his ore, timber, or other property, and appropriates it to his own use, must respond to the owner for the full value of the property at the time he converts it, without deduction for the labor bestowed or expenses incurred in removing and preparing it for market.
—Central Coal & Coke Co. v. Penny, 173 Fed. 340....97 C. C. A. 600

The wrongful taking of the ore or timber of another, in the absence of all other evidence, raises a presumption of fact that the trespasser took it intentionally, willfully, or in reckless disregard of the rights of the owner.
—Central Coal & Coke Co. v. Penny, 173 Fed. 340....97 C. C. A. 600

When the defendant bought the land around the two acres claimed by the plaintiffs, and while it was taking ore from beneath the surface of their land, they were, and had been for more than 20 years, in the notorious, uninterrupted, exclusive, adverse possession of their land, upon which they had maintained a church and a graveyard. The church and cemetery were within 200 feet of the shaft of the mine which the defendant bought. In the deed under which the defendant claimed was an exception of two acres upon which stands a church building, heretofore known as the Wollage Colored Church, and the plaintiffs' church was so known. The officers of the defendant testified that when they bought the property their attorney advised them that the exception was void, and that they had acquired good title to the plaintiffs' land and coal; that they believed that they owned the coal, when they took it from the land of the plaintiffs; that they inquired of their grantor what title the plaintiffs had, and were informed that they had none, but were there by permission; but that they did not inquire of the plaintiffs, or of any of the members of the church, concerning their claim of title.
Held, here was substantial evidence for the jury upon the question whether or not the defendant took the plaintiffs' coal willfully, or with a reckless disregard of their rights.
—Central Coal & Coke Co. v. Penny, 173 Fed. 340....97 C. C. A. 600

MISREPRESENTATION.

See Fraud.

MODIFICATION.

Of contract, see Sales, § 2.

MONOPOLIES.

§ 1. Trusts and other combinations in restraint of trade.

The organization by a number of mercantile jobbers located in the same city of a brokerage company, of which they owned the stock, and the purchase of merchandise required by them from manufacturers and jobbers in other states through such company, instead of through other brokers previously patronized, although there was no agreement binding them to do so, and the use of their influence to extend its business, did not constitute a combination or conspiracy in restraint of interstate trade or commerce, or to monopolize the same, in violation of the Sherman anti-trust act (Act July 2, 1890, c. 647, §§ 1, 2, 26 Stat. 209 [U. S. Comp. St. 1901, p. 3200]), but was a legitimate and lawful business enterprise.

—Arkansas Brokerage Co. v. Dunn & Powell, 173 Fed. 899..... 97 C. C. A. 454

The test of an "unlawful combination" under Act July 2, 1890, c. 647, § 1, 26 Stat. 209 (U. S. Comp. St. 1901, p. 3200), is its necessary effect upon free competition in commerce among the states or with foreign nations.

A combination, the necessary effect of which is to stifle, or directly and substantially to restrict, such competition, is unlawful under that act.

But if the necessary effect of a combination is but incidentally and indirectly to restrict competition, while its chief result is to foster the trade and increase the business of those who make and operate it, it does not fall under the ban of this law.

—Union Pacific Coal Co. v. United States, 173 Fed. 737..... 97 C. C. A. 578

A coal company engaged in mining and selling its coal is not prohibited by the anti-trust act (Act July 2, 1890, c. 647, § 1, 26 Stat. 209 [U. S. Comp. St. 1901, p. 3200]), or by the law, from refusing to sell its coal, from selecting its customers, from fixing the price and terms on which it will sell its product, or from selling to different customers for different prices and on different terms.

—Union Pacific Coal Co. v. United States, 173 Fed. 737..... 97 C. C. A. 578

The Union Pacific Coal Company, Moore, its western sales agent, the Union Pacific Railroad Company, which owned all the stock of the coal company, the Oregon Short Line Railroad Company, and Buckingham, the superintendent of transportation of the railroad companies, were indicted and convicted for combining to restrain interstate commerce by refusing to sell coal to and to transport coal for one Sharp unless he would discontinue an advertisement of sale of coal at a reduced rate.

Held, there was no substantial evidence of any combination between any two of the defendants either to refuse to sell coal to Sharp or to refuse to transport it for him.

—Union Pacific Coal Co. v. United States, 173 Fed. 737..... 97 C. C. A. 578

A combination between a corporation and its officer or agent in violation of the anti-trust act (Act July 2, 1890, c. 647, § 1, 26 Stat. 209 [U. S. Comp. St. 1901, p. 3200]) cannot be formed by the thoughts or acts of the officer or agent alone, without the conscious participation in it of any other officer or agent of the corporation.

The union of two or more persons, the conscious participation of two or more minds, is indispensable to an unlawful combination.

—Union Pacific Coal Co. v. United States, 173 Fed. 737..... 97 C. C. A. 578

MORTGAGES.

Of personal property, see Chattel Mortgages.
Of vessels, see Shipping, § 1.

MOTIONS.

Direction of verdict in civil actions, see Trial, § 1.
Presentation of objections for review, see Appeal and Error, § 2.

MULTIPLICITY OF SUITS.

Jurisdiction of equity to avoid, see Equity, § 1.

MUNICIPAL CORPORATIONS.

Apportionment of license fees in towns in Alaska, see Licenses, § 1.
Jurisdiction of United States court to restrain issuance of municipal bonds as dependent on amount in controversy, see Courts, § 2.
Laws impairing contract of telephone company to use street, see Constitutional Law, § 1.
Street railroads, see Street Railroads.

§ 1. **Fiscal management, public debt, securities, and taxation.**
Where a bill sought to restrain the issuance of bonds by a city for the construction of a waterworks system and to restrain the city from entering into a contract for the construction of such system on the ground that the proceedings were void, a preliminary injunction restraining the issuance of the bonds, and also restraining the city from making any contract or incurring any indebtedness for a waterworks system or supply, was to be construed in accordance with the allegations of the bill and the purposes of the suit, and was, therefore, not objectionable as enjoining the city from taking further steps for a new bond issue to acquire a water system.
—City of Helena v. Helena Waterworks Co., 173 Fed. 18..... 97 C. C. A. 320

NAMES.

See Trade-Marks and Trade-Names.

NATIONAL BANKS.

See Banks and Banking, § 2.

NAVIGABLE WATERS.

See Waters and Water Courses.

NEGLIGENCE.

Causing death, see Death, § 1.
Laws applying rule of comparative negligence in action by servant against railroad as denying the equal protection of law, see Constitutional Law, § 2.

By particular classes of persons.

See Carriers, § 4; Railroads, § 1.
Employers, see Master and Servant, § 1

Condition or use of particular species of property, works, machinery, or other instrumentalities.

See Railroads, § 1; Street Railroads, § 1.

Contributory negligence.

Of person injured by operation of railroad, see Railroads, § 1.
Of servant, see Master and Servant, § 1.

§ 1. Contributory negligence.

The negligence of the driver of an automobile is not imputable to an occupant, who is riding as the guest of another and has no control over the movements of the car.

—Dale v. Denver City Tramway Co., 173 Fed. 787...97 C. C. A. 511

§ 2. Actions.

Under the settled doctrine of the federal courts, a municipal ordinance, to be admissible in evidence in support of a charge of negligence, must be pleaded.

—Dale v. Denver City Tramway Co., 173 Fed. 787...97 C. C. A. 511

NEW TRIAL.

Review of discretionary rulings on motion for, see Appeal and Error, § 4.

NOTICE.

Of injuries to servant, see Master and Servant, § 1.

OBLIGATION OF CONTRACTS.

Laws impairing, see Constitutional Law, § 1.

OFFICERS.

Authority to arrest without warrant, see Arrest, § 1.
Bank officers, see Banks and Banking, §§ 1, 2.

OPINION EVIDENCE.

In civil actions, see Evidence, § 3.

OPINIONS.

Of courts, see Courts, § 1.

ORDERS.

Review of appealable orders, see Appeal and Error.

PAROL EVIDENCE.

In civil actions, see Evidence, § 2.

PARTIES.

Bringing in parties by cross-bill in equity, see Equity, § 2.
Character ground of jurisdiction, see Courts, § 2.
Defects, ground for abatement, see Abatement and Revival, § 1.

In actions by or against particular classes of persons.

See Corporations, § 3.

In particular actions or proceedings.

See Ejectment, § 1.
For injuries by flowage, see Waters and Water Courses, § 4.
For wrongful death, see Death, § 1.

To conveyances, contracts, or other transactions.

See Contracts, § 2.

PASSENGERS.

See Carriers, § 4.

PATENTS.

§ 1. Patentability.

A pioneer patent is one which first discloses means to accomplish a certain result, and the term does not apply to a patent for new means to accomplish a result already attained in another way, although they may be an improvement on the old way.
—National Dump Car Co. v. Ralston Steel Car Co., 172 Fed. 393..... 97 C. C. A. 91

Where the question of invention is left to the jury in an action for infringement of a patent, no evidence tending to show the true state of the art at the date of the claimed invention should be excluded.
—Holt Mfg. Co. v. Best Mfg. Co., 172 Fed. 409.....97 C. C. A. 107

A device which does not operate on the same principle as that of a patent cannot be an anticipation.
—Los Alamitos Sugar Co. v. Carroll, 173 Fed. 280...97 C. C. A. 446

It is not sufficient to constitute anticipation that the devices relied upon might, by a process of modification, reorganization, or combination, be made to accomplish the function performed by the device of the patent.
—Los Alamitos Sugar Co. v. Carroll, 173 Fed. 280...97 C. C. A. 446

§ 2. Applications, and proceedings thereon.

The presumption of the validity of a patent arising from its issuance is weakened by the fact that certain prior patents, claimed to anticipate, were not cited to nor considered by the examiner.
—Westinghouse Electric & Mfg. Co. v. Toledo, P. C. & L. Ry. Co., 172 Fed. 371.....97 C. C. A. 69

§ 3. Term.

The provisions of Rev. St. § 4887, before its amendment in 1897 (U. S. Comp. St. 1901, p. 3382), that "every patent granted for an invention which has been previously patented in a foreign country shall be so limited as to expire at the same time with the foreign patent," related to matters of substance and not of form merely, applying only where there is a valid foreign patent, and a United States patent for an alleged invention which was covered by a prior certificate of addition to a French patent is not limited to the term of the French patent, where the same was adjudged null and void by the French courts on the ground of anticipation; the effect of such judgment under the law of France being to

render the patent, with any certificates of addition thereto, a nullity from the beginning. Buffington, Circuit Judge, dissenting.

—Hennebique Const. Co. v. Myers, 172 Fed. 869.....97 C. C. A. 289

§ 4. **Construction and operation of letters patent.**

While the fact that the device of a patent has never been put in use does not affect the validity of the patent, it is ground for giving it a strict construction.

—Westinghouse Electric & Mfg. Co. v. Toledo, P. C. & L. Ry. Co., 172 Fed. 371.....97 C. C. A. 69

Where terms which are not technical terms of the art are used in the claims of a patent to differentiate between different tubes in the patented structure, the specification may be referred to for the purpose of ascertaining their meaning as so used.

—Fowler & Wolfe Mfg. Co. v. National Radiator Co., 172 Fed. 661... 97 C. C. A. 187

A patent expressly for an improvement on the device of a prior patent to the same inventor should be read in connection with the first, and will not be declared void because, standing alone, it does not describe an operative apparatus.

—Los Alamitos Sugar Co. v. Carroll, 173 Fed. 280...97 C. C. A. 446

§ 5. **Infringement.**

Rev. St. § 4922 (U. S. Comp. St. 1901, p. 3396), which provides that a patentee who has inadvertently claimed more than he is entitled to cannot recover costs in a suit for infringement unless he has filed a disclaimer as to the invalid claims before commencement of the suit, makes it obligatory on the courts to deny costs in such case both in the Circuit and appellate courts, although the decision that certain claims are invalid is first made by the latter court in affirming the decree of the court below as to other claims on general assignments of error which challenge the validity of all of the claims.

—Novelty Glass Mfg. Co. v. Brookfield, 172 Fed. 221..97 C. C. A. 25

The question does not depend on the pleadings in the appellate court, and cannot be made to. Even, therefore, if the assignments of errors are severable or distributive between the different claims of patents, and in consequence have to be overruled, the costs must nevertheless be denied; such assignments only going to the issues raised according to which the decree below is to be considered.

—Novelty Glass Mfg. Co. v. Brookfield, 172 Fed. 221..97 C. C. A. 25

The effect of failure to disclaim is negative merely. The statute denies costs, but does not give them, and defendant is not entitled to recover costs, because of the want of disclaimer.

—Novelty Glass Mfg. Co. v. Brookfield, 172 Fed. 221..97 C. C. A. 25

Under Rev. St. 4922 (U. S. Comp. St. 1901, p. 3396), providing that a patentee who has inadvertently claimed more than he is entitled to cannot recover costs in a suit for infringement unless he has filed a disclaimer as to the invalid claims before commencement of the suit, a plaintiff who fails to file a disclaimer, cannot upon that account be refused an account for profits and damages.

—Novelty Glass Mfg. Co. v. Brookfield, 172 Fed. 221..97 C. C. A. 25

Where no special equities are pleaded, a suit in equity cannot be maintained for infringement of a patent which expired before the suit was brought.

—T. W. & C. B. Sheridan Co. v. Robert O. Law Co., 172 Fed. 223.... 97 C. C. A. 27

The Best patent, No. 410,306, for a combined steam harvester and thrasher, is for a claimed combination of elements all of which were old; the chief feature of novelty claimed for the combination being the operation of the cutting and thrashing machinery by means of a supplementary engine mounted upon the thrasher frame, to which steam is supplied from

the boiler of the traction engine by means of a flexible pipe. Such supplementary engines had previously been used for the same purpose on similar machines driven by horse power. *Held*, that such patent was not a pioneer patent, but an improvement patent only, and that it was error in an action for its infringement to refuse to so instruct the jury, and to submit the question to them for decision.
—Holt Mfg. Co. v. Best Mfg. Co., 172 Fed. 409.....97 C. C. A. 107

The defense of laches to a suit for infringement of patents *held* not sustained by the evidence.
—Los Alamitos Sugar Co. v. Carroll, 173 Fed. 280...97 C. C. A. 446

Where an infringing article contains a material and substantial improvement over that of the patent, the burden rests upon the patentee to separate the profits arising from the infringing parts by reliable and tangible evidence; nor does the fact that the infringer kept no separate account of such profits relieve him from such burden, where the books were so kept before there was any knowledge or belief of infringement, and without reference thereto. Decree (C. C. 1904) 129 F. 604, affirmed.
—Westinghouse Electric & Mfg. Co. v. Wagner Electric & Mfg. Co., 173 Fed. 361.....97 C. C. A. 621

Where an infringing article contains a material and substantial improvement over that of the patent, the patentee is not entitled to recover all of the profits made by the infringer, but only such as resulted from the use of the infringing parts.
—Westinghouse Electric & Mfg. Co. v. Wagner Electric & Mfg. Co., 173 Fed. 361.....97 C. C. A. 621

§ 6. Decisions on the validity, construction, and infringement of particular patents.

The Brown patent, No. 618,163, claim 6, for a method of electrical control, designed to secure an acceleration of speed of motors and at the same time protect them from injury, is void for anticipation by the Potter patent, No. 524,396.
—Westinghouse Electric & Mfg. Co. v. Toledo, P. C. & L. Ry. Co., 172 Fed. 371.....97 C. C. A. 69

The Caswell reissue patent, No. 12,447 (original No. 806,394), for an improvement in cars, consisting of trapdoors in the bottom of the car which may be opened to dump its load, claims 31, 32, 44, 48, 58, 59, 60, 61, 62, and 63, which relate only to the doors, and means for operating them, disclose invention, but not of a primary character, and are not infringed by a device which does not contain the longitudinal shaft operated by means of cogged pinions and plates to open and close the doors, which is an essential feature of each claim, nor any equivalent therefor having substantially the same mode of operation.
—National Dump Car Co. v. Ralston Steel Car Co., 172 Fed. 393..... 97 C. C. A. 91

The Fowler patent, No. 609,800, for a radiator, narrowly construed as required by the prior art, *held* not infringed.
—Fowler & Wolfe Mfg. Co. v. National Radiator Co., 172 Fed. 661.. 97 C. C. A. 187

The Hill patent, No. 527,792, for a bracket for car doors, fastened to the side of the car by a screw having a square countersunk head, not rotatable on the bracket, and removable only by revolving the bracket itself, which cannot be done when the door is closed, is void for anticipation by the Eubank patent, No. 512,467, the device of which operates on the same principle; the only difference being that instead of a screw, a stud integral with the bracket, and having flanges working in the manner of the threads of a screw, is used.
—Chicago Grain Door Co. v. National Malleable Castings Co., 173 Fed. 918.....97 C. C. A. 324

The Carroll patent No. 561,485, for a load-dumping apparatus, claims 1 and 2, which cover a combination of elements in an apparatus especially

designed to dump wagon loads of beets, and which is highly successful in accomplishing such purpose in much less time than required by any previously known means, were not anticipated, although the elements of the combination were separately old, and disclose invention. Patent No. 595,-236 to the same inventor for an improvement on the apparatus of the prior patent also *held* valid, and both *held* infringed.

—Los Alamitos Sugar Co. v. Carroll, 173 Fed. 280...97 C. C. A. 446

The Thalacker patent, No. 502,541, for an electric safety fuse, the essential feature of which is the use of an auxiliary fuse, so placed that it may be seen, and which will be destroyed when the main fuse is blown, as an indicator of the condition of the main fuse, was not anticipated, and discloses invention, and is entitled to a fairly broad construction; also *held* infringed.

—General Electric Co. v. Smith, 173 Fed. 790.....97 C. C. A. 514

The Westinghouse patent, No. 366,362, claim 4, for the combination, substantially as described, of an electric converter constructed with open spaces in its core, an inclosing case, and a nonconducting fluid or gas in said case, adapted to circulate through said spaces and about the converter for the purpose of cooling the same, construed, and *held* not infringed by a converter in which spaces were left between the coils, and between them and the inclosing case, for containing a cooling liquid, but which had no open spaces in its core; that being an essential element of the patented combination.

—Westinghouse Electric & Mfg. Co. v. Wagner Electric & Mfg. Co., 173 Fed. 361.....97 C. C. A. 621

---

§ 7. Patents enumerated.

ENGLISH.

8,709. Dump car, cited..... 91
11,017. Dump car, cited..... 91

1890.

19,076. Electric safety fuse, cited.. 514

FRENCH.

223,546. Concrete construction, held not to cause United States patent No. 611,-907 to expire..... 289

UNITED STATES.

DESIGN.

28,761. Radiator 187

ORIGINAL.

69,075. Dump car, cited..... 91
101,030. Dump car, cited..... 91
109,188. Dump car, cited..... 91
154,651. Radiator, cited..... 187
264,659. Electric safety fuse, cited 514
342,526. Dumping car, cited..... 91
347,127. Radiator, cited..... 187
355,216. Radiator, cited..... 187
366,362. Electrical converter, claim 4, construed and held not infringed 621
393,323. Electric switch, cited..... 69
403,584. Dumping car, cited..... 91
410,306. Combined steam harvester and thrasher, construed and held not a pioneer patent 107
417,122. Electric safety fuse, cited 514
428,741. Machine for covering and binding books, cited.... 27
435,958. Method of electric motor controller, cited..... 69
444,900. Apparatus for electric motor controller, cited..... 69
470,299. Dump car, cited..... 91
476,366. Dump car, cited..... 91
484,491. Dump car, cited..... 91
489,111. Dump car, cited..... 91
493,553. Machine for covering and binding books, decree sustaining bill for infringment affirmed..... 27
495,096. Dump car, cited..... 91
502,541. Electric safety fuse, construed and held not anticipated, valid, and infringed 514
512,467. Bracket for car doors, held to anticipate patent No. 527,792 324
524,396. Apparatus for electric motor controller, held to anticipate claim 6 of patent No. 618,163..... 69
527,792. Bracket for car doors, construed and held void for anticipation by patent No. 512,467..... 324
561,485. Load dumping apparatus, claims 1 and 2, held not anticipated and infringed 446
577,339. Sulky, cited..... 668
587,442. Electric motor controller, cited 69
590,637. Dump car, cited..... 91
595,236. Load dumping apparatus, held infringed..... 446
598,136. Dump car, cited..... 91

609,800. Radiator, held limited and not infringed..... 187
610,218. Dump car, cited..... 91
611,438. Speed wagon, cited..... 668
611,907. Construction of joists, girders and the like, held not to expire by reason of expiration of French patent No. 223,546..... 289
613,279. Dump car, cited..... 91
618,163. Method and apparatus for electric motor control, claim 6 held void for anticipation by patent No. 524,396 69
619,670. Dump car, cited..... 91
644,890. Steel car and door mechanism therefor, cited..... 91
645,587. Dump car, cited..... 91
657,012. Dump car, cited..... 91
676,101. Dump car, cited..... 91
689,197. Dump car, cited..... 91
707,342. Dump car, cited..... 91
736,471. Dump car, cited..... 91
762,118. Dump car, cited..... 91
763,841. Dumping mechanism for metallic cars, cited..... 91
763,947. Dump car, cited..... 91
768,722. Dumping mechanism for metallic cars, cited..... 91
806,394. Trap door for dump car, claims 31, 32, 44, 48, 58, 59, 60, 61, 62, and 63, held valid and not infringed 91

REISSUED.

12,447. Trap door for dump car, claims 31, 32, 44, 48, 58, 59, 60, 61, 62 and 63, held valid and not infringed 91

PAYMENT.

Subrogation on payment, see Subrogation.

§ 1. **Requisites and sufficiency.**

The acceptance by a creditor of a promissory note of his debtor for his antecedent debt does not extinguish it, unless the note is paid. It is a conditional, and not an absolute, payment.

—A. Leschen & Sons Rope Co. v. Mayflower Gold Mining & Reduction Co., 173 Fed. 855.....97 C. C. A. 465

A clear agreement by the creditor that he will take the risk of the payment of the note, and that the debt is discharged thereby, or an indubitable intention so to do, is requisite to extinguish a debt by the taking of the debtor's note.

—A. Leschen & Sons Rope Co. v. Mayflower Gold Mining & Reduction Co., 173 Fed. 855.....97 C. C. A. 465

An agreement that a debt shall be paid, or that it has been paid, by the note of the debtor, is a contract for an extension of time, and that the debt shall be paid, or has been paid, by the note on condition that the note is paid.

—A. Leschen & Sons Rope Co. v. Mayflower Gold Mining & Reduction Co., 173 Fed. 855.....97 C. C. A. 465

§ 2. **Pleading, evidence, trial, and review.**

A lien, a title, or other security held for the payment of a debt strengthens the presumption that an agreement that a debt is to be paid, or has been paid, by the note of a debtor, is subject to the condition that the note is subsequently paid.

—A. Leschen & Sons Rope Co. v. Mayflower Gold Mining & Reduction Co., 173 Fed. 855.....97 C. C. A. 465

PENAL STATUTES.

Construction, see Statutes, § 1.

PERSONAL INJURIES.

Particular causes or means of injury.

See Negligence.
Operation of railroads, see Railroads, § 1.

Particular classes of persons injured.

Employé, see Master and Servant, § 1
Passenger, see Carriers, § 4.
Traveler on highway crossing railroad, see Railroads, § 1.

PETITION.

In bankruptcy, see Bankruptcy, § 2.

PLEADING.

Allegations as to particular facts, acts, or transactions.

See Estoppel, § 1.

In particular actions or proceedings.

See Equity, § 2; Negligence, § 2.
For injuries to servant, see Master and Servant, § 1.
Indictment or criminal information or complaint, see Indictment and Information.
On guaranty, see Guaranty, § 1.
On insurance policy, see Insurance, § 1.

POLICY.

Of insurance, see Insurance.

POSSESSION.

See Adverse Possession.

POST OFFICE.

§ 1. Offenses against postal laws.

In a prosecution under Rev. St. § 5480 (U. S. Comp. St. 1901, p. 3696), for using the mails to defraud, it is a defense that defendant honestly believed that the representations made in the letters or circulars which he is charged with having sent through the mails were true, and that he had no actual intent to defraud.

—Rudd v. United States, 173 Fed. 912.....97 C. C. A. 462

In a prosecution under Rev. St. § 5480 (U. S. Comp. St. 1901, p. 3696), for using the mails to defraud, if a defense that defendant honestly believed that the representations made in the letters or circulars which he is charged with having sent through the mails were true, and that he had no actual intent to defraud, is made, it is for the determination of the jury.

—Rudd v. United States, 173 Fed. 912.....97 C. C. A. 462

One who devises a fraudulent scheme, to be effected by opening or intending to open a correspondence or communication with himself by means of the post office establishment of the United States, is guilty of no offense punishable under section 5480, Rev. St. U. S. (U. S. Comp. St. 1901, p. 3696).

A fraudulent scheme, which the deviser intends to effect by either opening or intending to open a correspondence or communication with some other person by means of the post office establishment, or by inciting some other person to open communication with him, is essential to the offense.

—Erbaugh v. United States, 173 Fed. 433.....97 C. C. A. 663

PRACTICE.

Adoption by United States courts of practice of state courts, see Courts, § 2.
In patent office, see Patents, § 2.

In particular civil actions or proceedings.

See Ejectment.

Particular proceedings in actions.

See Abatement and Revival; Depositions; Evidence; Stipulations; Trial.

Particular remedies in or incident to actions.

See Injunction.

Procedure in criminal prosecutions.

See Criminal Law.

Procedure in exercise of special or limited jurisdiction.

In admiralty, see Admiralty; Maritime Liens, § 2.
In bankruptcy, see Bankruptcy, § 2.
In equity, see Equity.

Procedure in or by particular courts or tribunals.

Procedure of particular courts, see Courts.

Procedure on review.

See Appeal and Error.

PREFERENCES.

Effect of proceedings in bankruptcy, see Bankruptcy, § 3.

PREJUDICE.

Ground for reversal in civil actions, see Appeal and Error, § 4.

PRESCRIPTION.

Acquisition of rights, see Adverse Possession, § 1.

PRESENTMENT.

By grand jury, see Indictment and Information, § 1.

PRESUMPTIONS.

Of grant to sustain adverse possession, see Adverse Possession, § 2.

PRINCIPAL AND AGENT.

Admissions by agent, see Evidence, § 1.

PRINCIPAL AND SURETY.

See Guaranty; Indemnity.

PRIVILEGED COMMUNICATIONS.

Defamatory communications, see Libel and Slander, § 2.
Disclosure by witness, see Witnesses, § 1.

PROCEDURE.

See cross-references under Practice.

PROCESS.

Particular forms of writs or other process.

See Arrest; Injunction.

PROMOTERS.

Of corporation, see Corporations, § 1.

PROOF.

Taking and filing proofs in admiralty, see Admiralty, § 1.

PROPERTY.

Particular species of property.

See Mines and Minerals; Shipping; Trade-Marks and Trade-Names.

Transfers and other matters affecting title.

See Adverse Possession.

PROVINCE OF COURT AND JURY.

In criminal prosecutions, see Criminal Law, § 2.

PROXIMATE CAUSE.

Of injuries to servant, see Master and Servant, § 1.

PUBLIC DEBT.

See Municipal Corporations, § 1.

PUBLIC LANDS.

Appropriation of water rights, see Waters and Water Courses, § 1.
Mineral lands, see Mines and Minerals, § 1.

PUBLIC SERVICE CORPORATIONS.

See Carriers; Railroads; Street Railroads; Telegraphs and Telephones.

PUBLIC WATER SUPPLY.

See Waters and Water Courses, § 4.

PUNISHMENT.

Fines, see Fines.
For violation of injunction, see Injunction, § 3.
Of seamen, see Seamen.

QUESTIONS FOR JURY.

In civil actions, see Trial, § 1.
In criminal prosecutions, see Criminal Law, § 2.

RAILROADS.

See Street Railroads.
As employers, see Master and Servant.
Carriage of goods and passengers, see Carriers.
Laws applying rule of comparative negligence in action by servant against railroad as denying equal protection of law, see Constitutional Law, § 2.
Laws governing contract for construction work, see Contracts, § 1.
Reports by railroad to taxing officers as evidence, see Evidence, § 1.
Taxation of, see Taxation, § 2

§ 1. Operation.

Evidence *held* to establish contributory negligence of a plaintiff, who was struck and injured by a fast train while driving over a dangerous crossing on defendant's railroad, where there were a number of tracks, with which she was familiar, where by her own testimony, after having stopped to look and listen at the usual place, some 40 feet before reaching the first track, and waiting for a freight train on such track to pass, which train, owing to a curve in the track, obstructed the view of any train approaching from the opposite direction, she at once drove on the crossing behind such train, without waiting until she could see whether the other tracks were clear, and was struck while crossing the second track.

—Delaware & H. Co. v. Flannelly, 172 Fed. 328.....97 C. C. A. 112

A locomotive engine used in interstate commerce need not necessarily have automatic couplers at both ends to comply with Safety Appliance Act March 2, 1893, c. 196, § 2, 27 Stat. 531 (U. S. Comp. St. 1901, p. 3174), where one end only is coupled and intended to be coupled to other cars.

—Wabash R. Co. v. United States, 172 Fed. 864.....97 C. C. A. 284

The requirement of Safety Appliance Act March 2, 1893, c. 196, § 2, 27 Stat. 531 (U. S. Comp. St. 1901, p. 3174), that all cars used in moving interstate traffic shall be equipped with automatic couplers coupling by impact, and which can be uncoupled without the necessity of men going between the ends of the cars, is absolute; and it is no defense to an action against a railroad company for its violation by using cars on which the couplers were so out of repair as to necessitate men going between the cars to operate the same that the company used due diligence to keep the couplers in good repair.

—Wabash R. Co. v. United States, 172 Fed. 864.....97 C. C. A. 284

Where a railroad company contracted with a landowner in securing right of way to build and maintain a safe and adequate crossing on the land for the owner's use, and thereafter made a crossing which remained for a year without alteration, such facts are sufficient to establish that

the crossing made was intended as the one required by the contract, and the company is liable for an injury to the landowner resulting from its failure to comply with such contract by making it reasonably safe and adequate.

—Minneapolis, St. P. & S. S. M. Ry. Co. v. Stevenson, 172 Fed. 866.. 97 C. C. A. 286

In an action against a railroad company to recover for an injury to plaintiff by reason of the alleged negligence of defendant in constructing a private crossing, the question of defendant's negligence and of plaintiff's contributory negligence *held* properly submitted to the jury under the evidence.

—Minneapolis, St. P. & S. S. M. Ry. Co. v. Stevenson, 172 Fed. 866.. 97 C. C. A. 286

The rule is well settled that, notwithstanding such contributory negligence of a traveler in crossing railroad tracks as will preclude recovery for any primary negligence of the railroad company in operating its trains so as to cause his injury, he may still recover if, after actually discovering that he was in imminent peril, the railroad company by the exercise of ordinary care could have prevented his injury and failed to do so; but in such case some new act of negligence must arise to create the cause of action, and must be established by proof, unaided by the former acts, which have been excused by the traveler's contributory negligence.

—St. Louis & S. F. R. Co. v. Summers, 173 Fed. 358..97 C. C. A. 328

The fact alone that those in charge of a railroad train observe a person driving with a team toward a crossing ahead of the train is not sufficient to apprise them that he is in danger, or to charge them with negligence for not stopping the train; but they have the right to presume that the traveler will stop before reaching the crossing, as the law requires.

—St. Louis & S. F. R. Co. v. Summers, 173 Fed. 358..97 C. C. A. 328

Under the rule that a railroad company may be liable for the injury of a person at a crossing, notwithstanding his contributory negligence, if after actually discovering his peril the servants of the company could by the exercise of ordinary care have avoided his injury, but failed to do so, the company cannot be held liable if such failure resulted from a defect in appliances of the train, which existed previously, and which made it impossible to stop the train in time, notwithstanding the efforts of the trainmen.

—Illinois Cent. R. Co. v. Nelson, 173 Fed. 915.....97 C. C. A. 331

Plaintiff's intestate negligently walked upon a railroad crossing immediately in front of a freight train, which was being backed toward the crossing at a speed of four or five miles an hour, and was knocked down between the rails, and two or three cars passed over him, causing his death. It was claimed by plaintiff that he was not killed until struck by the second car, and that the train could have been stopped before such car reached him by the exercise of proper care after his danger was discovered; but the evidence left both of such questions in doubt. It was further shown that, as soon as the brakemen on the cars saw that deceased was about to step upon the track, they shouted warnings to him, and also signaled the engineer, and that as soon as the latter saw the signals he did everything possible to stop the train; but he was not certain that he saw the first signal, nor was it certain that the failure to stop within a shorter distance was not due to defective brake appliances. *Held*, that such evidence did not warrant a recovery against the company; the negligence of deceased being conceded.

—Illinois Cent. R. Co. v. Nelson, 173 Fed. 915.....97 C. C. A. 331

A man who in the daytime walked upon a railroad crossing immediately in the way of an engine, which was backing toward the crossing at a speed of five or six miles an hour, and which was in plain sight as it approached, with nothing to obstruct his view, is as matter of law chargeable with contributory negligence, which precludes recovery for his death so caused.

—Colorado & S. Ry. Co. v. Tucker, 173 Fed. 605.....97 C. C. A. 555

Under the common law a railroad company owes no duty to a mere trespasser, on its tracks without the consent of any one having authority to permit his presence, except to do him no intentional or wanton injury.
—Louisville & N. R. Co. v. Womack, 173 Fed. 752....97 C. C. A. 559

Evidence *held* sufficient to warrant the submission to the jury of the question whether the employés of a railroad company, in charge of the engine of a freight train, which collided with a hand car, complied with Shannon's Code Tenn. § 1574, subsec. 4, which provides that the engineer, fireman, or some other person on the locomotive shall be kept always upon the lookout ahead, and that when any person, animal, or other obstruction appears on the road the alarm whistle shall be sounded, the brakes put down, and every possible means employed to stop the train and prevent an accident; there being evidence that the persons upon the hand car saw the engine when 200 yards distant, but that those on the engine did not see the hand car until within a car's length.
—Louisville & N. R. Co. v. Womack, 173 Fed. 752....97 C. C. A. 559

Plaintiff was driving with a load of lumber over the tracks at a street crossing of defendant's railroad, when the wagon was struck by a passing engine and he was injured. There were six tracks, and on the outside track, which was the second from that on which he was struck, cars were standing, which obstructed the view. There were gates at the crossing in charge of a watchman, which were up when plaintiff drove in; but whether they were closed when a train passed, just prior to that, or whether, if not, plaintiff observed the fact, was left uncertain by the evidence. Plaintiff was familiar with the crossing and knew it was dangerous. *Held*, that it was his duty to stop and listen before driving on the through track, where he was struck, if his view was so obstructed that he could not see, and that in failing to do so, and in driving on the track without exercising any care whatever to ascertain whether a train or engine was approaching, he was guilty of contributory negligence.
—Erie R. Co. v. Schultz, 173 Fed. 759.....97 C. C. A. 573

RATE.

Discrimination in rates between shippers, see Carriers, § 1.

RATIFICATION.

Of act of promoter of corporation, see Corporations, § 1.

REAL ACTIONS.

See Ejectment.

REBATES.

By carrier, see Carriers, § 1.

RECEIVERS.

Appointment in bankruptcy proceedings, see Bankruptcy, § 2.

RECORDS.

Of chattel mortgages, see Chattel Mortgages, § 2.
Transcript on appeal or writ of error, see Appeal and Error, § 3.

RELEASE.

See Payment.

REQUESTS.

For instructions in civil actions, see Trial, § 2.

RESCISSION.

Of contract for sale of goods, see Sales, § 2.

RESTRAINT OF TRADE.

Trusts and other combinations, see Monopolies, § 1.

REVENUE.

See Customs Duties; Taxation.

REVIEW.

See Appeal and Error; Criminal Law, § 3.

RISKS.

Assumed by employé, see Master and Servant, § 1.

SAFETY APPLIANCE ACT.

See Railroads, § 1.

SALES.

Of realty, see Vendor and Purchaser.

§ 1. Requisites and validity of contract.

The Metropolitan Street Railway Company having leased its road to the New York City Railway Company, the lessee's vice president and general manager received on May 10, 1907, from claimant a written proposal to furnish certain cables. This proposal was accepted and ratified by both parties on May 13th following. The agreement required formal orders to be sent from time to time by the purchasing agent of the railway company to claimants, stating the amount of cables needed and other details. Three orders were sent and signed, "Metropolitan Street Railway Company, per A. C. Tully, Purchasing Agent," and required the cable company to deliver specified cables to "New York City Railway Company" in accordance with proposal of May 10th and letter of acceptance, etc. Such orders were on the printed forms of the Metropolitan Company, and were accompanied by printed bill forms setting forth the Metropolitan Company as the one to be billed against. *Held*, that the purchaser of the cables was the New York City Railway Company, and that the Metropolitan Company

could not be made liable therefor, though they were to be used as a part of the Metropolitan's property.
—Pennsylvania Steel Co. v. New York City Ry. Co., 172 Fed. 659... 97 C. C. A. 185

Misrepresentation of a material fact on which a seller relies in making a sale is ground for rescission, though the misrepresentation was innocent.
—In re American Knit Goods Mfg. Co., 173 Fed. 480..... 97 C. C. A. 486

Where a corporation credit statement recited that the present mortgages did not cover any of the "quick assets" of the company, amounting to $635,165.35 in cash, merchandise, accounts receivable, etc., which, together with equities in real estate and machinery of $194,775.01, made the total assets $829.940.36, the term "quick assets" was used merely to distinguish liquid assets from those permanently invested in the business, like real estate and machinery, and included amounts charged against officers for return of part of salaries paid them in a previous year, in accordance with the agreement of employment.
—In re American Knit Goods Mfg. Co., 173 Fed. 480..... 97 C. C. A. 486

In a proceeding against a bankrupt's estate to recover merchandise on rescission of a contract of sale for alleged misrepresentation in a financial statement of the bankrupt's assets, the burden was on petitioner to show that the statement contained a material misrepresentation of fact on which petitioner relied.
—In re American Knit Goods Mfg. Co., 173 Fed. 480..... 97 C. C. A. 486

A court could not infer that a bankrupt's financial statement used as a basis for credit was false on February 28, 1905, because the bankrupt's assets realized very much less than the amounts called for in the statement when they came into the possession of the receiver in bankruptcy in August following.
—In re American Knit Goods Mfg. Co., 173 Fed. 480..... 97 C. C. A. 486

By a contract made by an extended correspondence an asphalt company agreed to furnish to a paving company crude asphalt from its mine and liquid flux necessary to make an asphaltic paving cement, sufficient in quantity to complete certain contracts of the paving company with the city of New Orleans, at the price of $37 per ton, with a guaranty that each ton of the cement would lay 90 square yards of pavement specified. The cement was to be made in New Orleans by means of a portable plant furnished by the asphalt company, which was also to furnish a man to have full charge of the making and laying of the same, his salary to be paid by the paving company. *Held* that, construing the contract in the light of all the correspondence, it required the paving company to pay for the asphalt at the rate of $37 for each 90 square yards of pavement laid, and not for each ton of the crude material shipped.
—Union Development & Construction Co. v. Globe Asphalt Co., 173 Fed. 866.....97 C. C. A. 650

§ 2. Modification or rescission of contract.

A seller is only required to return benefits as a condition precedent to a rescission of the sale for misrepresentations, in an action at law when the rescission is the act of the seller; no such return being required where the rescission is asked of a court of equity, since in that case all equities will be protected by the decree.
—In re American Knit Goods Mfg. Co., 173 Fed. 480..... 97 C. C. A. 486

§ 3. Performance of contract.

A contract to furnish certain machinery, to be subject to tests after its shipment and installation to determine whether it met the warranties

on which it was sold before it was to be fully paid for, which installation and tests would necessarily require a considerable time, provided that "the acceptance of the machinery upon arrival shall constitute a waiver of all damages for delays." *Held* that, construing the entire contract together, the word "acceptance" in such provision was used in the sense only of "receipt," meaning that the voluntary receipt of the machinery on its shipment, notwithstanding delays, should be a waiver of the same, although still subject to the tests as to its efficiency and final acceptance.

—Lancaster Electric Light, Heat & Power Co. v. Platt Iron Works Co., 172 Fed. 314.....97 C. C. A. 148

SALVAGE.

§ 1. Right to compensation.

The principles which govern the allowance of compensation for a salvage service are not the same where the service is rendered under an employment and where it is volunteered. In the latter case it is more meritorious, and the salving vessel takes the risk of receiving nothing if the service is unsuccessful, and if successful is entitled to a liberal reward; while if employed she is entitled to payment on a quantum meruit in any event, and whether entitled to more in case of success depends on the circumstances and the spirit in which the service is rendered.

—Pacific Mail S. S. Co. v. Commercial Pacific Cable Co., 173 Fed. 28.. 97 C. C. A. 346

§ 2. Amount and apportionment.

The steamship Manchuria grounded on a coral reef in the bay of Waimanalo on the northeast side of the island of Oahu, Hawaii. Being unable to free herself with the aid of three other vessels which went to her assistance, the owners' agent applied for the assistance of libelant's cable ship, Restorer, a vessel of 4,000 horse power, then lying idle at Honolulu. Libelant's superintendent stated that she could not go without permission from New York, which was cabled for and obtained. In the meantime the master refused to fire up unless the expense was guaranteed, and such guaranty was given. On receiving permission libelant's agent required a written request for her services, which being given, the Restorer went to the assistance of the Manchuria; but her efforts, added to those of the other vessels, were unsuccessful, and on the next day an expert salvor employed by the underwriters with a powerful wrecking outfit started from San Francisco, arriving nine days after the stranding. In the meantime the Restorer and other vessels had assisted in keeping the Manchuria in position and from further injury, and she was retained by the expert who took charge of the work, and who understood that she was under employment, until the Manchuria was finally released. Throughout libelant and its representatives worked with a view to making as large a salvage claim as possible. The Restorer was at no time in any special peril, nor did it appear that her services were indispensable to the safety or rescue of the Manchuria. *Held*, that she was entitled to recover for her consumption and loss of stores and expenses on account of the salvage operations, and to a per diem allowance for the time employed, but to no bonus in addition as a purely salvage reward.

—Pacific Mail S. S. Co. v. Commercial Pacific Cable Co., 173 Fed. 28.. 97 C. C. A. 346

SATISFACTION.

See Payment.

SCHEDULE.

Of bankrupt, see Bankruptcy, § 4.

SEAMEN.

Rev. St. § 4596, as amended by Act Dec. 21, 1898, c. 28, § 19, 30 Stat. 760 (U. S. Comp. St. 1901, p. 3113), which provides that seamen for willful disobedience to lawful commands shall be punishable at the option of the master by being placed in irons and by a forfeiture of pay, and for continued willful disobedience by being placed in irons on bread and water until such disobedience shall cease, and also by a forfeiture of pay, does not deprive the master of authority in his discretion to impose a milder punishment.
—The Thrasher, 173 Fed. 258.....97 C. C. A. 424

In Rev. St. § 4596, as amended by Act Dec. 21, 1898, c. 28, § 19, 30 Stat. 760 (U. S. Comp. St. 1901, p. 3113), providing that offenses by seamen shall be punishable as therein prescribed, the word "punishable" does not mean "must be punished," but "may be punished" as therein provided.
—The Thrasher, 173 Fed. 258.....97 C. C. A. 424

An order of the master of a vessel requiring a seaman to go aloft and scrape the masts as a punishment for fighting in violation of orders, *held* within the master's discretion, and the placing of the seaman in irons with a stick under his knees and over his arms for his refusal to obey the first order, until he would consent to do so, not to entitle him to recover damages against the ship; the evidence being that it caused him no appreciable suffering.
—The Thrasher, 173 Fed. 258.....97 C. C. A. 424

SET-OFF AND COUNTERCLAIM.

Set-off against bankrupt's trustee, see Bankruptcy, § 3.

SETTLEMENT.

See Payment.

SHIPPING.

See Admiralty; Collision; Maritime Liens; Salvage; Seamen.

§ 1. Title.

A purchaser of a half interest in a steamer, which contracted to pay therefor one-half her cost, to be shown by an itemized bill to be furnished by the seller, and on the transfer of such half by a good and sufficient bill of sale free from liens, *held* not bound for the purchase price, where no bill of the cost nor bill of sale was tendered prior to the time when the vessel was lost.
—El Cambio Gold Mining Co. v. Cucharas Mining Co., 172 Fed. 366.. 97 C. C. A. 64

A mortgage given by a steamship company, covering all the vessels it then owned and all it should afterwards acquire, cannot bind after-acquired vessels, as against liens given by statute for their construction.
—American Trust Co. v. W. & A. Fletcher Co., 173 Fed. 471..... 97 C. C. A. 477

§ 2. Charters.

Bailees for hire of a scow, bound to exercise ordinary care to protect her from injury, are not liable for her injury by being pierced by a timber standing upright in the bottom under her, where she lay while being unloaded, where the place had been dredged and swept for obstructions but

a month before by the city, and where their own vessel, which was larger, had safely lain in the same position only five days before.
—Hastorf v. O'Brien, 173 Fed. 346.....97 C. C. A. 606

§ 3. **Carriage of goods.**
To entitle a shipper to recover for damage to cargo from heat, when liability for such damage is excepted in the bill of lading, the burden rests on him to show that the carrier was negligent in stowing or ventilating the cargo.
—The Baralong, 172 Fed. 220.....97 C. C. A. 24

When it is shown that goods, when delivered by a vessel which was the last carrier to the consignee, were deficient in quantity, the presumption is that the missing goods were delivered to such vessel, and the prima facie case so made out is not only one of liability against the owner, but of a maritime lien against the ship, and the burden rests upon her to prove that she delivered all that she received.
—The Ghazee, 172 Fed. 368.....97 C. C. A. 66

An exemption in a bill of lading of liability for loss of cargo by theft does not relieve the vessel, where there was negligence on her part which contributed to or facilitated the theft.
—The Ghazee, 172 Fed. 368.....97 C. C. A. 66

Where through bills of lading for boxes of bristles recited that the weight and quantity were unknown, the burden rests upon the shipper to show their weight, when received, in order to hold the last carrier liable for a claimed short weight in the quantity delivered.
—The Seneca, 172 Fed. 370.....97 C. C. A. 68

Evidence *held* sufficient to sustain a finding that the weight of a cargo of chalk carried by a vessel was in excess of that reported by the consignee and on which freight was paid.
—Bacon v. Conroy, 172 Fed. 532.....97 C. C. A. 158

§ 4. **Demurrage.**
The steamship Eva was chartered to carry a cargo of coal to be loaded at Philadelphia; the charter party providing for "customary steamer dispatch loading, steamer to take turn with other steamers loading coal." By the rules of the Greenwich coal pier, where she was to load, each vessel was required to register when ready to load, and was loaded in turn, unless she failed to dock when her berth was ready, in which case she lost her place and must re-register. The Eva registered, and her master was told by the charterer's agent that she could not be loaded for about a week. She then went to a shipyard to have some changes made in her bulkheads, which, however, were not necessary for her coal cargo, and could be suspended at any time on notice, and she could have reached the coal dock within an hour. When her turn for loading was reached, she was not notified; but another vessel was given her place apparently at the instance of the charterer, and she was delayed for several days. *Held* that, after registering, she was not required to remain anchored near the docks, but was within her rights in utilizing the time while waiting for repairs, and was entitled to reasonable notice when her turn to load came, and that the charterer was liable for demurrage for the time she was delayed.
—Bull v. United States Shipping Co., 173 Fed. 46...97 C. C. A. 364

SHIP'S LOG.

As documentary evidence in admiralty, see Admiralty, § 1.

SLANDER.

See Libel and Slander.

SPECIFIC PERFORMANCE.

§ 1. Good faith and diligence.

Where, under a contract by which one party agrees to sell and convey real estate on payment therefor at a stated time, and the other agrees to make such payment, and providing that, if payment is not made at the time stipulated, the purchaser shall forfeit all right and the seller be released from all obligation to convey, the purchaser has gone into possession and made valuable improvements on the property, a court of equity will decree a specific performance in his favor, notwithstanding his default in payment at the time promised, when there has been no change of circumstances or conditions to defeat his equity.

—Mound Mines Co. v. Hawthorne, 173 Fed. 882.....97 C. C. A. 394

STARE DECISIS.

See Courts, § 1.

STATEMENT.

By witness inconsistent with testimony, see Witnesses, § 2.

STATES.

Courts, see Courts.
Jurisdiction of state court to enforce maritime lien, see Maritime Liens, § 2.

STATUTES.

For statutes relating to particular subjects, see the various specific topics.
Adoption by United States courts of state laws as rules of decision, see Courts, § 2.
Laws denying equal protection of law, see Constitutional Law, § 2.
Laws impairing obligation of contract, see Constitutional Law, § 1.
Statute of frauds, see Frauds, Statute of.

§ 1. Construction and operation.

A penal statute, which creates and prescribes the punishment for a new offense, must be strictly construed.

One who was not beyond reasonable doubt by the express terms of the statute within the class of those punishable thereunder may not be brought within it after the event by interpretation.

Ex post facto law by judicial construction is as pernicious as ex post facto legislation.

—Erbaugh v. United States, 173 Fed. 433.....97 C. C. A. 663

STATUTES CONSTRUED.

UNITED STATES.

CONSTITUTION.

Amend. 5 172

STATUTES AT LARGE.

1875, March 3, ch. 131, § 15, 18 Stat. 420 (U. S. Comp. St. 1901, p. 1419)..... 139

1887, Feb. 4, ch. 104, § 2, 24 Stat. 379 (U. S. Comp. St. 1901, p. 3155) 383

1887, Feb. 4, ch. 104, § 8, 24 Stat. 382 (U. S. Comp. St. 1901, p. 3159) 383, 384

1887, Feb. 8, ch. 119, § 6, 24 Stat. 390 139

1889, Jan. 14, ch. 24, 25 Stat. 642 139

1890, July 2, ch. 647, § 1, 26 Stat. 209 (U. S. Comp. St. 1901, p. 3200) 454, 578, 579
1890, July 2, ch. 647, § 2, 26 Stat. 209 (U. S. Comp. St. 1901, p. 3200) 454
1893, March 2, ch. 196, § 2, 27 Stat. 531 (U. S. Comp. St. 1901, p. 3174) 284
1897, June 7, ch. 3, 30 Stat. 62 139
1897, July 24, ch. 11, § 1, Schedule I, par. 302, 30 Stat. 175 (U. S. Comp. St. 1901, p. 1655) 469
1897, July 24, ch. 11, § 1, Schedule I, par. 320, 30 Stat. 179 (U. S. Comp. St. 1901, p. 1661) 40
1897, July 24, ch. 11, § 1, Schedule J, par. 339, 30 Stat. 181 (U. S. Comp. St. 1901, p. 1662) 41
1897, July 24, ch. 11, § 7, 30 Stat. 205 (U. S. Comp. St. 1901, p. 1693) 469
1898, July 1, ch. 541, § 2 (3), 30 Stat. 545 (U. S. Comp. St. 1901, p. 3421) 51
1898, July 1, ch. 541, § 4b, 30 Stat. 547 (U. S. Comp. St. 1901, p. 3423) 647
1898, July 1, ch. 541, § 8a, 30 Stat. 549 (U. S. Comp. St. 1901, p. 3425) 536
1898, July 1, ch. 541, § 21a, 30 Stat. 552 (U. S. Comp. St. 1901, p. 3430) 116
1898, July 1, ch. 541, § 24a, 30 Stat. 553 (U. S. Comp. St. 1901, p. 3431) 535
1898, July 1, ch. 541, § 60b, 30 Stat. 562 (U. S. Comp. St. 1901, p. 3445) 161
1898, July 1, ch. 541, § 68b, 30 Stat. 565 (U. S. Comp. St. 1901, p. 3450) 155
1898, Dec. 21, ch. 28, § 19, 30 Stat. 760 (U. S. Comp. St. 1901, p. 3113) 424
1901, Feb. 6, ch. 217, 31 Stat. 760 139
1903, March 2, ch. 978, 32 Stat. 944 429
1904, April 28, ch. 1778, 33 Stat. 529 429
1906, June 11, ch. 3073, § 1, 34 Stat. 232 (U. S. Comp. St. Supp. 1907, p. 891) 392
1906, June 29, ch. 3591, § 7, 34 Stat. 595 (U. S. Comp. St. Supp. 1907, p. 909) 198
1908, April 22, ch. 149, 35 Stat. 65 392

REVISED STATUTES.

§ 720 (U. S. Comp. St. 1901, p. 581) 611
§ 723 (U. S. Comp. St. 1901, p. 583) 214
§ 1025 (U. S. Comp. St. 1901, p. 720) 172
§ 1782 (U. S. Comp. St. 1901, p. 1212) 421
§ 2324 (U. S. Comp. St. 1901, p. 1426) 587
§ 4596. Amended by Act 1898, Dec. 21, ch. 28, § 19, 30 Stat. 760 (U. S. Comp. St. 1901, p. 3113) 424
§ 4887 (U. S. Comp. St. 1901, p. 3382) 289, 290
§ 4922 (U. S. Comp. St. 1901, p. 3396) 25
§§ 5209, 5239 (U. S. Comp. St. 1901, pp. 3497, 3515) 271
§ 5480 (U. S. Comp. St. 1901, p. 3696) 462, 663

COMPILED STATUTES 1901.

Page 581 611
Page 583 214
Page 720 172
Page 1212 421
Page 1419 139
Page 1426 587
Page 1655 469
Page 1661 40
Page 1662 41
Page 1693 469
Page 3113 424
Page 3155 383
Page 3159 ..... 383, 384
Page 3174 284
Page 3200 ..... 454, 578, 579
Page 3382 ..... 289, 290
Page 3396 25
Page 3421 51
Page 3423 647
Page 3425 536
Page 3430 116
Page 3431 535
Page 3445 161
Page 3450 155
Pages 3497, 3515 271
Page 3696 ..... 462, 663

COMPILED STATUTES SUPP. 1907.

Page 891 392
Page 909 198

TREATIES.

With Brussels, Dec. 14, 1900, 32 Stat. 1936 290

CALIFORNIA.

CIVIL CODE.

§ 536 252

PENAL CODE.

§ 591 251

POLITICAL CODE.

§ 4480 251

COLORADO.

MILLS' ANNOTATED STATUTES, REVISED SUPPLEMENT.

Volume 3.

§ 3927t 3

REVISED STATUTES 1908.

§ 865 551

KANSAS.

GENERAL STATUTES 1901.

§§ 5857, 5858 500

GENERAL STATUTES 1905.

§ 4909 288
§§ 6312, 6313 618

MISSOURI.

REVISED STATUTES 1899.

§§ 2933, 2946 (Ann. St. 1906, pp. 1690, 1698) 536
§ 3404 (Ann. St. 1906, p. 1936) 548

ANNOTATED STATUTES 1906.

§§ 2933, 2946 536
§ 3404 548

NEBRASKA.

CONSTITUTION.

Art. 11, § 4 198

CODE OF CIVIL PROCEDURE.

§ 333 124

COMPILED STATUTES 1901.

§ 5907 124

LAWS.

1907, ch. 48, §§ 1, 2 124

NEW JERSEY.

GENERAL STATUTES 1895.

Volume 2.

Page 1960 478

LAWS.

1857, p. 382 478
1878, p. 158 478
1884, p. 248 478

NEW YORK.

CODE OF CIVIL PROCEDURE.

§ 177 56

OHIO.

CONSTITUTION.

Art. 1 520

REVISED STATUTES 1908.

§§ 3231—1, 3207 520

PENNSYLVANIA.

LAWS.

1874, p. 108 144

TENNESSEE.

SHANNON'S CODE.

§ 1574, subsec. 4 560

WASHINGTON.

BALLINGER'S ANNOTATED CODES & STATUTES.

§ 4099 (Pierce's Code, § 5139) 591
§ 4828 (Pierce's Code, § 256) 443
§ 4829 (Pierce's Code, § 257) 392

PIERCE'S CODE.

§ 256 (Ballinger's Ann. Codes & St. § 4828) 443
§ 257 (Ballinger's Ann. Codes & St. § 4829) 392
§ 5139 (Ballinger's Ann. Codes & St. § 4099) 591

STIPULATIONS.

As to appeal, see Appeal and Error, § 1.

A stipulation to settle controversies or to assist a court in deciding them ought not to be discouraged by a narrow and unreasonable construction that would defeat the manifest intention of one of the parties, acceded to by the other.
—Arkansas Valley Sugar Beet & Irrigated Land Co. v. Ft. Lyon Canal Co., 173 Fed. 601 ..... 97 C. C. A. 551

STOCKHOLDERS.

Of corporations, see Corporations, § 2.

STREET RAILROADS.

See Railroads.
Carriage of passengers, see Carriers.
Construction of contracts between lessor and lessee of street railroad, see Contracts, § 2.

§ 1. Regulation and operation.
A street railway company is not chargeable with negligence, which renders it liable for the killing of a passenger in an automobile by a collision between such machine and a car at a street crossing, where the car was not being run at an excessive speed, and the automobile, which had been proceeding along the same street a short distance ahead of the car, suddenly turned across the track so close to the car that the motorman could not stop before the collision occurred, a movement which he was not bound to anticipate.
—Dale v. Denver City Tramway Co., 173 Fed. 787...97 C. C. A. 511

SUBROGATION.

Where certain stock was purchased by a bank's vice president and another in separate shares, and all of the stock was pledged for a loan to both, the bank, being compelled to pay the whole loan in order to release its share of the stock, was subrogated to the rights of the pledgee as against the balance.
—Metropolitan Trust Co. of New York v. McKinnon, 172 Fed. 846.. 97 C. C. A. 194

SUPREME COURTS.

See Courts, § 2.

TARIFF.

See Customs Duties.

TAXATION.

See Customs Duties.
License taxes, see Licenses, § 1.
Report by railroad to taxing officers as evidence, see Evidence, § 1.

§ 1. Liability of persons and property.
Under section 3927t, Mills' Ann. St. Rev. Supp. Colo., live stock brought into a county between September 1st and December 31st of one year, and shipped out between January 1st and April 1st of the succeeding year, is taxable in that county for the latter year.
—Atchison, T. & S. F. Ry. Co. v. Sullivan, 173 Fed. 456..... 97 C. C. A. 1

§ 2. Levy and assessment.
Where the basis of assessing the property of a railroad company in a state for taxation prescribed by statute and followed is to ascertain the value of its corporate plant used or convenient for operating its railroad, wherever situated, excluding its property not necessary or convenient for that purpose which is otherwise assessed, and then to take such a portion of that value as the number of miles of its main track in the state bears to the number of miles of its entire main track, the current cash value of all the obligations which constitute its funded debt, and of all its outstanding shares of stock, are competent evidence of the value of its corporate plant, and, in connection with its entire mileage and its mileage in

the state, more persuasive evidence of the value of that part of its corporate plant in the state, than the cost of reproduction of its tangible property therein.
—Atchison, T. & S. F. Ry. Co. v. Sullivan, 173 Fed. 456..... 97 C. C. A. 1

Evidence of the value of property not necessary for railroad purposes, and that parts of the corporate plant of a railroad company, including its various terminals, are of exceptional value, is competent, and, when offered, must be given effect by the assessing board and by the court in ascertaining the value of its corporate plant in the state.
But in the absence of such evidence the presumption is that all its property is part of its corporate plant, and that its tangible and intangible property are equally distributed throughout its mileage.
—Atchison, T. & S. F. Ry. Co. v. Sullivan, 173 Fed. 456..... 97 C. C. A. 1

The intangible property of an operating railroad company, its franchises, contracts, privileges, and good will, are presumptively combined unavoidably and inextricably with, automatically distributed to, and they enhance the value of, every part of its tangible corporate plant.
—Atchison, T. & S. F. Ry. Co. v. Sullivan, 173 Fed. 456..... 97 C. C. A. 1

§ 3. Collection and enforcement against persons or personal property.
A systematic, intentional, continuing omission or undervaluation of other taxable property, in violation of the Constitution or statute, by the taxing officers of a state or county, pursuant to a rule or practice adopted by them, the inevitable effect of which is an unjust discrimination in taxation against the property of complainant, and against other property similarly situated, will sustain a bill in equity in a national court to enjoin the collection of the tax based on the illegal discrimination.
—Atchison, T. & S. F. Ry. Co. v. Sullivan, 173 Fed. 456..... 97 C. C. A. 1

The adequate remedy at law, which will deprive a court of equity of jurisdiction, must be as certain, complete, prompt, and efficient to attain the ends of justice as the remedy in equity.
And in a case of this nature the payment of the illegal portion of the tax and the prosecution of an action at law to recover it back is neither as prompt, certain, complete, nor efficient a remedy as a suit for an injunction against its collection.
—Atchison, T. & S. F. Ry. Co. v. Sullivan, 173 Fed. 456..... 97 C. C. A. 1

The law presumes that every man intends the natural and inevitable effect of his deeds, and that taxing officers who intentionally omit or undervalue other taxable property in violation of the Constitution or the statute, so that an undue share of the burden of taxation is necessarily thrown upon the property of complainant, intended to discriminate against its property. It is not necessary to its cause of action that the officers should have had any such actual intention, for their acts were as injurious and as remediable without as with that intention.
—Atchison, T. & S. F. Ry. Co. v. Sullivan, 173 Fed. 456..... 97 C. C. A. 1

Parties to a suit who admit in their pleadings that the actual value of property was far in excess of its assessed value are estopped from invoking, to sustain the assessment, the rule that where the determination of an issue of fact, like the valuation of property for taxation, is intrusted by statute to the judgment of an officer or a board, his or its decision raises more than a presumption of fact, and may not be overthrown by the testimony of two or three witnesses.
—Atchison, T. & S. F. Ry. Co. v. Sullivan, 173 Fed. 456..... 97 C. C. A. 1

Where the property of the complainant and of others whose property is subject to a like levy for taxation is illegally underassessed to substantially the same extent. the complainant is entitled to no relief. Resulting legal injury, continuing or threatening, is as essential to relief in equity as causal wrong.
—Atchison, T. & S. F. Ry. Co. v. Sullivan, 173 Fed. 456..... 97 C. C. A. 1

TELEGRAPHS AND TELEPHONES.

Decision of state court construing statute relating to telegraph companies as authority in United States court, see Courts, § 2.
Laws impairing contract of telephone company to use street, see Constitutional Law, § 1.

§ 1. Establishment, construction, and maintenance.
Where a telephone company is authorized by its charter to do an interstate business, and uses its lines for that purpose, a right to build and maintain such lines in the streets of a city for that purpose, conferred by statute, is not limited nor affected by the fact that they are also used to transact local or intrastate business.
—Sunset Telephone & Telegraph Co. v. City of Pomona, 172 Fed. 829 .....97 C. C. A. 251

TERMS.

Of patents, see Patents, § 3.

TIME.

For performance of contract, see Contracts, § 2.

TITLE.

Color of title, see Adverse Possession.
Effect of adverse possession, see Adverse Possession, § 2.
To minerals, see Mines and Minerals, § 2.
To vessel, see Shipping, § 1.

TOOLS.

Liability of employer for defects, see Master and Servant, § 1.

TORTS.

Liabilities of particular classes of persons.

Employés, see Master and Servant, § 2.

Particular torts.

See False Imprisonment, § 1; Fraud; Libel and Slander; Negligence.
Causing death, see Death, § 1.
Maritime torts, see Collision.

TOWAGE.

Collisions with tugs and vessels in tow, see Collision, § 2.

TOWNS.

See Municipal Corporations.

TRADE-MARKS AND TRADE-NAMES.

Jurisdiction of United States courts to restrain infringement of trade-mark, see Courts, § 2.

§ 1. Marks and names subjects of ownership.

That a trade-mark, consisting of a check figure formed by intersecting lines impressed on the bevel face beneath the edge of horseshoe nails, was an ornamental device which added to the appearance of the nails, and also came to represent quality, did not prevent it from operating as a valid trade-mark.
—Capewell Horse Nail Co. v. Mooney, 172 Fed. 826..97 C. C. A. 248

A trade-mark "Holeproof" used in the manufacture and sale of hosiery is not objectionable as descriptive.
—Holeproof Hosiery Co. v. Wallach Bros., 172 Fed. 859..... 97 C. C. A. 263

§ 2. Infringement and unfair competition.

In a suit for infringement of a trade-mark, objection to the validity of complainant's registration of the mark was not material where complainant had a common-law trade-mark in the device alleged to have been infringed.
—Capewell Horse Nail Co. v. Mooney, 172 Fed. 826..97 C. C. A. 248

Infringement of complainant's trade-mark on horseshoe nails to simulate complainant's nails, and produce confusion in the minds of dealers and users, was unfair competition.
—Capewell Horse Nail Co. v. Mooney, 172 Fed. 826..97 C. C. A. 248

It was no defense to a suit to restrain the infringement of plaintiff's trade-mark consisting of a check figure formed of intersecting lines impressed on the bevel face beneath the heads of horseshoe nails that such mark was produced while the nail was passing through one of the rolls of the manufacturing machinery by which the nail was gripped and held in place; it not appearing that the pattern of the gripping surface of the roll was required to be the same as the trade-mark stamped on complainant's nails in order to their successful manufacture.
—Capewell Horse Nail Co. v. Mooney, 172 Fed. 826..97 C. C. A. 248

The word "Knotair" is not an infringement of the word "Holeproof" as applied to the manufacture and sale of hosiery.
—Holeproof Hosiery Co. v. Wallach Bros., 172 Fed. 859..... 97 C. C. A. 263

Manufacturers of hosiery under the name "Holeproof" are not precluded from an injunction protecting the use of such name by the fact that it is false and misleading; it being merely a boastful and fanciful word not intended as a representation that the hose manufactured and sold by complainant thereunder would never wear out.
—Holeproof Hosiery Co. v. Wallach Bros., 172 Fed. 859..... 97 C. C. A. 263

Where, in a suit to restrain the infringement of plaintiff's trade-mark and for unlawful competition, there was some evidence that defendants had sold hose of other manufacture for "Holeproof" hose of complainant's manufacture, a preliminary injunction restraining sales of such goods unless the customer is informed that the goods offered are not complainant's was proper.
—Holeproof Hosiery Co. v. Wallach Bros., 172 Fed. 859..... 97 C. C. A. 263

TRADE-MARKS AND TRADE-NAMES ADJUDICATED.

"Holeproof."—Holeproof Hosiery Co. v. Wallach Bros.....263
"Knotair."—Holeproof Hosiery Co. v. Wallach Bros.....263

TREATIES.

By the convention concluded at Brussels December 14, 1900, by the International Conference for the Protection of Industrial Property, at which the United States was represented, it was among other things ordained: "Art. 4 bis. Patents applied for in the different contracting states by persons admitted to the benefit of the convention under the terms of articles 2 and 3 shall be independent of the patents obtained for the same invention in the other states, adherents or nonadherents to the Union. This provision shall apply to patents existing at the time of its going into effect. The same rule applies in the case of adhesion of new states to patents already existing on both sides at the time of the adhesion." This convention was ratified by the Senate March 7, 1901, and proclaimed by the President to go into effect September 14, 1902. 32 Stat. 1936. *Held*, that such treaty was self-executing, and the effect of its ratification was a complete doing away with the interdependence of foreign and domestic patents, and of the limitation imposed on the term of domestic patents for inventions previously patented in foreign countries by Rev. St. § 4887, prior to its amendment in 1897 (U. S. Comp. St. 1901 p. 3382). Per Archbald, District Judge, and Gray, Circuit Judge, concurring.
—Hennebique Const. Co. v. Myers, 172 Fed. 869.....97 C. C. A. 289

TRESPASS.

On mineral lands, see Mines and Minerals, § 2.
To the person, see False Imprisonment.

TRESPASS TO TRY TITLE.

See Ejectment.

TRIAL.

See Witnesses.

Trial of particular civil actions or proceedings.

See Libel and Slander, § 3.
For infringement of patent, see Patents, § 5.
For injuries caused by operation of railroad, see Railroads, § 1.
For injuries to servant, see Master and Servant, § 1.

Trial of criminal prosecutions.

See Criminal Law, § 2.
For violation of postal laws, see Post Office, § 1.

§ 1. Taking case or question from jury.

Where the question whether the watchman at a railroad crossing lowered the gates while a certain train was passing might have had a bearing on a case on trial, and the watchman's testimony was contradictory, the question was one for the jury.
—Erie R. Co. v. Schultz, 173 Fed. 759.....97 C. C. A. 573

The objection that a plaintiff did not give a notice which was an essential condition precedent to the right to bring the action need not be pleaded, but may be made on motion for a directed verdict at the close of the proof.
—Simerson v. St. Louis & S. F. R. Co., 173 Fed. 612..97 C. C. A. 618

§ 2. **Instructions to jury.**
The refusal of an instruction as to the assumption of risk, requested by defendant in an action by a servant for a personal injury, *held* not error, in view of the charge given, which sufficiently covered the subject.
—Griffin Wheel Co. v. Smith, 173 Fed. 245.....97 C. C. A. 411

§ 3. **Waiver and correction of irregularities and errors.**
The defendant waives a demurrer to the plaintiff's evidence, or a denial of its motion for judgment on the ground that the plaintiff's evidence establishes no cause of action, by the subsequent introduction of evidence to the merits on its own behalf.
—American Smelting & Refining Co. v. Karapa, 173 Fed. 607.....
97 C. C. A. 517

TROVER AND CONVERSION.

Conversion of mineral, see Mines and Minerals, § 2.

TRUST DEEDS.

See Chattel Mortgages.

TRUSTEE.

In bankruptcy, see Bankruptcy, § 3.

TRUSTS.

Combinations to monopolize trade, see Monopolies, § 1.

ULTRA VIRES.

Act of bank, see Banks and Banking, §§ 1, 2.
Act of corporation, see Corporations, § 3.

UNFAIR COMPETITION.

See Trade-Marks and Trade-Names, § 2.

UNITED STATES.

See Customs Duties; Post Office.
Courts, see Courts, §§ 2, 3.
Indians, see Indians.

VALUE.

Limits of jurisdiction, see Courts, § 2.

VENDOR AND PURCHASER.

See Sales.
Specific performance of contract, see Specific Performance.

§ 1. Requisites and validity of contact.
A contract by which one party agrees to sell and convey real estate on payment therefor at a stated time, and the other agrees to make such payment, although it also provides that if payment is not made at the time stipulated the purchaser shall forfeit all right and the seller be released from all obligation to convey, is not one giving an option, but one of bargain and sale.
—Mound Mines Co. v. Hawthorne, 173 Fed. 882.....97 C. C. A. 394

VENUE.

Of actions for causing death, see Death, § 1.

VERDICT.

Directing verdict in civil actions, see Trial, § 1.

VESSELS.

Maritime liens on for building, see Maritime Liens, §§ 1, 2.
Sale of, see Shipping, § 1.

VICE PRINCIPALS.

See Master and Servant, § 1.

VILLAGES.

See Municipal Corporations.

WAIVER.

See Estoppel.
Of objections at trial, see Trial, § 3.
Of right to appeal, see Appeal and Error, § 1.
Of right to damages for delay in performance of contract of sale, see Sales, § 3.

WARRANT.

Authority to arrest without warrant, see Arrest, § 1.

WATERS AND WATER COURSES.

Jurisdiction of equity to restrain injury by flooding caused by waterworks in Mexico, see Equity, § 1.
Violation of injunction against injuries by flooding, see Injunction, § 3.

§ 1. Appropriation of rights in public lands.
The development and maintenance of an electric power plant to be operated by water power is a "beneficial use" of the water, within the

meaning of Ballinger's Ann. Codes & St. Wash. § 4099 (Pierce's Code, § 5139), and water previously appropriated from a stream under the statute may lawfully be applied to such purpose.
—Thompson Co. v. Pennebaker, 173 Fed. 849.....97 C. C. A. 591

Plaintiff assigned to defendant a contract giving an option to purchase certain water rights and land connected therewith, under an agreement that, if defendant should "dispose of or use the said option to its benefit, directly or indirectly," it should pay plaintiff therefor the sum of $10,000. Defendant organized another corporation, of which it owned all the stock, to which it assigned the option, and which took steps to acquire the property and went into possession. *Held*, that such action was a beneficial use of the option, which entitled plaintiff to recover the stipulated price therefor.
—Thompson Co. v. Pennebaker, 173 Fed. 849.....97 C. C. A. 591

Water rights acquired by appropriation of public waters and possessory rights in public lands are valuable rights, capable of being transferred, and may be a lawful subject of contracts of sale, and a defendant, which purchased an option to buy such rights, which it exercised by paying in part therefor and going into possession and expending money in developing the property, cannot defend against an action to recover the stipulated price for the option on the ground that the vendor did not have the legal title to the property.
—Thompson Co. v. Pennebaker, 173 Fed. 849.....97 C. C. A. 591

§ 2. Conveyances and contracts.
A contract giving an option for the purchase of certain lands and water rights sufficiently described the same for identification, where it gave the section on which they were located, recited that the water rights had been appropriated by the seller under the law of Washington and recorded as required by such law in the county records, and further described the lands as sufficient lands "in and about said water rights" for the construction of a power house, etc.
—Thompson Co. v. Pennebaker, 173 Fed. 849.....97 C. C. A. 591

§ 3. Artificial ponds, reservoirs, and channels, dams, and flowage.
A court of equity has jurisdiction to enjoin the diversion of water from a stream by means of canals, whereby the property of complainant is flooded and threatened with irreparable injury.
—The Salton Sea Cases, 172 Fed. 792; California Development Co. v. New Liverpool Salt Co., Id.....97 C. C. A. 214

A court of equity has jurisdiction to enjoin the maintenance of works which caused the flooding and injury of lands owned by complainant, notwithstanding the fact that pending the suit the flooding continued and entirely destroyed the present value of the property for which damages were awarded; the title to the land still remaining in complainant.
—The Salton Sea Cases, 172 Fed. 792; California Development Co. v. New Liverpool Salt Co., Id.....97 C. C. A. 214

§ 4. Public water supply.
Defendant corporation undertook to divert water from the Colorado river near the boundary line between California and Mexico through canals for irrigation purposes. It contracted with a Mexican company, which it owned, and with other local irrigation companies which it organized in California, to deliver water to their canals and ditches. It constructed three intakes from the river, two of which were on Mexican territory on land of the Mexican company and nominally under its control, but which were, in fact, constructed and controlled by defendant. These intakes were so constructed without controlling gates that in a time of flood one of those in Mexico was so enlarged by washing that a large part of the water of the river poured through and passing through canals of the other companies overflowed and damaged, and finally destroyed the property of complainant situated in the Salton Basin below the level of the river. *Held*, that having sole control of the intakes, from the

improper construction of which the damage resulted, defendant was responsible therefor, and that to a suit to enjoin further flooding and to recover for the damage done the other corporations were not necessary parties.

—The Salton Sea Cases, 172 Fed. 792; California Development Co. v. New Liverpool Salt Co., Id.....97 C. C. A. 214

An irrigation company which negligently constructed the intakes from the Colorado river into its canal without headgates or other means of controlling the flow, by reason of which in a time of flood the water flowed through in such volume as to wash away the river bank and overflow the lands of others, is not relieved from liability therefor by the fact that the flood was extraordinary.

—The Salton Sea Cases, 172 Fed. 792; California Development Co. v. New Liverpool Salt Co., Id.....97 C. C. A. 214

The owner of certain lands and water rights constructed a canal to carry the waters from his land to lower lands, and entered into contracts with the owners of such lands by which he sold and conveyed to each a certain quantity of water, measured at the canal. The contracts provided that "it is understood and agreed * * * that water as above stipulated has been actually delivered to the vendee, and that said delivery and this conveyance are accepted by vendee in full satisfaction of all obligations of vendor to vendee." All of them also provided, in effect, that "vendee hereby covenants and agrees to bear his proportionate share of taxes and all expenses of maintaining and operating said canal system and all water sources and water rights and structures that may be connected therewith." *Held*, that such contracts must be construed to require the vendor to furnish continuously the stipulated quantity of water, and the covenants of the vendees to bear a proportionate share of the expenses related to the expenses of delivery only, and did not bind them to contribute to the expense of producing the water, or procuring additional sources of supply, when by reason of drouth the original supply became inadequate to fill the contracts.

—Riverside Trust Co. v. East Riverside Water Co., 173 Fed. 241.... 97 C. C. A. 407

WIDOWS.

Dower, see Dower.

WITNESSES.

See Depositions; Evidence.
Experts, see Evidence, § 3.
Opinions, see Evidence, § 3.

§ 1. Competency.

Where plaintiff's leg was crushed by being run over by a car of one of defendant's railroad trains, which facts were known and not in dispute, a statement made by plaintiff to defendant's physician who came to treat his injury as to the manner in which his foot came to be caught under the wheel was not a privileged communication within Civ. Code Neb. § 333 (Comp. St. Neb. 1901, § 5907), which prohibits a physician from disclosing "any confidential communication properly intrusted to him in his professional capacity and necessary and proper to enable him to discharge the functions of his office," having no relation to the treatment of the injury, and the exclusion of such statement when offered in evidence was error.

—Missouri Pac. Ry. Co. v. Castle, 172 Fed. 841.....97 C. C. A. 124

§ 2. Credibility, impeachment, contradiction, and corroboration.

Where a party has been surprised by the testimony of his own witness, he may, in the discretion of the court, be allowed to offer evidence to

show that prior to the trial the witness made a contradictory statement, not for the purpose of impeaching the general character of the witness, but for the protection of the party calling him; but where the previous statement is in writing, and the party has been permitted to call the attention of the witness to the parts which contradict his testimony, it is not an abuse of discretion to exclude the entire statement, when offered in evidence for impeaching purposes.
—Griffin Wheel Co. v. Smith, 173 Fed. 245.....97 C. C. A. 411

It is not competent for a party to an action to introduce in evidence the testimony of one of his witnesses to the effect that the reputation of another of his witnesses for integrity, veracity, ability, and standing is high, in the absence of evidence assailing his reputation.
—Central Coal & Coke Co. v. Penny, 173 Fed. 340....97 C. C. A. 600

WRITS.

See Injunction.
Writ of error, see Appeal and Error.

[End of Volume.]